UNCONTROLLED DOCUMENT

UNCONTROLLED DOCUMENT



10. De-Icing Procedures

Revision: 1
Date: 17 September 2024

10.0 De-Icing Procedures

10.1 Technical References

10.2 Operational Policy

10.3 Low Temperature Operations

10.4 Staff Training and Qualification

10.5 Fluid Handling and Storage

10.6 Holdover Time (Hot Charts)

10.7 Quality Assurance Program

10.8 Recommended DHL Practice

10.9 Responsibilities

10.10 Communications

10.11 Fluid Application

10.12 Precautions

10.13 Cold-Soak Effect

10.14 Cold Dry Snow or Ice Crystals

10.15 General Safety

10.16 Brushes

10.17 Forced Air

10.18 No Spray Areas

UNCONTROLLED DOCUMENT (26 SEPTEMBER 2024 15:09:27)

UNCONTROLLED DOCUMENT

Page	Date	Comment
2	17 September 2024	SAE links updated *(Minor)*
3	17 September 2024	Reference updated from AS6286C to AS6286D *(Minor)*

UNCONTROLLED DOCUMENT

UNCONTROLLED DOCUMENT

UNCONTROLLED DOCUMENT

10.0 De-Icing Procedures

DHL De-icing / Anti-icing procedures are based upon those published by the Society of Automotive Engineers (SAE) Standard AS6285 “Aircraft Ground De-Icing / Anti-Icing Processes” and the Federal Aviation Administration Standardised International Ground De-ice Program and shall apply according to regulatory oversight responsibilities.

The following SAE Standards shall be applied by De-/ Anti-Icing Service providers, the latest edition of the Standard shall be maintained at each station where de-icing is conducted from **www.sae.org**

AS 6285 E:

AS6285E: Aircraft Ground Deicing/Anti-Icing Processes - SAE International

AS 6286 D:

AS6286D: Aircraft Ground Deicing/Anti-Icing Training and Qualification Program - SAE International

AS 6332 A:

AS6332A: Aircraft Ground Deicing/Anti-Icing Quality Management - SAE International

Note 1:

The latest version of the “EAT De-Icing Manual” is downloadable from Web Manuals: **EAT De-Icing Manual 2024-25**

Note 2:

The latest version of the “FAA Hold Over Tables” is downloadable from Web Manuals.

Note 3:

The latest version of the “FAA Regression Information” is downloadable from Web Manuals.

Note 4:

The latest version of the “Transport Canada Hold-over Time (HOT) Guidelines” is downloadable from Web Manuals.

Note 5:

The latest version of the “Transport Canada - Regression Information” is downloadable from Web Manuals.

UNCONTROLLED DOCUMENT

UNCONTROLLED DOCUMENT

UNCONTROLLED DOCUMENT (26 SEPTEMBER 2024 15:09:27)

UNCONTROLLED DOCUMENT

10.1 Technical References

The information contained in this document is based on the requirements defined in EASA OPS CAT.OP.MPA.250 and FAR CFR-14 121.629, and is consistent with the following published recommendation and standards:

- SAE Standard AS6285E “Aircraft Ground De-Icing / Anti-Icing Processes” The FAA Standardised International Aircraft Ground Deice Program
- SAE Standard AS6286D Training and Qualification Program for De- / Antiicing of Aircraft on the Ground
- Federal Aviation Administration Hold-over times guidelines latest edition

UNCONTROLLED DOCUMENT

UNCONTROLLED DOCUMENT

UNCONTROLLED DOCUMENT (26 SEPTEMBER 2024 15:09:27)

UNCONTROLLED DOCUMENT

10.2 Operational Policy

The rules governing aircraft cold weather operations are very specific and must be strictly adhered to.

The ‘clean aircraft concept’ shall be adopted for all DHL operations.

No pilot may attempt Take-off in any aircraft that has:

- Frost snow or ice adhering to any propeller, windshield, power plant installation or airspeed, altimeter, rate of climb sensor or attitude instrument system
- Snow or ice adhering to the wing, stabilising or control surfaces
- Frost adhering to the upper surface of the wings, vertical and horizontal stabilisers and control surfaces

The De-Icing procedures as described in this manual are designed to ensure the safest possible operation can be maintained during snow and ice conditions.

UNCONTROLLED DOCUMENT

UNCONTROLLED DOCUMENT

UNCONTROLLED DOCUMENT (26 SEPTEMBER 2024 15:09:27)

UNCONTROLLED DOCUMENT

10.3 Low Temperature Operations

In addition to De-icing, further precautions need to be taken in freezing conditions. See DHLAGOM **3.3.8 - Freezing Conditions** for more information.

UNCONTROLLED DOCUMENT

UNCONTROLLED DOCUMENT

UNCONTROLLED DOCUMENT (26 SEPTEMBER 2024 15:09:27)

UNCONTROLLED DOCUMENT

10.4 Staff Training and Qualification

Standardised training:

For guidelines see SAE AS6286D Training and Qualification Program for De- / Anti-icing of Aircraft on the Ground

The complete SAE training procedures are not listed below and shall be maintained by accessing **www.sae.org** by stations conducting de-icing functions.

Available DHL training courses can be found in DHLAGOM **8. Training Standards**.

De-icing/anti-icing procedures must be carried out exclusively by personnel trained and qualified on this subject.

Companies providing de-icing/anti-icing services shall have both a qualification programme and a Quality Assurance Programme to monitor and maintain an acceptable level of competence.

All training must be in accordance with the SAE Standard teaching plans.

10.4.1 Training Requirements

Training programs must include a detailed description of initial and annual recurrent training and qualification concerning the specific requirements of the program and the duties, responsibilities, and functions detailed in the program. An ongoing review plan is advisable to evaluate the effectiveness of the deicing/anti-icing training received. The program shall have a tracking system that ensures all required personnel have been satisfactorily trained. Records of personnel training and qualification shall be maintained as proof of qualification. Where an individual has passed an examination but has not achieved a perfect grade, it is recommended that incorrect answers are reviewed with the individual to promote error-free learning. The training shall be divided into different groups according to levels of qualification and operational expertise.

Both initial and annual recurrent training for flight crews and ground crews shall be conducted to ensure that all such crews obtain and retain a thorough knowledge of aircraft de-icing/anti-icing policies and procedures, including new procedures and lessons learned. Competence shall be assessed by examination which shall cover all training subjects laid down in **10.4.2 - Training Subjects**.

The theoretical examination shall be in accordance with applicable requirements as stipulated by the regulatory agencies, e.g. FAA or EASA. The pass mark shall be 75% and only persons passing this examination can be qualified.

For personnel performing the actual de-icing/anti-icing treatment on aircraft, practical training with the de-icing/anti-icing equipment and an aeroplane shall be included. An aircraft is required in order to familiarize trainees with the relevant typical aircraft surfaces / components and identification of no spray areas. For initial training, a full practical training on the de-icing equipment and aircraft types relevant to that location is required. For recurrent annual training, a refresher practical training on at least one aircraft type shall be conducted prior to the trainees' demonstration of competence. If there have been any changes to de-icing equipment or methods, recurrent trainees shall receive a full practical training.

Prior to receiving final qualification, personnel performing de-icing/anti-icing operations (driving and/or spraying) shall demonstrate competence in removing frozen contamination under operational conditions, to a qualified trainer or supervisor. Details of this assessment shall be recorded.

UNCONTROLLED DOCUMENT (26 SEPTEMBER 2024 15:09:27)

UNCONTROLLED DOCUMENT

10.4.2 Training Subjects

Training shall include, but is not limited to, the following subjects:

a) Common standards, regulations, and recommendations
b) Basic knowledge of aircraft performance
c) Effects of frost, ice, snow, slush, and fluids on aircraft performance
d) Meteorological considerations on ice formation
e) Basic characteristics of aircraft deicing/anti-icing fluids, including causes and consequences of fluid degradation and residues
f) General techniques for removing deposits of frost, ice, slush, and snow from aircraft surfaces and for anti-icing
g) Deicing/anti-icing procedures in general and specific measures to be performed on different aircraft types and deicing using hot air
h) Aircraft in general and common critical areas
i) Types of checks required
j) Deicing/anti-icing equipment and facilities operating procedures including actual operation
k) Safety precautions and Human Factors
l) Emergency procedures
m) Fluid application and limitations of holdover time tables
n) Deicing/anti-icing codes and communication procedures
o) Environmental considerations
p) New procedures, new development and alternative technology, lessons learned from previous winters
q) Conditions which can lead to the formation of ice on the aircraft
r) Local rules and restrictions
s) Airport operational procedures and ATC
t) Quality control

Note 1:

Refer to the SAE AS6286D Training and Qualification Program for De- / Anti-icing of Aircraft on the Ground for more detailed information about training subjects. The latest edition shall be maintained at each station where de-icing is conducted from **www.sae.org**

10.4.3 Training Records

Records of personnel training and qualifications shall be maintained in accordance with DHLAGOM **8.5 - Training Records**.

UNCONTROLLED DOCUMENT (26 SEPTEMBER 2024 15:09:27)

UNCONTROLLED DOCUMENT

10.5 Fluid Handling and Storage

10.5.1 Fluid Handling

De-icing/anti-icing fluid is a chemical product with environmental impact. During fluid handling, avoid any unnecessary spillage and comply with local environmental and health laws and the fluid manufacturer's safety data sheet.

Different products shall not be mixed without additional qualification testing. Consult with the fluid manufacturers. Slippery conditions may exist on the ground or equipment following the deicing/anti-icing procedure. Caution should be exercised, particularly under low humidity or non-precipitation weather conditions.

10.5.2 Storage

Tanks shall be dedicated to the storage of the de-icing and/or anti-icing fluid to avoid contamination with other fluids. Storage tanks shall be constructed of materials compatible with the de-icing/anti-icing fluid, as specified by the fluid manufacturer. Care should be taken to avoid using dissimilar metals in contact with each other, as galvanic corrosion may form and degrade thickened fluids. Tanks shall be conspicuously labelled to avoid contamination. As a minimum, the following information must be identified:

- Type of fluid (SAE Types I, II, III, or IV).
- Fluid product name.
- Fluid concentration or mixture.

Examples:

- SAE Type I Fluid Manufacturer, Product Name, Concentrate Aircraft De-icing Fluid.
- SAE Type I Fluid Manufacturer, Product Name, Dilute Aircraft De-icing Fluid.
- SAE Type IV Fluid Manufacturer, Product Name, "undiluted," 75/25 or 50/50.

The condition of the tanks shall be examined annually for corrosion, contamination, and/or leaks. If corrosion or contamination is evident, tanks shall be repaired or replaced. Corrosion in tanks most often occurs in the vapor space of partially empty tanks by evaporation and subsequent condensation of water from the de-icing fluid. To reduce corrosion, keep tanks containing aircraft de-icing fluid full during summer or periods of low use.

10.5.3 Fluid Specification

Fluids acquired shall be manufactured in accordance with ISO and SAE foundation specification AMS1424 and AMS1428.

UNCONTROLLED DOCUMENT

UNCONTROLLED DOCUMENT

UNCONTROLLED DOCUMENT (26 SEPTEMBER 2024 15:09:27)

UNCONTROLLED DOCUMENT

10.5 Fluid Handling and Storage

10.5.4 Fluid Testing

De-icing fluids shall be tested as described below. If a fluid sample is found to be non-compliant, the finding must be rectified and appropriate action taken to ensure the affected batch of fluids is not used operationally.

1. **Fluid Delivery / Acceptance Check**

Fluid acceptance consists of delivery documentation checks, seal checks and fluid tests. Fluid acceptance check shall be performed for each delivery of aircraft de-icing and anti-icing fluids before the first use of the delivered fluid for filling a storage tank or de-icing vehicle tank. Additionally, the fluid manufacturer shall give assurances on the condition of each container and/or bulk loaded delivery tanker trailer (container/trailer status). This should be through cleaning certification documentation or previous load documentation.

a. Check of documentation on each delivery
    a. The delivery shall be accompanied by a certificate of analysis.
        i. For Type I, II, III, and IV fluids, the certificate shall include delivery specification limits and test results of the following:
            1. Appearance
            2. Refraction
            3. pH
        ii. For deliveries of Type II, III, and IV fluids, the certificate shall also include (delivery) viscosity specification limits and test results for laboratory viscosity testing.
    b. The documentation and paperwork accompanying the delivery shall be checked to verify the following:
        i. The delivered fluid name corresponds to the fluid ordered.
        ii. The delivered fluid brand name corresponds to product identification labels or tags for each delivery vessel.
        iii. The delivered fluid concentration corresponds to product identification labels or tags for each delivery vessel.
        iv. The lot or batch number on delivery documents correlate with other shipping documents provided.
        v. The test results noted on the certificate of analysis meet the applicable fluid manufacturer's specification limits.
b. Shipment seal checks
    a. Shipment seals shall be checked to ensure:
        i. The product has not been tampered with.
        ii. Identification numbers align with those noted on delivery documentation (where applicable).
    b. If seals contain identification numbers, the numbers should be noted on acceptance documentation.
    c. Fluid sample tests

Fluid sample shall be taken from the delivery vessel during bulk shipping prior to fluid transfer. A sample from each separate compartment is required, when applicable.
For packaged goods deliveries (i.e., sealed totes, pails, or drums), fluid testing can be postponed until the container is opened (unsealed) prior to be used or transferred.

After opened and sampled, if delivery includes multiple containers, it is considered acceptable if only one sample from each production lot or batch is taken.

UNCONTROLLED DOCUMENT (26 SEPTEMBER 2024 15:09:27)

UNCONTROLLED DOCUMENT

Before the first use of the delivered fluid for filling a storage tank or equipment tank, take a sample from the container/tank truck (each separate compartment if applicable) and perform the following checks:

- Visual examination for colour and foreign body contamination
- Concentration by a refractive index check
- pH (Optional; test if fluid degradation is expected)
- Viscosity check for thickened (Type II, III, and IV) fluids (Optional; test if fluid degradation is expected)
- All results shall be within the limits set by the applicable fluid manufacturer.

d. Nonconformities or Discrepancies

Users and service providers shall have a documented procedure in place on the appropriate action to be taken when irregularities or discrepancies are identified during the fluid delivery documentation checks and fluid sample tests.

Fluid manufacturers should have information contained within their documentation outlining specific procedures and/or contact information to assist and provide support to service providers in such occurrences.

2. **Fluid Pre-Season and Within-Season Checks**

Fluids that are applied to the aircraft shall meet the fluid manufacturer's specification. A program shall be in place that assures the safe use and performance parameters of fluids are always followed and met.
One way of complying with this requirement is to carry out a mid-season check.

3. **Type I Fluid**

Checks shall be performed:

- At the start of the de-icing season
- On any vehicle or storage tank when fluid contamination or degradation is suspected

Fluid samples shall be taken from all de-icing/anti-icing fluid spray nozzles of all de-icing/anti-icing spraying equipment in the most common concentrations used for de-icing/anti-icing, and from all storage tanks in use. For vehicles without a mixing system, the sample may be taken directly from the vehicle pre-mix tank after ensuring that the fluid is at a uniform mixture.

Perform the following checks on the fluid samples:

- Visual examination
- Refractive Index
- pH (*)

*Perform this check if it is suitable to detect degradation of the fluid used.

UNCONTROLLED DOCUMENT (26 SEPTEMBER 2024 15:09:27)

UNCONTROLLED DOCUMENT

4. **Type II, Type III, and Type IV Fluids**

Checks shall be performed:

- At the start of the de-icing season
- On any vehicle or storage tank when fluid contamination or degradation is suspected
- After equipment maintenance on the fluid pump and spray system that has the potential to affect the quality of the fluid (e.g., pumps, nozzles, etc.).

Fluid samples shall be taken from all de-icing/anti-icing fluid spray nozzles of all de-icing/anti-icing spraying equipment for all of the concentrations used for anti-icing and from all storage tanks in use. Perform the following checks:

- Visual examination
- Refractive Index
- pH (*)
- Laboratory viscosity

*Perform this check if it is suitable to detect degradation of the fluid used.

5. **Fluid Sample Check Requirements**

Results of the visual, refractive index, and pH checks shall be within the limits set by the applicable fluid manufacturer.

Results of the viscosity checks on samples from spray nozzles shall be no lower than the Lowest On-Wing Viscosity (LOWV) and no higher than the Highest On-Wing Viscosity (HOWV). Fluids with a viscosity less than the LOWV shall not be used with holdover time guidelines.

Results of the viscosity checks on samples from storage tanks shall be within the limits needed to ensure the viscosity of fluid when applied to aircraft will remain within the LOWV and the HOWV. Any expected degradation during fluid storage and handling and during the use of fluid application equipment must be taken into account.

NOTE: The LOWV for specific fluids are listed in Transport Canada and FAA holdover time guideline publications. The HOWV for specific fluids are provided by the applicable fluid manufacturer. The LOWV and HOWV are unique for each specific fluid and fluid concentration (i.e., 50%, 75%, and 100%).

6. **Daily Concentration Checks**

Fluids or fluid/water mixture samples shall be taken from the de-icing/anti-icing equipment nozzles or manufacturer's authorised sample ports on a daily basis when the equipment is in use. Perform a refraction test on the samples taken. The sample shall be protected against precipitation. Combustion heaters and trucks shall not be operated in confined or poorly ventilated areas to prevent asphyxiation.

NOTE 1: Equipment without a mixing system: samples may be taken from the mix tank instead of the nozzle. Ensure the fluid is at a uniform mix.

UNCONTROLLED DOCUMENT

UNCONTROLLED DOCUMENT

UNCONTROLLED DOCUMENT (26 SEPTEMBER 2024 15:09:27)

UNCONTROLLED DOCUMENT

NOTE 2: Equipment with proportional mixing systems: operational setting for the flow and pressure shall be used. Allow the selected fluid concentration to stabilize before taking a sample.

a. Type I Fluid from Nozzles

- Maximum permitted concentration shall not be exceeded.
- For use in a one-step method and in the second step of a two-step method, the concentration shall be such that the freezing point of the fluid is at least 10 °C (18 °F) below the OAT.
- For use in the first step of a two-step method, the concentration shall be such that the freezing point of the fluid is at the OAT or below.

b. Type I Fluid in Tanks

- The concentration shall be within the “in-service” limits published by the manufacturer for fluid at the applicable concentration.

c. Type II, III, and IV Fluids

- For fluids from nozzles or in tanks, the concentration shall be within the “in-service” limits published by the manufacturer for fluid at the applicable concentration.
- For Type II, III, and IV fluid/water mixtures (50/50 or 75/25), a tolerance range of 0 to +7% from the setting may apply, depending on the product.

7. **Fluid Sample Check Process**

The following fluid sample check processes are carried out:

VIT: Fluid Sample testing is conducted in accordance with AS6285E, section 4.3.6b.

EMA: Fluid Sample Testing is conducted in accordance with *Kilfrost Winter Best Practise Guide 2024/2025, Section 5: Correctly obtaining a representative sample of fluid.*

A copy of the Kilfrost 2024/2025 guidelines can be found below:

5.1 Ensuring the quality of Kilfrost ADF products

It is important to ensure that samples of ADF products are obtained in the correct manner and truly represent the quality of the bulk fluid or reflect the effects of the application method. Due to the possible influence of vehicle or equipment heating and delivery systems on fluid condition, it is necessary to assess the effect of how the fluid is used for typical aircraft treatment. Kilfrost recommends that operators take samples of all static and vehicle fluid storage tanks and from the nozzles of all de- and anti-icing vehicles for testing. This should be done at the start and middle of the deicing season to ensure product integrity. End of season samples need not be done but may be done when a deterioration of the product is suspected.

5.2 Sampling from different storage sources

The following steps are recommended for sampling from the appropriate storage sources:

5.2.1 Delivery truck

- Open the truck valve and drain a sufficient quantity of fluid to ensure the line has been well flushed
- Collect an additional amount of fluid as the representative sample
- Record the necessary details of the fluid and its source on a label before fixing this to the sample

UNCONTROLLED DOCUMENT (26 SEPTEMBER 2024 15:09:27)

UNCONTROLLED DOCUMENT

5.2.2 Intermediate bulk container (IBC)

- Break the seal and open the IBC lid at the top
- If IBC has been sitting unused for long time, will be necessary to stir contents before taking a sample
- Lower the sample thief into the centre of the IBC
- Open the sample thief and allow it to fill completely
- Remove the sample thief and fill a clean, dry sample container from it
- Clean the outside of the sample container, and label appropriately
- Replace and tighten the IBC screw lid

5.2.3 Storage tank

- Access the storage tank via a top opening
- If storage tank fluid has been static for long duration, will be necessary to recirculate contents prior to sampling
- Lower the sample thief into the centre of the fluid
- Open the sample thief and allow it to fill completely
- Remove the sample thief and fill a clean, dry sample container from the thief
- Clean the outside of the sample container and label appropriately
- Close the top opening of the tank

5.2.4 Nozzle sample

The preferred method of sampling from a fluid application nozzle is to spray the product from about 3 metres away onto a purpose-built stand. The stand should consist of a suitable plate (which simulates the aircraft surface) and a fluid collection system, usually a low point drain. In the absence of such a stand, the fluid may be sprayed into a suitable clean receptacle, such as a new rubbish bin. In detail:

- Select the spray pattern and flow rate as required
- Spray a sufficient quantity of fluid in order to purge the lines
- Spray the fluid onto the plate from a distance of 3 metres perpendicular to the plate
- Collect enough fluid in order to retain a suitable sample
- Record the necessary fluid details on a label before fixing this to the sample

UNCONTROLLED DOCUMENT

UNCONTROLLED DOCUMENT

UNCONTROLLED DOCUMENT (26 SEPTEMBER 2024 15:09:27)

UNCONTROLLED DOCUMENT

10.6 Holdover Time (Hot Charts)

The holdover time is the estimated amount of time an aircraft would be protected against frozen deposits, given the prevailing temperature and precipitation and the ratio of fluid / water mix.

With a one-step deicing/anti-icing process the holdover time begins at the start of the treatment and with a two-step deicing/anti-icing process at the start of the second step (anti-icing).

Anti-icing fluids are designed and used to protect treated surfaces from contamination for a specified range of times (the “holdover time”). Fluid Types II, III, and IV are usually applied unheated. The holdover time allows the aircraft to move to the runway from the location where it was treated, and then remain in the take-off queue for a limited time, without the danger of active frozen precipitation adhering to the treated surfaces prior to take-off. Integral to the design of these fluids is that they must not excessively interfere with the smooth flow of air over the surfaces at take-off. Anti-icing fluids therefore have two distinct performance criteria:

(1) to remain on the aircraft, preventing active precipitation from adhering, until the start of the take-off roll and

(2) to flow off of the surfaces during the take-off, which is referred to as the aerodynamic performance requirement. The SAE Standards AS6286, AS6285, and AS6332 have been written to give best-practice guidance for the use of deicing/anti-icing fluids to provide a clean aircraft for a safe take-off.

Holdover time will have effectively run out when frozen deposits start to form/accumulate on treated aircraft surfaces. Due to their properties, Type I heat transfer and the thin liquid wetting film, provides limited holdover time, especially in conditions of freezing precipitation. With this type of fluid, no additional holdover time would be provided by increasing the concentration of the fluid in the fluid/water mixture. Type II, III, and IV fluids contain a thickening agent, which enables the fluid to form a thicker liquid wetting film on external aircraft surfaces. This film provides a longer holdover time especially in conditions of freezing precipitation. With this type of fluid, additional holdover time will be provided by increasing the concentration of the fluid/water mixture, with a maximum holdover time available typically from undiluted fluid.

Holdover time guidelines give an indication as to the time frame of protection that could reasonably be expected under conditions of precipitation. However, due to the many variables that can influence holdover time, these times should not be considered as minima or maxima, as the actual time of protection may be extended or reduced, depending upon the particular conditions existing at the time, such as strong winds, jet blast, etc. Aircraft surfaces with steeper angles (e.g., vertical stabilizer, deployed flaps, etc.) might also have an effect on holdover times that needs to be considered.

Generic HOT charts are published each year and are available on, the FAA website **www.faa.gov**

Note:

Aircrew are only able to reference HOT charts as issued by their respective Airline Flight Operations. Should there be advantages by referring to manufacturer’s specific HOT charts, these should be notified to the Airline at the beginning of the season for inclusion within the aircraft issued documentation.

UNCONTROLLED DOCUMENT (26 SEPTEMBER 2024 15:09:27)

UNCONTROLLED DOCUMENT

10.6.1 Example HOT Chart

OAT		Type II Fluid Concentration Neat Fluid / Water (Vol% / Vol%)	Approximate Holdover Times Under Various Weather Conditions (hours : minutes)						
°C	°F		Active Frost	Freezing Fog	Snow / Snow Grains	Freezing Drizzle (1)	Light Freezing Rain (5)	Rain On Cold Soaked Wing (2)	Other (4)
-3 and above	27 and above	100/0	(6)	2:15 - 3:45	1:00 - 1:40	1:50 - 2:00	1:00 - 1:25	0:20 - 2:00	
		75/25	(6)	1:40 - 2:30	0:35 - 1:10	1:25 -2:00	0:50 - 1:10	0:15 - 2:00	
		50/50	(6)	0:35 - 1:05	0:05 - 0:15	0:20 - 0:30	0:10 - 0:15		
below -3 to -14	below 27 to 7	100/0	(6)	0:30 - 1:05	0:50 - 1:25	0:25 - 1:00 (3)	0:15 - 0:35 (3)		
		75/25	(6)	0:25 - 1:25	0:35 - 1:05	0:20 - 0:55 (3)	0:05 - 0:30 (3)	CAUTION: No holdover time guidelines exist	
below -14 to -25 or LOUT (7)	below 7 to -13 or LOUT (7)	100/0	(6)	0:30 - 0:55	0:15 - 0:30				

Caution

The above chart is an example only, not for operational usage.

UNCONTROLLED DOCUMENT (26 SEPTEMBER 2024 15:09:27)

UNCONTROLLED DOCUMENT

10.7 Quality Assurance Program

Airlines are obligated to conduct periodic, normally annually, audits of De-Icing/Anti-icing service providers.

Hubs and Gateways should familiarise themselves with this process and ensure a competent individual is appointed as a point of contact (POC) for referral to the Airline's Quality Assurance Departments.

To ensure the availability and use of adequate facilities and equipment for aircraft de-/anti-icing operations, an annual pre-season self-assessment shall be conducted at all stations that perform de-icing functions.

UNCONTROLLED DOCUMENT

UNCONTROLLED DOCUMENT

UNCONTROLLED DOCUMENT (26 SEPTEMBER 2024 15:09:27)

UNCONTROLLED DOCUMENT

10.8 Recommended DHL Practice

10.8.1 DHL 'Snowman' Concept

During the winter period when de-icing can be expected DHL stations should appoint a senior member of the ramp staff as de-icing responsible who should be referred to as Snowman.

The Snowman shall initially qualify and then annually re-qualify on the Network Airside on-line de-ice operations course which is available at:

- http://www.channelsolutions.org/dhl/ramp/index.htm

Once training has been completed satisfactorily, the responsible Regional Airside Department will review and if appropriate appoint the applicant as a Snowman. Authorisation to act as Snowman will remain valid for one winter season and then further re-qualification must be taken. A letter of authorisation and check list will be issued.

Snowman's responsibilities shall include:

- Checking weather conditions at start of operations and, if de-icing conditions are expected, ensures staff are briefed and equipment checked, filled and prepared for operation
- One hour prior to first scheduled departure, they should evaluate the existing conditions in conjunction with NCG and, where available a senior crew member
- If an aircraft have been on the ground for a period of time in icing conditions, i.e. after weekend stop, they should consider anti-icing or removal of heavy deposits prior to the loading sequence

Snowman should receive requests for de-icing from crews not less than 30 minutes prior departure. In event of known late arriving crew, e.g. due to late inbound aircraft, NCG should advise Snowman who will evaluate the condition of the aircraft and, where required, arrange for de-icing of the aircraft.

10.8.2 Early De-Snowing, De-Icing/Anti-Icing in Advance of a Request from the Operator

Due to the high number of different operators flying within the DHL Network, no blanket approval will be provided for early de-Snowing, de-icing/anti-icing activities; approval must be sought by the Aircraft Handling company directly with the Aircraft Operator on a case by case basis.

Approval for early de-snowing, de-icing/anti-icing on DHL aircraft must be requested from the responsible Airline Maintenance Operations Control Centre (MOC) and appropriate Flight Dispatch department to ensure the aircraft is correctly configured before commencing any De-snowing, De-ice procedure.

Early de-snowing can be carried out as per DHLAGOM procedures **10.16 - Brushes**, **10.17 - Forced Air** and **10.18 - No Spray Areas** as a pre-step process prior to the de-icing/anti-icing process in order to remove large amounts of contamination.

Any early de-icing/anti-icing process should be carried out as near to the departure time as operationally possible in order to utilize maximum holdover time. An early de-ice-anti-ice process is most effective during frost conditions.

a. Upon completion of de-icing/anti-icing, the code must be reported to the next operating crew; refer

11.10.4 - Post De-Icing/Anti-Icing Communication and **10.10.7 - Anti-Icing Codes**



Under no circumstances shall an aeroplane that has been anti-iced receive a further coating of Anti-icing fluid directly on top of the contaminated film. If hold over time has elapsed, a complete de-ice/anti-ice treatment shall be performed. Ensure that any remaining fluid from any previous treatment is flushed off. Anti-icing only is not permitted.

UNCONTROLLED DOCUMENT (26 SEPTEMBER 2024 15:09:27)

UNCONTROLLED DOCUMENT

10.9 Responsibilities

The responsibility to determine the need for de-icing/anti-icing before dispatch rests with the qualified person who performs the Contamination Check at the gate. This information must be given in writing or verbally to the Commander of the aircraft, who is after that responsible to proceed in order to get proper treatment. After treatment, the result must be checked by a trained and qualified person and the anti-icing code must be given to the Commander, after which the Commander is responsible for the airworthiness of the aircraft.

The Local DHL Hubs & Gateways entity shall be responsible for ensuring that the necessary infrastructure is in place at the Stations under their control, in order to maintain safe operations during ground icing conditions.

The Company responsible for the de-icing/anti-icing operation (further called “de-icing company”) shall maintain vehicles/equipment, fluids, training and procedures, in accordance with the latest edition of the relevant SAE documents. The de-icing company shall conduct internal audits at planned and random intervals to determine whether the QMS conforms to the planned arrangements of the latest SAE Standards and is effectively implemented.

Personnel carrying out the de-icing/anti-icing operation are responsible for ensuring that the task is performed in accordance with the requirements detailed in the latest edition of the Aircraft Maintenance Manual and SAE AS6285E

The person responsible for final release/dispatch of the aircraft is responsible for ensuring that the aircraft has been de-iced/anti-iced in accordance with the requirements detailed in the latest edition of the Aircraft Maintenance Manual and SAE AS6285E ensuring that relevant surfaces are free of frost, ice, slush and snow at the time of dispatch.

After receiving the Anti-icing Code, the Commander (pilot in command) is responsible for ensuring that the relevant surfaces remain free of frost, ice, slush and snow until takeoff.

UNCONTROLLED DOCUMENT

UNCONTROLLED DOCUMENT

UNCONTROLLED DOCUMENT (26 SEPTEMBER 2024 15:09:27)

UNCONTROLLED DOCUMENT

UNCONTROLLED DOCUMENT

UNCONTROLLED DOCUMENT

10.10 Communications

10.10.1 Communication Procedures

Persons communicating with the flight crew shall have a basic knowledge of the English language (operational level or equivalent according to the current version of the training document AS6286). For local flights involving local flight crew and groundcrew, local language may be used (refer to the current version of training document AS6286); otherwise, English is the preferred language of communication.

Communication between the flight crew and the groundcrew will usually be achieved using a combination of documentation, visual and/or verbal communication. For treatments carried out with flight crew onboard, the use of flight interphone (headset) or VHF radio will usually be required. Message boards (electronic/written) may also be used at designated de-icing facilities (DDF) and other de-icing locations to enhance communications. Use of hand signals is not recommended, except for the final “all clear” signal.

10.10.2 Communication Prior to Starting De-Icing/Anti-Icing Treatment

a. Before starting treatment, the flight crew shall be requested to confirm the treatment required (i.e., surfaces and components to be de-iced, anti-icing requirements, plus any special de-icing procedures).
b. Before treatment starts, the flight crew shall be requested to configure the aircraft for de-icing/anti-icing (surfaces, controls, and systems as per aircraft type requirements or recommended procedures). The de-icing personnel shall wait for confirmation that this has been completed before commencing the treatment.
c. For treatments conducted without the flight crew present, suitably qualified staff member shall be nominated by the aircraft operator

10.10.3 Communication During De-Icing/Anti-Icing Treatment

During engines-on de-icing/anti-icing operations, a constant two-way verbal communication shall be maintained between de-icing personnel and flight crew, and a visual positive hold control method shall be utilised during the de-icing/anti-icing procedure.

During engines-off de-icing/anti-icing operations, where constant two-way verbal communication is not possible, de-icing personnel shall inform the flight crew that communications will be disconnected and re-established on completion of the de-icing/anti-icing process. In the event of abnormal operations associated with the aircraft, flight crew shall follow air operator procedures for re-establishing communications (i.e., flashing of landing and/or taxi lights).

10.10.3.1 Interrupted Operations

A de-icing/anti-icing treatment should be continuous and as short as possible. If a treatment is interrupted (for example, a truck runs out of fluid or flight crew troubleshooting, etc.), parties involved in the operations shall be immediately informed stating:

a. The reason for interruption.
b. The actions to be taken (in consultation with other party flight crew/groundcrew).
c. The expected time of delay.
d. Statement that de-icing/anti-icing is incomplete and to standby.

10.10.4 Post De-Icing/Anti-Icing Communication

An aircraft shall not be dispatched for departure after treatment until the flight crew has been notified of the type of treatment performed and all the relevant information. The post-de-icing/anti-icing communication shall be provided by qualified staff upon completion of the treatment, indicating that the checked surfaces are free of frost, snow,

UNCONTROLLED DOCUMENT (26 SEPTEMBER 2024 15:09:27)

UNCONTROLLED DOCUMENT

slush, or ice; that de-icing/anti-icing is complete, that equipment is cleared from the area; and, in addition, providing the necessary information for the flight crew to estimate the appropriate holdover time for the prevailing weather conditions when anti-icing fluid has been used.

10.10.5 Post De-Icing/Anti-Icing Check

An aircraft shall not be dispatched after a de-icing/anti-icing operation until the aircraft has received the following visual check by a trained and qualified person. This check shall cover wings, horizontal stabilizer, vertical stabilizer and fuselage, plus all other parts of the aircraft on which a de-icing/anti-icing treatment was performed according to the requirements identified during the contamination check.

The check shall be performed from points offering sufficient visibility of all prescribed surfaces (e.g. from the de-icer itself or other equipment suitable for gaining access). Any contamination found, shall be removed by further de-icing/anti-icing treatment and the check repeated.

Before take-off the Commander must ensure that they have received confirmation that this Post De-icing/Anti-icing Check has been accomplished.

Note:

For specific aircraft types, additional requirements exists e.g. special clear ice checks, such as Tactile Checks* on wings. These special checks are not covered by the Post De-icing/Anti-icing Check. Aircraft operators shall make arrangements for suitably qualified personnel to meet these requirements.

*Tactile Check: Process by which a person sweeps the palm of the hand on the aircraft surfaces and uses the tips of their fingers for a more in-depth check for contaminants. Tactile checks, under certain circumstances, may be the only way of confirming the critical surfaces of an aircraft are not contaminated.

This can be performed by standing on the ground where possible on smaller aircraft.

For larger aircraft, position the De-icing platform slightly lower than the wing and extend an arm safely to feel for any contaminants on the aircraft skin by hand.

This method is used due to clear ice being difficult to detect, especially on white surfaces.

10.10.6 Pre-Takeoff Check

The Commander shall continually monitor the weather conditions after the performed de-icing/anti-icing treatment. Prior to takeoff they shall assess whether the applied holdover time is still appropriate and/or if untreated surfaces may have become contaminated. This Check is normally performed from inside the flight deck.

Pre-takeoff Contamination Check

This is a check of the critical surfaces for contamination. This check shall be performed when the condition of the critical surfaces of the aircraft cannot be effectively assessed by a pre-takeoff check or when the applied holdover time has been exceeded. This check is normally performed from outside the aircraft.

The alternate means of compliance to a pre-takeoff contamination check is a complete de-icing / anti-icing re-treatment of the aircraft.

UNCONTROLLED DOCUMENT (26 SEPTEMBER 2024 15:09:27)

UNCONTROLLED DOCUMENT

10.10.7 Anti-Icing Codes

The following information shall be recorded and be communicated to the Commander by referring to the anti-icing treatment. The elements below shall be provided:

a. The fluid type (i.e., Type I, II, III, or IV);
b. The fluid name (manufacturer and brand/trade name) of the Type II, III, or IV anti-icing fluid, if applicable;

NOTE: Communication of this element is not required for Type I fluid.

c. The concentration of fluid (dilution) within the undiluted fluid/water mixture, expressed as a percentage by volume for Type II, III, or IV (i.e., 100% ("undiluted") = 100% fluid, 75% = 75% fluid and 25% water, 50% = 50% fluid and 50% water);

NOTE: Communication of this element is not required for Type I fluid.

d. The local time (hours and minutes), either:
   - For a one-step de-icing/anti-icing operation: at the start of the final treatment; or
   - For a two-step de-icing/anti-icing operation: at the start of the second step (anti-icing);

e. The date in the following format: day, month, year (DDMMMYY (e.g., 28JAN15 = January 28, 2015));

NOTE: This element is required for record keeping and is optional for flight crew notification.

f. The statement, "Post-de-icing/anti-icing check completed."

NOTE: For specific aircraft types, additional requirements exist, e.g., tactile checks for clear ice on wing surfaces. Additional confirmation for these checks may be required.

EXAMPLE:

The last step of a de-icing/anti-icing procedure is the application of a mixture of 75% Type II fluid and 25% water, made by the Manufacturer as Brand X, commencing at 13:35 local time on 20 February 2016, is reported and recorded as follows:

"TYPE II / 75% / MANUFACTURER, BRAND X / 1335 / 20FEB16 / POST DEICING/ANTI-ICING CHECK COMPLETED"

NOTE: An alternative means of visual communication of the anti-icing code to the flight crew can be used (e.g., written on paper, EMBs, ACARS, EFBs, etc.)

UNCONTROLLED DOCUMENT

UNCONTROLLED DOCUMENT

UNCONTROLLED DOCUMENT (26 SEPTEMBER 2024 15:09:27)

UNCONTROLLED DOCUMENT

10.10.8 Post De-Icing/Anti-Icing Check and Transmission of the Anti-Icing Code to the Commander

It shall be clearly defined by the aircraft operator which company is responsible for conducting the post-deicing/anti-icing check and providing the flight crew with the post-deicing/anti-icing report including the anti-icing code, when applicable. If two different companies are involved in the deicing/anti-icing treatment and post-deicing/anti-icing check, it must be ensured that the post-deicing/anti-icing communication is not given before the post-deicing/anti-icing check has been completed.

The company conducting the deicing/anti-icing treatment shall be responsible for the treatment and transmit all information about the treatment to the company conducting the post-deicing/anti-icing check. The company conducting the post-deicing/anti-icing check shall have overall responsibility for the performance of the company conducting the deicing/anti-icing treatment.

10.10.8.1 Post De-Icing Report

De-icing treatments only. Anti-icing Holdover Times do not apply.

After the completion of a deicing only procedure, where no anti-icing holdover time is applicable, the company responsible for conducting the post-deicing check shall also provide the flight crew with the post-deicing communication. The following elements shall be recorded and be communicated to the flight crew as part of the post-deicing communication:

a. Deicing fluid type (i.e., Types I, II, III, or IV).
b. Statement that anti-icing holdover times do not apply.
c. The date in the following format: day, month, year (DDMMMYY format) (e.g., 28JAN15 = January 28, 2015).
d. NOTE: This element is required for record keeping and is optional for flight crew notification.
e. The statement “post-deicing check completed.”

10.10.9 All Clear Signal

The flight crew shall receive a confirmation from the ground crew that all de-icing/anti-icing operations are complete and that all personnel and equipment are clear before reconfiguring or moving the aircraft.

10.10.10 Off-Gate De-Icing/Anti-Icing Procedures

During off-gate de-icing/anti-icing a two-way communication between flight crew and de-icing/anti-icing operator/supervisor must be established prior to the de-icing/anti-icing treatment. This may be done either by intercom or by VHF radio. Alternate means of communication may be the use of ACARS, EFBs, and Message Boards. In the event of conflict, verbal communication shall take precedence.

During treatment, all necessary information must be transmitted to the flight crew, including the beginning of treatment, treatment of the sections requiring de-activation of aircraft systems, etc. (using standardised deicing/anti-icing phraseology). Communication contact with the flight crew may be concluded after transmission of the post-deicing/anti-icing communication and readiness for taxi-out has been announced.

During deicing/anti-icing operations with engines-on, both verbal and visual communications shall be utilised, and positive control maintained during the deicing/anti-icing operation in accordance with ARP5660.

UNCONTROLLED DOCUMENT (26 SEPTEMBER 2024 15:09:27)

UNCONTROLLED DOCUMENT

a. General instructions: The deicing/anti-icing operator and/or airport authority must ensure that all necessary information regarding operation of the off-gate/CDF/DDF site is published and available to flight crews. This information shall be included within the deicing/ni-icing operator's and/or airport authority's local procedures documentation and be made available to air operators and flight crews (e.g., it can be included as part of flight release documentation, etc.). This information should also be published in applicable state aeronautical navigation documents/publications. This information shall include, at a minimum:

    i. The location of and standard taxi routing to, within, and from the deicing/anti-icing site.
    ii. How to coordinate the deicing/anti-icing operation.
    iii. How to communicate before, during, and after the deicing/anti-icing operation.
    iv. How taxi-and-stop guidance is provided to the flight crew (e.g., VHF, MBs, etc.).
    v. Any unique requirements or procedural differences affecting the flight crew and/or flight crew/groundcrew interface.

b. Responsibilities: The responsibility to conduct a contamination check before dispatch rests with trained and qualified personnel. If the contamination check was performed by a person different than the flight crew, the results of the contamination check must be provided to the flight crew via verbal or visual (written or electronic) means. Subsequently, the flight crew is responsible for acquiring the proper treatment. After treatment, the treated surfaces and components must be checked by a trained and qualified staff and the post-deicing/anti-icing report must be given to the flight crew. Subsequently, the flight crew is responsible for the airworthiness of the aircraft.
c. Emergency procedures: Whether conducting deicing/anti-icing operations at a remote location or at a centralized deicing/anti-icing facility, local procedures shall be established to ensure that both aircraft and ground emergencies are handled safely, expeditiously, and are coordinated with the local emergency plan.

UNCONTROLLED DOCUMENT

UNCONTROLLED DOCUMENT

UNCONTROLLED DOCUMENT (26 SEPTEMBER 2024 15:09:27)

UNCONTROLLED DOCUMENT

10.11 Fluid Application

10.11.1 De-Icing

These procedures specify the methods for deicing and anti-icing of aircraft on the ground to provide safe take-off. When aircraft surfaces are contaminated by frozen moisture, they shall be deiced prior to dispatch with fluids, mechanical methods, alternative technologies, or combinations thereof. When freezing precipitation exists and the precipitation is adhering to the surfaces at the time of dispatch, aircraft surfaces shall be deiced/anti-iced with fluids. If both deicing and anti-icing are required, the procedure may be performed in one or two steps. The selection of a one- or two-step procedure depends upon weather conditions, available equipment, available methods (generally the use of deicing and anti-icing fluids), and the holdover time needed.

10.11.1.1 Requirements

Ice, snow, slush and frost shall be removed from aircraft surfaces prior to dispatch or prior to anti-icing, in order to reduce the quantity of glycol-based de-icing fluid that is needed. This pre-deicing procedure may be performed with various means (e.g., infrared technology, brooms, forced air, fluid injected into forced air, heat, heated water, heated fluids with negative buffer). If the pre-deicing procedure is used, make sure that the subsequent deicing procedure removes all frozen contamination including the contamination that may have formed on surfaces and/or in cavities due to the pre-deicing procedure.

When spraying de-icing fluid in windy conditions suitable eye protection should be worn.

10.11.1.2 General

For maximum effect, fluids shall be applied close to the surface to minimize heat loss. Fluid temperature and pressure should not exceed aircraft maintenance manual requirements. The heat in the fluid effectively melts any frost, as well as light deposits of snow, slush, and ice. Heavier accumulations require the heat to break the bond between the frozen deposits and the structure; the hydraulic force of the fluid spray is then used to flush off the contamination. The deicing fluid will prevent refreezing for a period of time, depending on aircraft skin and OAT, the fluid used, the mixture strength, and the weather.

10.11.1.3 Removal of Frost and Light Ice

10.11.1.3.1 General Procedure

A general procedure consisting of a nozzle setting that gives a solid cone (fan) spray should be used. This ensures the largest droplet pattern available, thus retaining the maximum heat in the fluid. Providing the hot fluid is applied close to the aircraft skin, a minimal amount of fluid will be required to melt the deposit.

10.11.1.3.2 Removal of Local Area Contamination

When no precipitation is falling or expected, and when there is no active frost, a “local area” deicing may be carried out under the below mentioned or similar conditions. In some cases, a full or complete deicing is not necessary. When the presence of frost and/or ice is limited to localized areas on the surfaces of the aircraft and no holdover time is applicable, only the contaminated areas will require treatment.

This type of contamination will generally be found on the wing and/or stabilizer leading edges, or in patches on the wing and/or stabilizer upper surfaces. Spray the affected area(s) with a heated fluid/water mixture suitable for a one-step procedure. Both sides of the wing and/or stabilizer upper surfaces shall receive the same type of fluid; the same area in the same location on each wing/stabilizer shall be sprayed, including when conditions would not indicate the need for treatment of both wings/stabilizers.

UNCONTROLLED DOCUMENT (26 SEPTEMBER 2024 15:09:27)

UNCONTROLLED DOCUMENT

It is the responsibility of the deicing service provider to ensure that the treatment is performed symmetrically and that upon completion, all frozen deposits have been removed. After this check has confirmed that the areas are clean, the following statement shall be given to the flight crew: “Local area deicing only. Holdover times do not apply.”

10.11.1.4 Removal of Snow

A nozzle setting sufficient to flush off deposits and minimise foam production is recommended. Foam could be confused as snow.

Note:

The procedure adopted will depend on the equipment available and the depth and type of snow; i.e. light and dry or wet and heavy. In general, the heavier the deposits, the heavier the fluid flow that will be required to remove it effectively and efficiently from the aircraft surfaces. For light deposits of both wet and dry snow, similar procedures as for frost removal may be adopted. Wet snow is more difficult to remove than dry snow and unless deposits are relatively light, selection of high fluid flow will be found to be more effective. Under certain conditions it will be possible to use the heat, combined with the hydraulic force of the fluid spray to melt and subsequently flush off frozen deposits. Heavy accumulation of snow will always be difficult to remove from aircraft surfaces and vast quantities of fluid will invariably be consumed in the attempt. Under these conditions, serious consideration should be given to removing the worst of the snow manually before attempting a normal de-icing procedure.

10.11.2 Removal of Ice

Heated fluid shall be used to break the ice bond. The method makes use of the high thermal conductivity of the metal skin.

A stream of hot fluid is directed at close range onto one spot at an angle of less than 90º, until the aircraft skin is just exposed. The aircraft skin will then transmit the heat laterally in all directions raising the temperature above the freezing point thereby breaking the adhesion of the frozen mass to the aircraft surface. By repeating this procedure a number of times, the adhesion of a large area of frozen snow or glazed ice can be broken. The deposits can then be flushed off with either a low or high flow, depending on the amount of the deposit.

10.11.3 General De-Icing Fluid Application Strategy

For effective removal of snow and ice, the following techniques shall be adopted. Certain aircraft can require unique procedures to accommodate design differences, see aircraft manufacturer's instructions. Ice, snow or frost dilutes the fluid. Apply enough hot de-icing fluid ensure that re-freezing does not occur and all contaminated fluid is driven off.

10.11.3.1 Wings, Horizontal Stabiliser, and Elevators

The direction of the spray shall be from the leading edge to the trailing edge in the vicinity of any control surfaces (i.e., the rudder). Caution must be used to ensure fluid is not sprayed directly into any vertical tail or control surface openings.

Note:

On aircraft with no leading-edge devices (i.e., hard wing and/or propeller driven), de-icing/anti-icing fluid may be sprayed from highest point of the wing surface camber to the lowest, flowing forward over the leading edge of the wing ensuring sufficient rollover, and over the trailing edge. Caution must be used to ensure fluid is not sprayed directly into any wing openings.

UNCONTROLLED DOCUMENT (26 SEPTEMBER 2024 15:09:28)

UNCONTROLLED DOCUMENT

CAUTION

Wing surface temperatures can be considerably below ambient temperature due to contact with cold fuel and/or proximity to large masses of cold-soaked metal. Use a fluid/water mixture with a higher concentration of glycol than is usually required by the OAT to prevent refreezing.

10.11.3.2 Underwing De-Icing Procedures

Treatments must be symmetrical and may include flaps and lower surfaces. Spray the affected areas with a heated fluid/water mixture suitable for a one-step procedure as required (see caution below), and then spray the same areas under the other wing. Both wings must be treated identically (same areas, same amount and type of fluid, same mixture strength), even if the frozen contamination is only present under one wing. Holdover times do not apply to underwing treatments.

It is the responsibility of the deicing service provider to ensure that the treatment is performed symmetrically, and that on completion, all frozen deposits (with the possible exception of frost, which may be allowed) have been removed. When it is confirmed that the treated areas are clean, the following statement shall be given to the flight crew: “Underwing deicing only, holdover times do not apply.”

CAUTION

Under wing frost and ice are usually caused by very cold fuel in the wing tanks. Use a fluid/water mixture with a higher concentration of glycol than is usually required by the OAT to prevent re-freezing.

10.11.3.3 Verticle Surfaces

Start at the top and work down to the base of any vertical surface, spraying from forward to aft in the vicinity of control surfaces.

10.11.3.4 Fuselage

Spray the fluid along the top centreline and then towards the outboard of the fuselage. Ensure that it is clear of ice, snow, and slush in accordance with the aircraft manufacturer’s manuals. Hoarfrost may be allowed in accordance with the aircraft manufacturer’s manuals.

10.11.3.5 Nose/Radome Area and Flight Deck Windows

Type I / water fluid mixture or manual methods of removal (such as squeegees or brushes) are recommended. When thickened fluids are used, avoid spraying near flight deck windows, as fluid residues can cause a severe loss of visibility during flight. Any thickened fluid remaining on nose areas where it could blow back onto the windscreens should be removed prior to departure, using a diluted Type I fluid, squeegees or equivalent. If flight deck windows are contaminated with thickened fluids use water or an approved windshield cleaner (use of a low freezing point windscreen washing fluid is recommended when OAT is at or below 0 °C (32 °F)).

CAUTION

Prior to cleaning of Flight Deck Windows ensure that the window heating system is switched off.

UNCONTROLLED DOCUMENT (26 SEPTEMBER 2024 15:09:28)

UNCONTROLLED DOCUMENT

UNCONTROLLED DOCUMENT

UNCONTROLLED DOCUMENT

10.11.3.6 Landing Gears and Wheel Bays

Do not spray deicing fluid directly onto wheels and brakes. Remove all ice and snow from the landing gear; paying particular attention to uplocks, downlocks, sensors, door mechanisms, gravel deflectors and steering systems.

Note:

It may be possible to mechanically remove accumulations such as blown snow; however, where deposits have bonded to surfaces, they can be removed by the application of hot air.

10.11.3.7 Engines

Deposits of snow should be mechanically removed from engines prior to departure. Any frozen deposits that may have bonded to either the lower surface of the intake or the fan blades including the rear side, or propellers, may be removed by hot air or other means recommended by the engine manufacturer. If use of deicing fluid is permitted, do not spray directly into the engine core.

WARNING

Removal of snow by forced air is not allowed – this procedure is valid for removal of ice only.

1. **Turbofan Engines**

To prevent damage to the turbine, de-icing of fan blades may be required. This is usually accomplished by directing a source of hot air to the back of the engine, and keeping the hot air blowing until all ice has melted. Care must be taken to remove all water that has accumulated in the engine nacelle, to prevent it from freezing again.

Only flight crew and ground engineers are allowed to ascertain whether engine de-icing is required. The following procedure shall be followed:

- If fan blade de-icing/heating is required it is to be specifically stated to the appropriate DHL representative/office, normally when requesting aircraft de-icing
- If fan blade heating/de-icing is required it is to be coordinated with the appropriate local DHL representative
- Do not use scrapers of any kind to remove ice as it will damage the fan blades

2. **Propeller Engines**

Precautions

No aircraft propellers shall be de-iced when the aircraft engines are “LIVE” (Hotel mode). Protective gloves (waterproof and heat resistant) must be worn during this operation, the gloves should be of a type that will not allow any fluid to run off and enter the cuffs of the operatives’ protective clothing. Agreement and co-ordination with the flight deck is critical to this operation. In addition suitable and sufficient face and eye protection should be worn.

De-icing with Engine Blanks fitted

Where engine intake covers / blanks have been fitted, propeller blades can be sprayed using a fine cone spray 75/25 mix heated.

De-icing without Engine Blanks fitted

Where engine intake covers / blanks have not been fitted the propeller blades must be deiced using a lint free cloth soaked in hot fluid from a heat resistant bucket. Or alternatively a light spray directed at the top of the blade and allowed to run down the length of the blade.

This **must** be done in such a way as to minimise any overspray into the engine intakes. The cloth shall be run the full length of the blade and a tactile check carried out to confirm all contamination has been removed, once the first

UNCONTROLLED DOCUMENT (26 SEPTEMBER 2024 15:09:28)

UNCONTROLLED DOCUMENT

propeller has been successfully de-iced then the blade is turned “**clockwise”** or “**anti clockwise”** as advised by the flight deck for their particular engine type until the next blade is in a suitable position to be cleaned. In all cases the operator shall stand clear and directly in front of the blades when carrying out this function.

10.11.3.8 Pitot Tubes, Static Ports and all other Data Sensing Devices

Pitot tubes, static ports, and other air data sensing devices shall be free of frost, snow, slush, ice, and fluid.

NOTE: Ice ridges can form on the nose of the fuselage while on the ground. These ridges will disrupt air flow into the pitot tubes and which can result in false measurements. All contamination shall be removed from this area.

10.11.4 Anti-Icing

Frost, snow, slush, or ice will, for a period of time, be prevented from adhering to or accumulating on aircraft surfaces by the application of anti-icing fluids. The following procedures shall be adopted when using anti-icing fluids.

10.11.4.1 Required Usage

Anti-icing fluid shall be applied to the aircraft surfaces when freezing rain, snow or other freezing precipitation may adhere to the aircraft at the time of aircraft dispatch.

10.11.4.2 Operational Usage

Anti-icing fluid may be applied to clean aircraft surfaces at the time of arrival (preferably before unloading begins) on short turnarounds during freezing precipitation, and on overnight aircraft. This will minimize ice accumulation prior to departure and often makes subsequent de-icing easier.

CAUTION

This practice has the potential to build up dried residues. An appropriate inspection and cleaning program shall be established.

In anticipation of weather conditions that require de-icing, anti-icing fluid may be applied to clean aircraft surfaces prior to the aircraft being exposed to the freezing precipitation. This will minimize the possibility of snow and ice bonding or reduce the accumulation of frozen precipitation on aircraft surfaces and facilitate subsequent de-icing.

CAUTION

This practice has the potential to build up dried residues. An appropriate inspection and cleaning program shall be established.

Prior to flight the aircraft must be de-iced, unless the integrity of the fluid can be ensured.

10.11.4.3 General

For effective anti-icing, an even layer of sufficient thickness of fluid is required over the prescribed aircraft surfaces, which are clean (free of frozen deposits). For longer anti-icing protection, undiluted Type II, Type III, or Type IV fluid should be used. The high fluid pressures and flow rates normally associated with de-icing are not required for this operation and, where possible, pump speeds should be reduced accordingly. The nozzle of the spray gun should be adjusted to provide a medium spray.

Note:

Type I fluids provide limited holdover effectiveness when used for anti-icing purposes. Little benefit is gained from the minimal holdover time generated.

UNCONTROLLED DOCUMENT (26 SEPTEMBER 2024 15:09:28)

UNCONTROLLED DOCUMENT

UNCONTROLLED DOCUMENT

UNCONTROLLED DOCUMENT

10.11.4.4 Anti-Icing Fluid Application Strategy

The spraying procedure should be continuous and as short as possible. Anti-icing should be carried out as near to the departure time as possible in order to utilise available holdover time. The anti-icing fluid shall be distributed uniformly and with sufficient thickness over all surfaces to which it is applied. In order to control the uniformity, all aircraft surfaces shall be visually checked during application of the fluid. Spray from the leading edge to the trailing edge on wings, horizontal, and vertical stabilizers.

To use Type I holdover times guidelines in all conditions, including active frost, an additional minimum of 1 L/m2 (~2 gallons/100 ft2) of heated Type I fluid/water mixture must be applied to the surfaces after all frozen contamination is removed. This application is necessary to heat the surfaces, as heat contributes significantly to the Type I fluid holdover times. The Type I/water mixture used for anti-icing must be selected so that the freezing point of the mixture is at least 10 °C below the OAT and heated so the nozzle temperature is at least 60 °C (140 °F).

For Type II, III, or IV fluids (non-Newtonian fluids), a sufficient amount is indicated by fluid just beginning to run off of the leading and trailing edges of horizontal surfaces. Apply sufficient fluid to achieve an even, uniform layer, typically achieved by using 1 to 3 L/m2 (~2 to 6 gallons/100 ft2), depending on the type of non-Newtonian anti-icing fluid used.

For fluids which form a more static layer, the minimum quantity required will typically be 1 litre/square metre applied in an even layer across the surface. For further guidance on the amount of fluid, refer to SAE AS6286D training documentation and/or the fluid manufacturer's documentation. Spray from the leading edge to the trailing edge on wings, horizontal and vertical stabilisers.

The following surfaces shall be treated:

a. Wing upper surfaces including leading edges and upper control surfaces;
b. Wing tip devices;
c. Both sides of vertical stabiliser and rudder to receive anti-ice protection when freezing precipitation conditions exist;
d. Horizontal stabiliser upper surfaces including leading edges and elevator upper surfaces;
e. When necessary, fuselage upper surfaces depending upon the amount and type of precipitation (especially important on centre-line engine aircraft).

CAUTION

Anti-icing fluids may not flow evenly over wing leading edges, horizontal and vertical stabilisers. These surfaces should be checked to ensure that they are properly coated with fluid.

It is the responsibility of the Deicing Service Provider to ensure that the surfaces mentioned above are free of frost, snow, slush, or ice prior to the start of the anti-icing treatment and that on completion of the treatment these surfaces are fully covered with an adequate layer of anti-icing fluid.

Note: SAE Type II, III, and IV fluids used for anti-icing purposes are normally applied unheated on clean aircraft surfaces, but they may be applied heated and diluted for a one-step procedure. Refer to the fluid manufacturer's recommendation.

UNCONTROLLED DOCUMENT (26 SEPTEMBER 2024 15:09:28)

UNCONTROLLED DOCUMENT

10.12 Precautions

Engines shall remain running at idle or can be shut down during deicing/anti-icing operations. Air conditioning and/or auxiliary power unit (APU) bleed air shall be selected OFF, or as recommended by the airframe and engine manufacturer. Avoid spraying deicing/anti-icing fluid directly into the engine inlet core. However, **propeller aircraft must not have engines running under any circumstances.**

UNCONTROLLED DOCUMENT

UNCONTROLLED DOCUMENT

UNCONTROLLED DOCUMENT (26 SEPTEMBER 2024 15:09:28)

UNCONTROLLED DOCUMENT

10.13 Cold-Soak Effect

Gateways should be familiarise themselves with the ‘Cold-Soak Effect’ certain operational flights may be prone to this effect and require de-icing equipment to be made available in ambient temperatures up to +15 ºC (59 ºF) . Ice can form on aircraft surfaces even when the outside air temperature (OAT) is well above 0 °C (32 °F). An aircraft equipped with wing fuel tanks may have fuel that is at a sufficiently low temperature such that it lowers the wing skin temperature to below the freezing point of water. The low temperature of the fuel may come from flying at a high altitude, where cold temperature prevails, for a period of time, or from fueling with cold fuel. This phenomenon is known as cold soaking. While on the ground, the cold-soaked aircraft will cause ice to form when water as rain or as vapor (humidity), comes in contact with cold-soaked surfaces.

UNCONTROLLED DOCUMENT

UNCONTROLLED DOCUMENT

UNCONTROLLED DOCUMENT (26 SEPTEMBER 2024 15:09:28)

UNCONTROLLED DOCUMENT

10.14 Cold Dry Snow or Ice Crystals

Cold dry snow or ice crystals, in very cold conditions (generally below -10 °C [14 °F]), may not adhere to a cold dry aircraft nor its critical surfaces. Under these conditions, it may swirl as it blows across the surfaces, making it evident it is not adhering. Therefore, the critical surfaces remain free of adhering contaminants. However, if frozen contamination has accumulated on critical surfaces, it must be adequately removed. It cannot be assumed that these accumulations will blow off during takeoff.
During cold dry conditions, the air operators will need to take into consideration the following elements:

1. Refueling with fuel warmer than the wing skin temperature may create a condition whereby previously non-adhering precipitation may adhere to the wing surfaces.

2. The use of heated deicing fluids may increase the risk of cold dry snow or ice crystals to adhere to critical surfaces post application. Under such operational conditions, an anti-icing treatment might need to be considered.

CAUTION: A close monitoring of deicing/anti-icing fluid's LOUT is required to ensure a safe operation.

3. Monitor the location of heat-releasing equipment such as ground power units or bridges that may create conditions for non-adhering precipitation to start adhering to aircraft surfaces.

4. The location where the aircraft is parked might increase the risk for non-adhering precipitation to start adhering

(e.g., one wing in the sun, a building obstructing the wind, etc.).

5. Operations in close proximity to other aircraft may cause snow, ice particles, or moisture to be blown onto critical aircraft components; or can cause dry snow/ice crystals to melt and refreeze on aircraft critical surfaces. If it cannot be adequately demonstrated that cold dry snow or ice crystals are not adhering or accumulating, then it must be removed before takeoff.

CAUTION: Aircraft with rear mounted engines are more susceptible to ingest frozen accumulation that might cause damage or engine failure.

UNCONTROLLED DOCUMENT

UNCONTROLLED DOCUMENT

UNCONTROLLED DOCUMENT (26 SEPTEMBER 2024 15:09:28)

UNCONTROLLED DOCUMENT

10.15 General Safety

Always use brooms or forced air blowers from the bucket of a de-icing vehicle, 'Cherry Picker' or mobile maintenance platform. When working at heights ensure that a safety harness attached to the bucket or working platform is used. The safety harness shall comply with local Health & Safety requirements for working at heights.

Any equipment used shall be attached by a lanyard to either the operator or the bucket/working platform.

A Safety bulletin will be issued prior to each winter period in order to ensure all Gateways are prepared for winter operations.

UNCONTROLLED DOCUMENT

UNCONTROLLED DOCUMENT

UNCONTROLLED DOCUMENT (26 SEPTEMBER 2024 15:09:28)

UNCONTROLLED DOCUMENT

10.16 Brushes

1. Equipment

Although a common household brush could be used, a larger, sturdier commercial variety is usually chosen. Always use natural bristles, not plastic, and ensure that the bristles are sturdy enough to be effective, yet not so stiff as to do damage to the skin of the aircraft. The brush that is to be used to sweep the snow should not be used to sweep floors and other surfaces.

2. Procedures

- Brushes are very useful in cleaning windows and other sensitive areas (e.g. a radome) where the application of hot liquid is best avoided or prohibited
- Extra attention should be paid to safety, especially when combined with the tendency to stretch the reach with a brush. Slippery surfaces can make climbing dangerous
- Personnel shall never attempt to sweep snow from wing and tail surfaces while standing on these surfaces. This is an extremely unsafe practice with a very high risk of a slip and fall accident. As well, many surfaces are not stressed to support the weight of a person
- Using the brush to remove contamination does not mean that the surface is clean and safe for flight. Every time a brush is used to remove contamination, a tactile inspection shall be done and the aircraft de-iced in the normal way if any contaminant is found

The following procedures shall be observed when using a brush to clean snow or frozen contaminants from the critical surfaces of an aircraft:

- Ensure the flight crew and/or maintenance personnel conducting aircraft checks are aware that contamination removal is being conducted and advise them when the removal procedures are complete
- Ensure that control surfaces are in the “neutral” position (all leading edge devices, flaps and spoilers are retracted, unless they are deployed for an operational reason)
- Ensure the horizontal stabilizer is in the full nose down position
- Sweep from leading edge of the wing to the trailing edge. Generally try not to push contamination from the trailing edge towards the leading edge, otherwise this may push frozen contamination into cracks and crevasses and cause flight control difficulties later
- Generally, sweep contamination from wing tip to wing root
- Sweep contamination away from flight controls, hinges points and bay areas
- If all of the contamination cannot be removed when working from the leading edge, because the brush is not long enough, then remove the remaining contamination by dragging it off the trailing edge. Ensure that the handle of the brush does not come in contact with any other surface of the wing because damage may result

UNCONTROLLED DOCUMENT

UNCONTROLLED DOCUMENT

UNCONTROLLED DOCUMENT (26 SEPTEMBER 2024 15:09:28)

UNCONTROLLED DOCUMENT

10.17 Forced Air

1. Equipment

Forced air equipment, such as high volume leaf blowers, must provide sufficient pressure to be able to remove dry snow at a distance of 1 – 2 meters (3 – 6 feet) from the aircraft surface. This, in itself, will require that the equipment is of the 'back pack' type with an independent power source such as a small petrol engine.

Forced air can be used as part of a two-step process i.e. snow removal followed by fluid de-icing.

2. Procedures

The following procedures shall be observed when using forced air to remove contamination:

- Ensure that the flight crew and/or maintenance personnel conducting aircraft checks are aware that contamination removal is being conducted and when the removal procedures are complete;
- Ensure that ground-handling staff is not loading/unloading when forced air is being used;
- Ensure that all cabin doors and cockpit windows are closed;
- Ensure that the forced air is approximately the same temperature as the OAT. If air is hotter than OAT, this may melt the contamination causing it to re-freeze on the aircraft surface;
- Always check with the aircraft manufacturer prior to using forced air on structures made of honeycomb;
- Blow contamination from leading edge to trailing edge of the wings and stabilisers. Generally, don't use forced air to blow contamination from trailing edge to leading edge because this could force contaminants into the balance bays and into other cavities;
- Avoid using the forced air near windscreen wipers, because damage may result;
- Avoid using the forced air in areas that are made of rubber, plastic or other soft material, as damage may result;
- The tip of the forced air nozzle should be no closer than 1 meter (3 feet) from the contaminated surface.

Care must be taken to prevent damage to vortex generators, Angle of Attack sensors, pitot heads, winglets etc. when manual methods of snow clearing are employed.

UNCONTROLLED DOCUMENT

UNCONTROLLED DOCUMENT

UNCONTROLLED DOCUMENT (26 SEPTEMBER 2024 15:09:28)

UNCONTROLLED DOCUMENT

10.18 No Spray Areas

Observe and respect the following area where spraying or distribution of De-Icing fluid is not allowed:

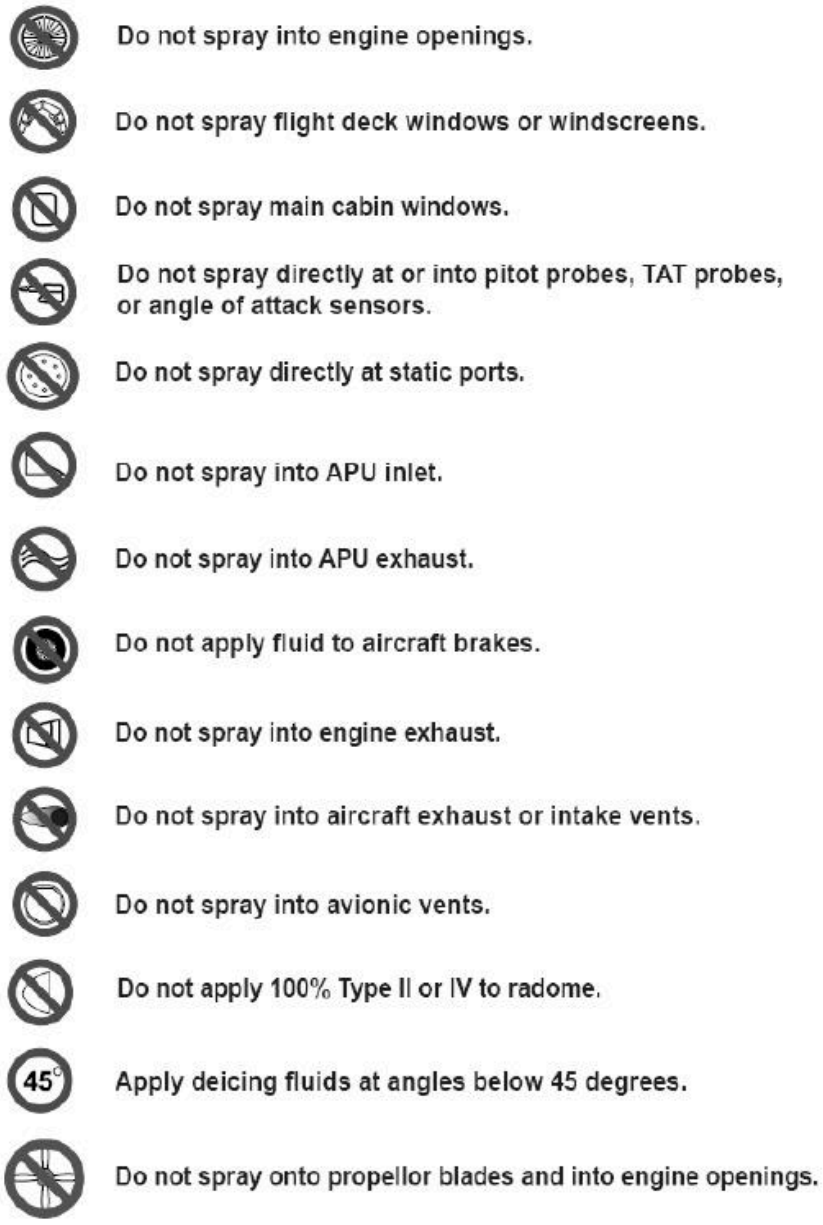

UNCONTROLLED DOCUMENT

UNCONTROLLED DOCUMENT

UNCONTROLLED DOCUMENT (26 SEPTEMBER 2024 15:09:28)

UNCONTROLLED DOCUMENT

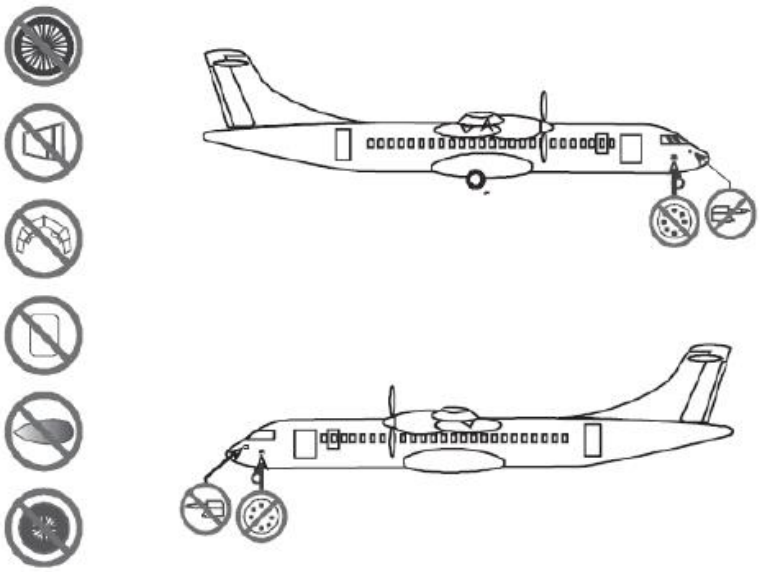

ATR-42

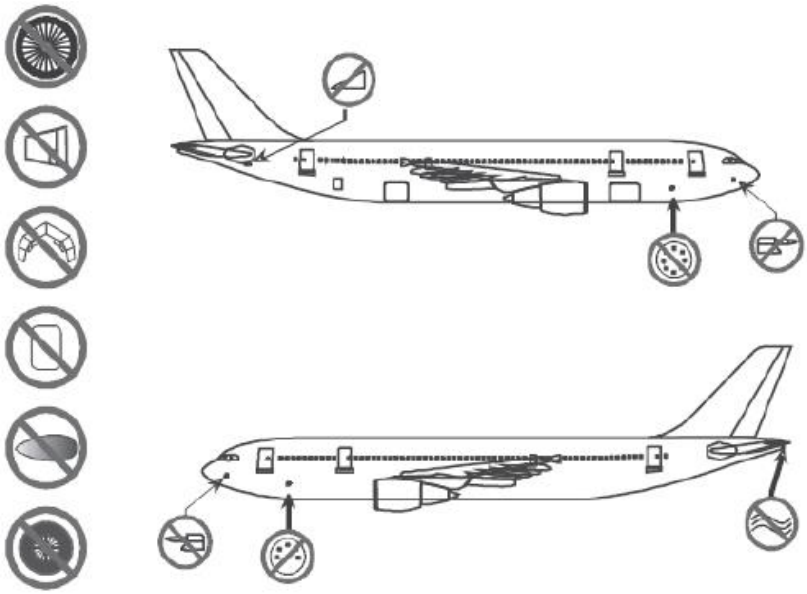

A300

UNCONTROLLED DOCUMENT

UNCONTROLLED DOCUMENT

UNCONTROLLED DOCUMENT (26 SEPTEMBER 2024 15:09:28)

UNCONTROLLED DOCUMENT

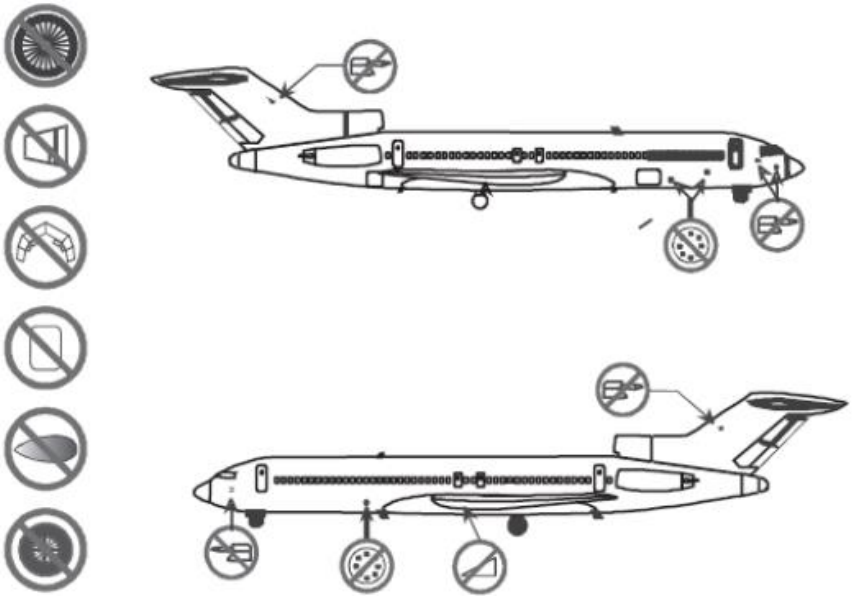

B727

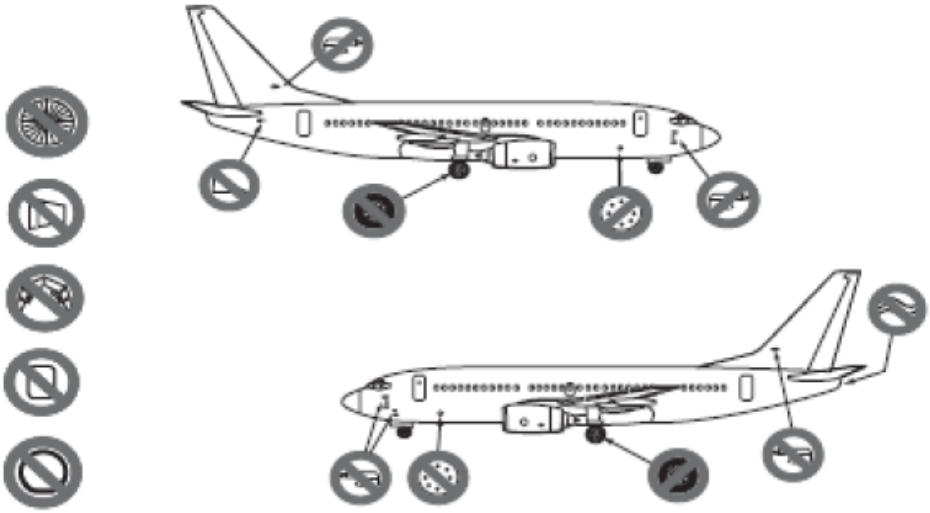

B737

UNCONTROLLED DOCUMENT (26 SEPTEMBER 2024 15:09:28)

UNCONTROLLED DOCUMENT

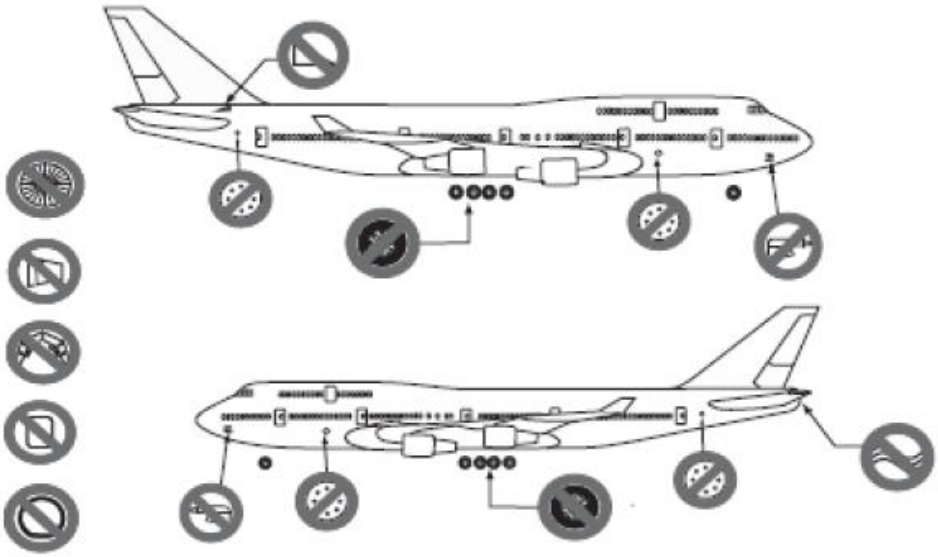

B747

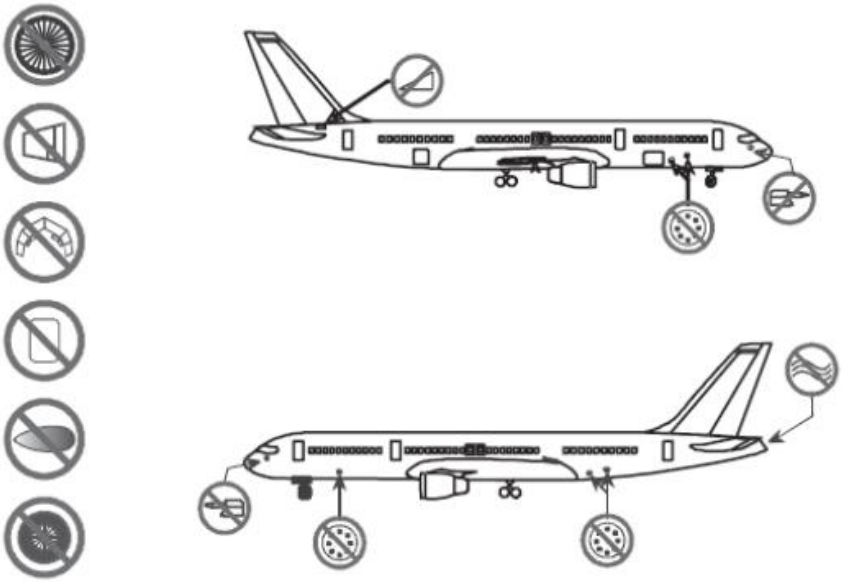

B757

UNCONTROLLED DOCUMENT

UNCONTROLLED DOCUMENT

UNCONTROLLED DOCUMENT (26 SEPTEMBER 2024 15:09:28)

UNCONTROLLED DOCUMENT

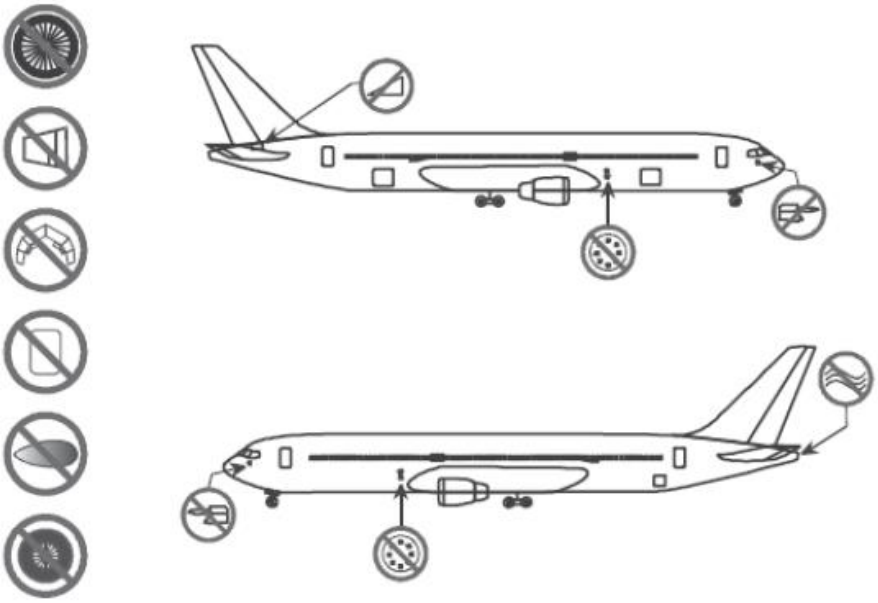

B767

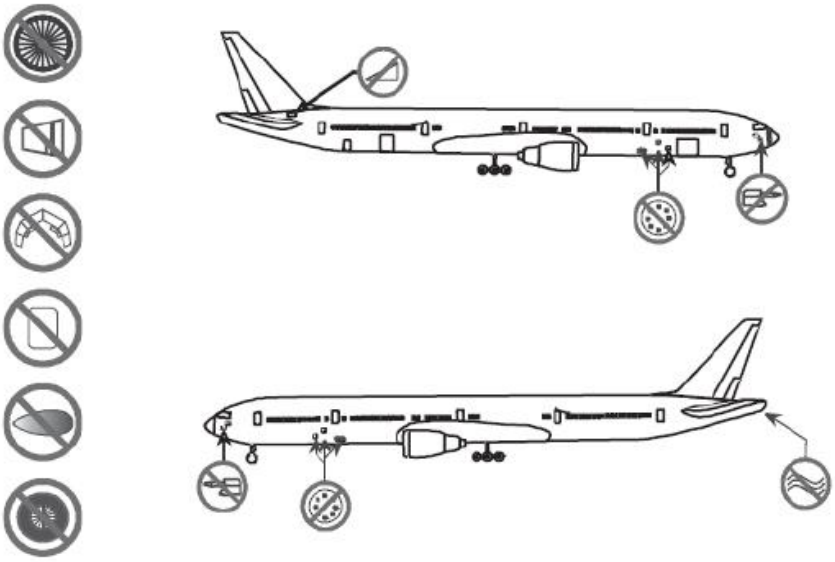

B777

UNCONTROLLED DOCUMENT

UNCONTROLLED DOCUMENT

UNCONTROLLED DOCUMENT (26 SEPTEMBER 2024 15:09:28)

UNCONTROLLED DOCUMENT

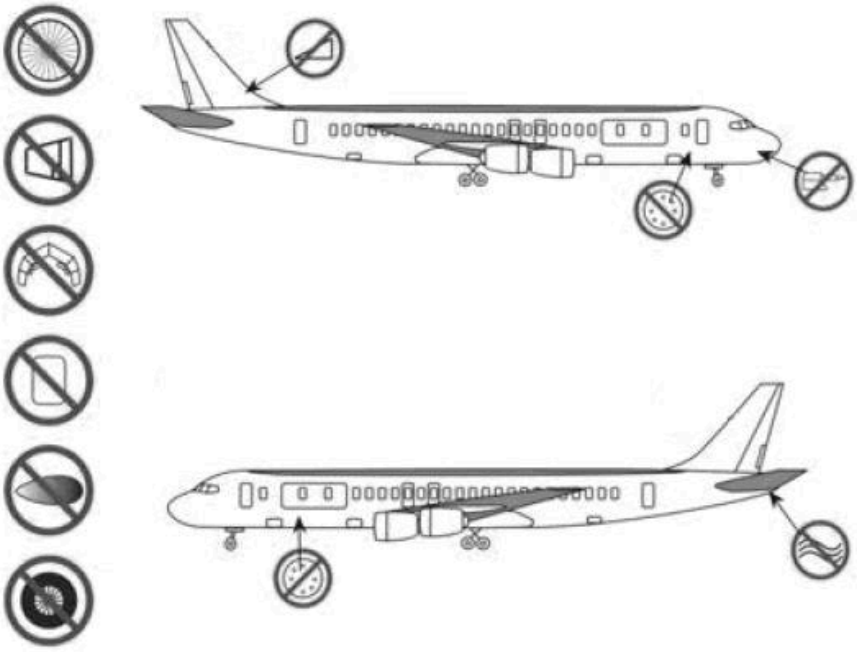

DC-8

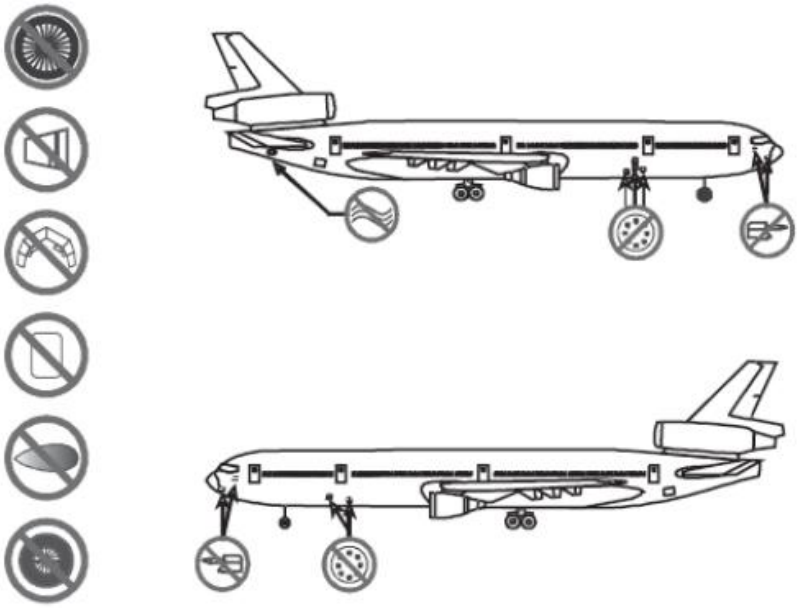

DC-10/MD-11

UNCONTROLLED DOCUMENT

UNCONTROLLED DOCUMENT

UNCONTROLLED DOCUMENT (26 SEPTEMBER 2024 15:09:28)

UNCONTROLLED DOCUMENT

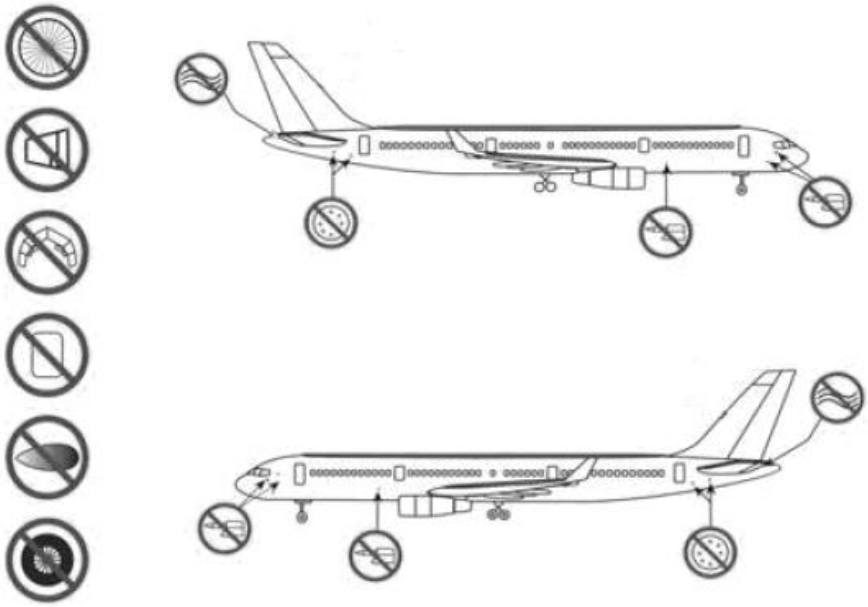

TU-204

UNCONTROLLED DOCUMENT

UNCONTROLLED DOCUMENT

UNCONTROLLED DOCUMENT (26 SEPTEMBER 2024 15:09:28)