UNCONTROLLED DOCUMENT

UNCONTROLLED DOCUMENT

3. Aircraft General Safety and Servicing Operations

Revision: 9
Date: 17 December 2024

3.1 Ramp Safety in Aircraft Handling

3.2 Safety During Fueling and Defueling

3.3 Adverse Weather Conditions

3.4 Hand Signals

3.5 Toilet Servicing

3.6 Potable Water Servicing

3.7 Aircraft Cleaning and Disinfection

3.8 Safety During Aircraft De-icing/Anti-icing Operations

3.9 Catering and In-Flight Supplies

3.10 Aircraft Security

UNCONTROLLED DOCUMENT

UNCONTROLLED DOCUMENT (17 DECEMBER 2024 16:19:13)

UNCONTROLLED DOCUMENT

Page	Date	Comment
18	12 December 2024	Americas Variance: The boom of belt loaders shall not be placed inside any portion of the aircraft.
21	17 December 2024	The maximum number of loaded dollies that a tug/tractor can tow is determined by: Local Airport Regulations, National Regulations. Tractor pulling capacity, Dolly capacity. The most restrictive of these criteria shall be applied. If local regulations do not specify the number of loaded dollies allowed, a maximum of four may be towed simultaneously.

UNCONTROLLED DOCUMENT

UNCONTROLLED DOCUMENT

UNCONTROLLED DOCUMENT (17 DECEMBER 2024 16:19:13)

UNCONTROLLED DOCUMENT

3.1 Ramp Safety in Aircraft Handling

The content of this chapter is based on *Chapter 3 – Aircraft General Safety and Servicing Operations* of the IATA Ground Operations Manual (IGOM).

Any Standards or Procedures which are specific to DHL Operations and therefore vary from or are in addition to IGOM Standard or Procedure shall be identified by a blue background, as demonstrated by this text.

3.1.1 Introduction

Ramp safety rules and procedures promote safe ground handling. Therefore, the minimum safety rules and procedures defined in this section shall always be applied and understood by all staff working on the ramp.

Aircraft damage can endanger passengers, staff and aircraft. Disruptions may also negatively impact safe airline operations.

Even a slight scratch or dent on an aircraft may result in a serious accident.

Any aircraft damage discovered or caused shall be reported. Refer to operating airline procedures regarding reporting of aircraft damage and the local authority.

No persons shall be allowed to access or work on a ramp/apron until an airside induction course has been successfully completed. For specific training requirements, see DHLAGOM **8. Training Standards**.

An aircraft shall not be utilized for any activities not related to the normal turnaround operations of that aircraft without prior documented approval from the operator. These activities include but are not limited to testing of ULD type load ability, new Ground Handling equipment, or non-documented procedures on or around the aircraft; or re-enactment of scenarios for occurrence investigations. The activities do not include On the Job Training (OJT) around an aircraft during live Operations.

Note: A prior Risk Assessment appropriate to the tasks and risks identified and approved by Global Airside may be required before final approval is granted by the operator.

All staff engaged in operational functions shall be physically and mentally fit to perform their assigned duties. It is the responsibility of the employee, in accordance to regional HR Policies, to inform the company, in confidence, of any condition, medical or psychological, that may adversely affect his ability to perform his assigned function.

The use of psychoactive substances such as, but not limited to, drugs and alcohol, prior to and during the performance of duties is strictly forbidden and must be monitored and controlled by supervisory staff and management at all levels.

Any member of staff found at work under the influence of alcohol or drugs will be suspended pending investigation and a review of their suitability to work airside should be undertaken.

UNCONTROLLED DOCUMENT (17 DECEMBER 2024 16:19:13)

UNCONTROLLED DOCUMENT

The following safety rules apply when handling cargo:

- Staff should never attempt to lift or move more than their personal physical capabilities or local regulations will allow.
- Lifting should be done with legs and arms. The back should be kept as straight as possible.
- All cargo should be slid into small places; it should not be lifted into place as this may cause fingers and hands to be jammed between objects.
- Handling cargo by the metal strapping, which is frequently used to bind heavy or awkward shipments, should be avoided, as severe lacerations can be caused.
- All cargo should be set down easily (not dropped) to avoid injuries to toes and feet as well as avoiding damage to aircraft flooring and shipments.
- When handling live animal cargo, fingers and hands should be kept clear of the interior of containers to avoid being bitten.
- When a poorly packed shipment is observed, the shipment shall be removed to the repacking area. All contents must be prevented from falling out and causing possible injury. This is particularly important when handling Dangerous Goods shipments.
- Cargo should be stowed as per DHL's ULD Build-up principles, in cargo carts with heavy pieces to the bottom and the centre to ensure stability. All gates and curtains should be secured to prevent loss of load.

The procedures and instructions listed in this manual in no way absolve staff from compliance with operator variances, regional variations, local mandatory government, airport or traffic laws applicable to their locality. If any conflict exists, then the most restrictive procedure or instruction will take precedence.

UNCONTROLLED DOCUMENT

UNCONTROLLED DOCUMENT

UNCONTROLLED DOCUMENT (17 DECEMBER 2024 16:19:13)

UNCONTROLLED DOCUMENT

3.1.2 General Ramp Safety

3.1.2.1 Engine Danger Areas

There is a particular risk of injury or damage in areas affected by aircraft engine intakes, exhausts and propellers. The risk is further increased if, for any reason, an aircraft stops and then applies additional thrust required to break away and continue its maneuver.

a. Vehicles and staff shall remain clear of aircraft danger areas when aircraft engines are running and/or the anti-collision lights are on.
b. To prevent incidents and accidents caused by aircraft engines, staff shall never position themselves or equipment in the following critical areas before/during aircraft departure and arrival:
    1. Engine intake area
    2. Engine blast area
    3. Propeller rotation area, where applicable
c. Ensure the engine intake/propeller rotation area is clear at all times when engines are running or when the engine is about to start.
d. It is forbidden to pass through the blast area while the engines are running.



Ground staff and/or equipment shall stay clear of the engine intake and blast areas.

UNCONTROLLED DOCUMENT

UNCONTROLLED DOCUMENT

UNCONTROLLED DOCUMENT (17 DECEMBER 2024 16:19:13)

UNCONTROLLED DOCUMENT

3.1.2.2 Engine Danger Area Diagrams

Note: *The extent of these areas varies for each aircraft type as well as whether the engines are at IDLE or BREAKAWAY thrust. Refer to the Aircraft Technical Specifications chapters for applicable distances.*

EXAMPLE OF ENGINE DANGER AREA - JET AIRCRAFT

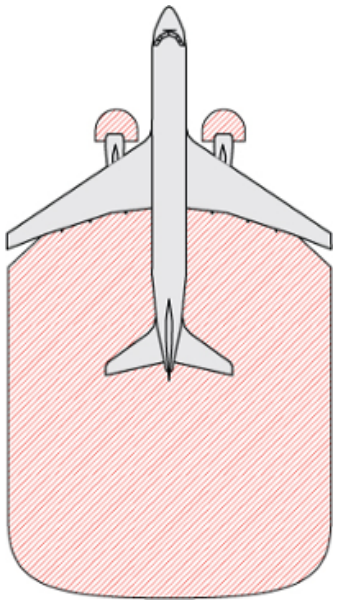

EXAMPLE OF ENGINE DANGER AREA - PROPELLER AIRCRAFT

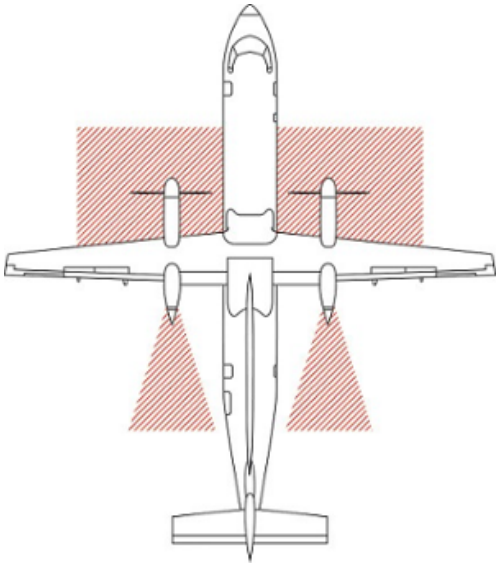

UNCONTROLLED DOCUMENT

UNCONTROLLED DOCUMENT

UNCONTROLLED DOCUMENT (17 DECEMBER 2024 16:19:13)

UNCONTROLLED DOCUMENT

UNCONTROLLED DOCUMENT

UNCONTROLLED DOCUMENT

3.1.2.3 Equipment Restraint Area (ERA) and Equipment Restraint Line

a. The equipment restraint area (ERA) is defined as the area of the apron where an aircraft is parked during ground operations. It may be indicated by a painted line (usually marked in white or red) on the apron.

   These painted lines shall only be used to define the ERA if the lines are **outside the engine intake area at idle power as defined in the Aircraft Technical Specifications chapters.** If this is not the case or if no markings exist, the concept of a “Circle of Safety” shall be used. This is an imaginary circle that extends approximately 3 metres (10 feet) from the aircraft wing tips, nose and tail.

b. The ERA shall be free of staff not involved in the aircraft arrival, obstructions, equipment (see exemption **4.1.4.1 - Ground Power Unit and Fixed Power Unit**) and foreign object debris (FOD) before and during aircraft arrival and departure.

For safety reasons, spillage should be cleaned immediately to reduce the risk of staff falling or risk of fire, in case of flammable substance spillage.

An example of an Equipment Restraint Line (Left) and a “Circle of Safety" (Right):

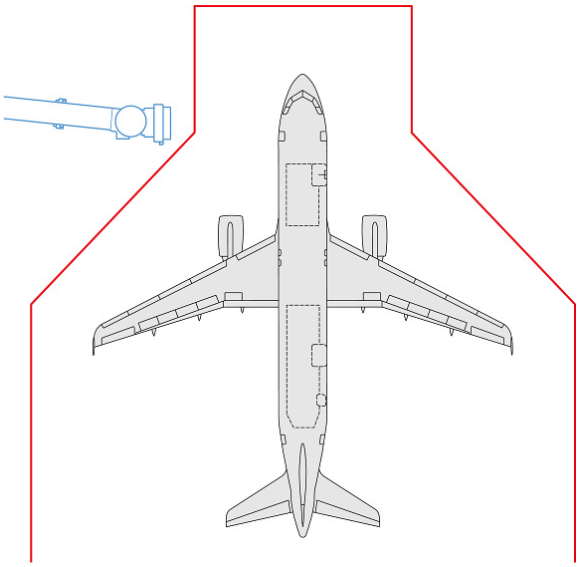



UNCONTROLLED DOCUMENT (17 DECEMBER 2024 16:19:13)

UNCONTROLLED DOCUMENT

UNCONTROLLED DOCUMENT

UNCONTROLLED DOCUMENT

3.1.2.4 Foreign Object Debris

a. Foreign Object Debris (FOD) applies to all loose objects that are a danger to the safety and integrity of aircraft or staff. FOD, therefore, shall not be left in any area where it would pose a hazard.
b. All staff have a responsibility to ensure the risk of damage to aircraft from FOD is minimized. All waste material shall be properly disposed of such that it does not become FOD and all FOD shall be removed and properly disposed of as soon as it is discovered.
c. Proper management of waste and debris is critical, as, if not disposed of correctly, it may become FOD. FOD can also move into airside locations during high winds.

Examples of FOD:

Plastic and paper: bags, sheets and towels

Metal: nuts and bolts, empty oil and hydraulic fluid cans, tools and equipment

Natural objects: rocks, pebbles and wood

Other debris: burst ballast bags, luggage handles and wheels, etc.



FOD can:

1. Be sucked or ingested into aircraft engines, causing damage leading to engine failure.
2. Cause damage to tires, the undercarriage, control systems and other parts of the airframe, which can lead to in-flight failures.
3. Become a trip hazard for staff working on or around aircraft.

d. The following FOD checks shall be conducted prior to any aircraft movement and after servicing operations:
    1. Check GSE staging and parking areas near the area of operation.
    2. Do routine checks of GSE (including floors of enclosed cabins) to ensure everything is secure and operational, and not about to fall off and become FOD.
    3. In ramp areas, ensure anything carried in/on a vehicle is secured.
    4. Before aircraft arrival, conduct a FOD walkaround of the aircraft parking stand, removing all FOD found.
    5. Dispose of all FOD in designated garbage bins, where provided or as per local arrangements. FOD bins should be enclosed, to avoid FOD being blown out by wind.

UNCONTROLLED DOCUMENT (17 DECEMBER 2024 16:19:13)

UNCONTROLLED DOCUMENT

It is the responsibility of all staff to be vigilant and look out for FOD on the ramp at all times.

FOD may result from:

- Failure to properly clean areas and account for removed objects, nuts, bolts, paper, plastic, drink containers/cups/cans, rags, pavement fragments, baggage components/tags, aircraft waste, catering equipment etc. used during the performance of any task.
- Inadequate housekeeping.
- Clean-up operations after severe weather.
- Failure to account for tools and parts.
- Failure to maintain ground support equipment, i.e. parts break off or fall off.
- Apron works in progress/construction sites.

Effective housekeeping to maintain a FOD free environment is key to FOD prevention. Regular inspections of areas where aircraft operate shall be conducted to detect and dispose of FOD. A full sweep of the cargo apron shall be conducted at minimum every two weeks to detect and dispose of FOD.

Management at DHL Express Gateways shall be responsible for implementing a pro-active FOD prevention policy, in order to actively promote a FOD free and safe environment. They shall:

- Be aware of local airport FOD control measures to ensure they are adequate
- Implement FOD control measures such as
    - Assign specific areas of responsibility for FOD prevention to staff
    - Ensure sufficient containers for FOD disposal are availabe
    - Provide FOD awareness signage and promotion
    - Review FOD incident reports and take corrective and preventive action

Ensure all staff working in the Airside environment are trained to recognise and dispose of FOD.

UNCONTROLLED DOCUMENT

UNCONTROLLED DOCUMENT

UNCONTROLLED DOCUMENT (17 DECEMBER 2024 16:19:13)

UNCONTROLLED DOCUMENT

UNCONTROLLED DOCUMENT

UNCONTROLLED DOCUMENT

3.1.2.5 Personal Protective Equipment

All staff shall be issued with and wear appropriate PPE as required for their role and as per local regulations to include:

a. Safety footwear
b. Hearing protection
c. High visibility clothing
d. Gloves
e. Any other specified PPE as per local requirements

Note: *Neckties or other loose hanging accessories which may pose risk shall be of the quick release type (clip).*

Hi-Vis clothing must conform, at a minimum to local requirements or, if none exist, to either EU standard EN20471 or ANSI Class-2 Level-2. Rubber gloves should be worn when handling electrical cables on a GPU.

See Americas Regional Variation **4.3.1 - Staff Safety**.

3.1.2.6 Use of Portable Electronic Devices during Ground Handling Activities

Portable Electronic Devices (PED) include any electronically powered portable device capable of voice calls, text messaging, and internet or mobile app usage. E.g. mobile phones, laptops, tablets, smartwatches, etc.

To prevent loss on board an aircraft or on the ramp, staff shall keep their PEDs securely stowed at all times while conducting ground handling activities, unless required for work-related activities.

In case a PED has been lost during handling of an aircraft, this shall be immediately reported to the loading supervisor. The supervisor shall pause loading/un-loading until the device has been recovered. If necessary, recovery of the device may include offloading the entire aircraft compartment where the device has been lost.

3.1.2.7 Aircraft Evacuation Procedures

Anyone seeing or discovering an emergency or potential emergency situation on an aircraft shall immediately inform the Loading Supervisor.

The Loading supervisor shall be responsible for co-ordinating the evacuation of all ground staff on board via the most appropriate exit, considering the use of passenger stairs or the high loader. Escape slides should only be used if there are no other safe methods of disembarking the aircraft.

The Loading Supervisor shall direct staff to a safe evacuation assembly area considering the conditions and inform the Airport and Emergency services.

Note: As per standard procedure, escape slides will be deactivated during turnaround operations. Slides will need to be reactivated prior to use.

UNCONTROLLED DOCUMENT (17 DECEMBER 2024 16:19:13)

UNCONTROLLED DOCUMENT

3.1.2.8 Spillage

Spills of any substance on the ramp shall be treated as Dangerous Goods until otherwise proven as they may pose a danger to staff.

In the event of a spillage the following action must be taken:

- Notify appropriate Ramp Supervision
- Do not step into or touch the spilled substance
- Take control and ensure people and equipment remain clear of the area around the spill
- Report the spillage as per local requirements

Spillage of DGR must also be reported in the RIR and RCIR Systems

If the spill area is spreading and only if it is safe to do so, an attempt may be made to control the spill by spreading absorbent material around the spill area.

UNCONTROLLED DOCUMENT

UNCONTROLLED DOCUMENT

UNCONTROLLED DOCUMENT (17 DECEMBER 2024 16:19:13)

UNCONTROLLED DOCUMENT

3.1.3 Safety Instructions for Operating and Working with Ground Support Equipment on the Ramp

3.1.3.1 General Safety Instructions

All staff members tasked with operating motorised equipment airside shall be in possession of an airside driving permit issued by relevant authorities. Permits shall be relevant to the type and size of equipment being used.

Extreme caution shall be exercised when entering aircraft holds and main decks from properly positioned and stabilised High-loaders, belt loaders or stairs.

Apply these procedures whenever operating GSE on the ramp:

a. Staff shall only drive or operate GSE if trained and authorized for that specific equipment type.

   This may include obtaining approval from a national authority to operate e.g. Fork Lifts. Qualifications for operating motorised equipment shall include initial and recurrent training, and regular performance reviews. Equipment operators should be qualified on the basis of both mental and physical requirements and be issued with a certificate of Competence, or appropriate training and documentation thereof, which will serve as a permit to operate relevant equipment.

b. GSE shall not be moved or driven across the path of:
   1. Taxiing aircraft or aircraft under tow/pushback
   2. Pedestrians, or embarking and disembarking crew or supernumeraries
   3. Emergency vehicles.

c. When operating any GSE, check the aircraft for possible damage in the equipment contact zone before positioning and after removal of GSE to/from the aircraft.
d. Immediately report any damage found, or where contact has taken place or suspected to have taken place (especially for composite aircraft), to a direct supervisor, aircraft engineer, or flight crew.
e. Where damage has been found or where contact has taken place or is suspected to have taken place, do not move any GSE to/from the aircraft in the area where damage has been found until inspection is completed, and clearance given to proceed.
f. Staff working with and around vehicles and equipment must keep their hands clear of moving equipment parts and pinch points, ensure loose hair is tied up or tucked away, and avoid wearing dangling accessories, loose clothing, jewellery or other similar items that may catch in equipment.
g. All drivers shall ensure they operate equipment within the rules of the law, as they apply locally, as well as in accordance with manufacturer’s recommendations.
h. Vehicles and equipment shall not be left unattended in clearways (usually marked with white zigzag lines or yellow or red hatching).
i. When operating at heights (such as de-icing rig baskets etc) the operator must wear an approved safety harness.

UNCONTROLLED DOCUMENT

UNCONTROLLED DOCUMENT

UNCONTROLLED DOCUMENT (17 DECEMBER 2024 16:19:13)

UNCONTROLLED DOCUMENT

3.1.3.2 Basic Operating Requirements for Ground Support Equipment

a. Securely stow GSE cables and hoses, where fitted, prior to transportation and when not in use.
b. GSE shall not obstruct the evacuation routes from aircraft or impede the accomplishment of other aircraft handling operations in progress unless there is an important reason to do so.
c. Check that all areas of GSE are free of contamination, FOD and safe for use prior to and throughout the operation.
d. Operators shall check the GSE assigned to them prior to initial use, particularly the parking brakes, rubber protective bumpers, and safety systems. If found to be defective, the GSE shall be reported, tagged as “Out of Service” (or “Unserviceable”/”UNS”) and immediately sent to the maintenance section for repair. Unserviceable equipment shall not be reintroduced to service before all reported faults have been rectified and the equipment has been signed off as being in serviceable condition by authorised staff (e.g. GSE Supervisor or Manager).
e. All safety rails shall be fully retracted/lowered prior to positioning, where possible.
f. Extra staff shall not be carried on moving GSE without an approved seat (i.e., apply the no seat–no ride principle).

   It may be allowed – given local approval – for a marshaller to stand on the foot-plates of a towbarless tractor while it is pushing-back an aircraft.

   Note: Exceptions can be made for training purposes, e.g. having an instructor standing on the platform of a HiLo (K-loader).
g. Seat belts shall be worn, where fitted, except where repositioning equipment is within the same operational area, e.g., within the parking stand or baggage makeup area.
h. Before moving any GSE/Vehicle ensure all its doors are closed, where fitted.
i. GSE shall not be operated while using handheld Portable Electronic Devices (PEDs).
j. GSE shall only be used for its intended purpose, including for specific aircraft types.
k. Prior to movement of any GSE/Vehicles, the intended travel path shall be checked and confirmed clear of staff, equipment or other obstacles.
l. GSE with lifting devices shall not be driven or towed in the raised position, except for final positioning onto the aircraft.
m. The GSE platform shall not be operated while in motion.
n. Use a guide person when vision is restricted. The guide person shall be able to accurately judge clearances and communicate signals to the driver/operator. Stop immediately if visual contact with the guide person is lost. Movement shall not continue until visual contact is re-established.

UNCONTROLLED DOCUMENT

UNCONTROLLED DOCUMENT

UNCONTROLLED DOCUMENT (17 DECEMBER 2024 16:19:13)

UNCONTROLLED DOCUMENT

o. Once motorized GSE is in its servicing position at or near the aircraft:

1. Apply the parking brake with the gear selector in park or neutral (if no selection for park).
2. Ensure that the wheels of the vehicle are positioned straight forward in alignment with the vehicle.
3. Turn off the engine, unless required when in operating/servicing mode.
4. Install GSE wheel chocks, where equipped.
5. If equipped with stabilizers, ensure they are deployed before the GSE is used for servicing. Deploy other safety devices (e.g., active proximity sensors, safety rails), if fitted.
6. When motorized GSE is in operating/servicing mode, remain in a position whereby the emergency controls can be promptly accessed. This includes the immediate vicinity of the controls or an immediately adjacent and accessible location; for example, the cargo hold in the case of a ULD loader, where required to operate the aircraft cargo loading system (CLS), restraints and/or nets.
7. If motorized GSE is not fitted with external emergency controls, the operator shall remain in the operating position and in control of the equipment when in operating/servicing mode.

   Note: *As an exception for pushback tractor, the engines may need to be left running unattended:*

   1. *While conducting a single person pushback operation*
   2. *To avoid specific restart by maintenance function*

   If unattended, apply the parking brake and place the gear selector in park, or neutral if no selector for park.

p. When GSE is chocked:

1. Place one chock at the front and one chock at the rear of the same wheel.
2. Chocks shall be centered on and in contact with the wheel.

q. When unattended motorized GSE/vehicle is positioned in or adjacent to the ERA, other than as described in point (o):

1. Turn off the engine. In extreme cold weather conditions where local procedures permit engines running unattended, the motorized GSE shall be chocked.
2. Apply the parking brake with the gear selector in park or neutral, (if no selection for park) and, where equipped, install wheel chocks.

r. The ground power unit (GPU) and preconditioned air (PCA) may be left running unattended when connected to the aircraft, provided the serviceability and fuel levels are checked periodically.

s. A No-Touch policy (i.e., GSE shall not touch the aircraft) shall be employed for all GSE types.

1. GSE and passenger boarding bridge (PBB) not equipped with self-leveling sensors shall be positioned in a way to ensure that:
   i. The protective rubber bumpers do not touch the aircraft fuselage to allow vertical movement of the aircraft during the whole ground handling process.
   ii. The gap between GSE and aircraft shall not allow a person or large piece of equipment to fall through. As a guideline, a gap of 5 cm (2 in.) or two fingers should be maintained between the device and the aircraft.
2. Maintain clearance between the GSE and the aircraft fuselage at all times.

Exception:
No-Touch policy does not apply to belt loaders which are designed to go into the hold of the aircraft.

UNCONTROLLED DOCUMENT (17 DECEMBER 2024 16:19:13)

UNCONTROLLED DOCUMENT

t. When positioning GSE to the aircraft, check that throughout the turnaround process a clearance is maintained between the GSE and the fuselage to allow vertical movement.
u. All safety rails shall be fully retracted/lowered during positioning and removal, where possible.
v. After positioning equipment on the aircraft, raise or extend all safety rails on conveyor belts, loaders, and other elevated devices, except where restricted by the aircraft type.
w. GSE shall be parked in the designated airside equipment parking areas when not in use.
x. Access to firefighting equipment or the fuel hydrant emergency stop switch shall not be obstructed.

Note: *For GSE operations during adverse weather refer to* ***3.3 - Adverse Weather Conditions*** .

3.1.3.3 Non-motorized Ground Support Equipment

The following precautions shall be taken when operating non-motorized GSE:

a. When parked and/or when not connected to motorized vehicles, all non-motorized GSE shall have brakes set or chocks in place, with the exception of aircraft towbars.
b. ULDs shall be secured on dollies (or trailers/trucks) using the appropriate restraints.
c. Pallet and container dollies may only be towed with turntables in the locked position (straight ahead).
d. The number of carts and dollies allowed is usually limited by the local airport authority or ground handling service provider, however, in critical conditions (e.g., slippery surface conditions, congested facilities, low visibility) the number should be reevaluated and might be reduced to ensure safe operations on the ramp.
e. Know the dolly types as some dollies are not compatible with others. Follow the recommended towing combinations when transferring dollies from one place to another. Do not tow more units than the recommended sets or combinations.
f. When connecting or disconnecting dollies/carts to/from the tow bar, hold only the tow bar handle and tow pin of the dollies/carts. Do not hold the tow eye when connecting or disconnecting.
g. Position oneself beside the tow bar when connecting or disconnecting dollies/trolleys ensuring the tow-pin is properly inserted before towing and use the tow bar handle to connect and or disconnect dollies/trolleys.
h. During transportation with carts and dollies, the load shall be properly secured using appropriate locks, stops, rails, curtains and straps.
i. The overall height of loads shall permit safe lifting of each piece of the load during loading and offloading of carts by staff standing on the ground.
j. Light packages shall not be wedged between heavier items.
k. When using tarpaulins, all straps shall be securely fastened to the baggage cart.
l. If equipped with stabilizers, ensure they are deployed before the GSE is used for servicing or access. Deploy other safety devices (e.g., active proximity sensors, handrails), if fitted.
m. If using maintenance stairs e.g., to open and close cargo hold doors:
    1. The stairs shall be fitted with safety rails to prevent falls.
    2. Maintenance stairs should be facing towards the panel which is being accessed. Retractable/extendable safety rails shall be lowered or retracted during positioning.
    3. Raise or extend retractable/extendable safety rails prior to any staff accessing the stairs.
    4. Moving or repositioning the stairs is not permitted while any staff is on the stairs.
n. Towable air start units (ASU), PCA and GPU shall not be connected to the tow vehicle and aircraft at the same time, if possible. Before towing the unit away, the operator shall ensure the unit is disconnected from the aircraft.



While the movement of carts and dollies by hand is very simple, it can result in injuries. Therefore, additional care shall be taken.

UNCONTROLLED DOCUMENT (17 DECEMBER 2024 16:19:13)

UNCONTROLLED DOCUMENT

UNCONTROLLED DOCUMENT

UNCONTROLLED DOCUMENT

3.1.3.4 Safely Driving and Parking Ground Support Equipment Inside the Equipment Restraint Area (ERA)

To verify the serviceability of GSE and test the apron surfaces, operators shall apply the following precautions when driving or parking GSE within the ERA:

a. Make one complete stop with all motorized GSE prior to entering the ERA or Circle of Safety.
b. GSE shall not be driven faster than 5 km/h or 3 mph (walking speed).
c. Manoeuvre GSE carefully to prevent personal injury and/or aircraft damage.
d. Avoid performing sharp turns near the aircraft, particularly when towing equipment.

When towing equipment near the aircraft, approach the aircraft on a path parallel to the fuselage and park in a parallel position.

e. When GSE is being moved near the aircraft or positioned to the aircraft, regardless of visibility conditions, the operator shall be guided by a guide person using standard IATA signals. If visual contact with the guide person(s) is lost, the GSE operator shall stop movement of the GSE immediately. Movement shall not restart until visual contact is re-established.
f. GSE that is not directly involved in the handling or servicing of the aircraft shall not be driven through or parked within the ERA.
g. Any GSE (e.g., tractors, pallet transporters, carts and dollies) shall not be driven or positioned under the aircraft fuselage unless specifically required e.g., lavatory servicing, aircraft maintenance, towbarless tractor etc.
h. No equipment shall be driven, towed or parked beneath any part of an aircraft unless required for the servicing of that aircraft and approved by the operator.

If empty dollies are required to pass under a wing to gain access to the HiLo, then the driver must use a guide man to ensure clearance from the aircraft if he cannot see all sides of his vehicle from the cab. Under no circumstances shall loaded dollies be towed underneath any part of the aircraft, including wings and tail.

Note: For Boeing 747 operations, it is sometimes required to drive the tug and dolly train underneath the wing and between the engines in order to access the hi-loader for the on/offloading process. This process applies for both the main-deck and the AFT Lower deck. If this process is to be carried out, it shall be done so in accordance with the following requirements:

- Only empty dollies may be transported under the wing of the aircraft.
- Additional cones shall be placed on the inner edged of the engines to mark a clear path – see diagram below for location of additional cones.
- Where visibility is restricted, a guide / banks man shall be present to ensure sufficient distance is maintained between the tug and the engines.
- The complete route (entry, underwing and exit) shall be maintained at all times. The path shall be clear of people, vehicles and any other ramp equipment.
- Confirmation shall be received from engineering / maintenance that all planned engine work has been carried out, or it has been agreed to be conducted after the full loading / off-loading of the main-deck / lower-deck (as appropriate) has been completed.
- Driving under the wing shall be avoided when the aircraft is being refuelled due to the possibility of fuel spillage as a result of over fuelling.

UNCONTROLLED DOCUMENT (17 DECEMBER 2024 16:19:13)

UNCONTROLLED DOCUMENT

Once it is confirmed that the above requirements have been met, the process may be carried out as per the arrows shown in the diagram below.

Path of tug and dollies, including entry and exit:

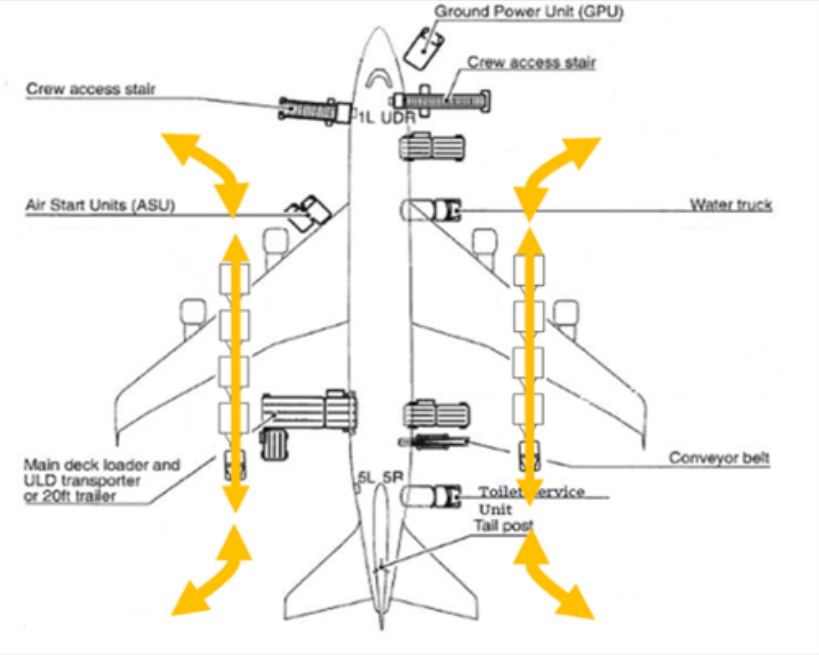

Placement of additional cones (applicable for whichever wing is being driven under):

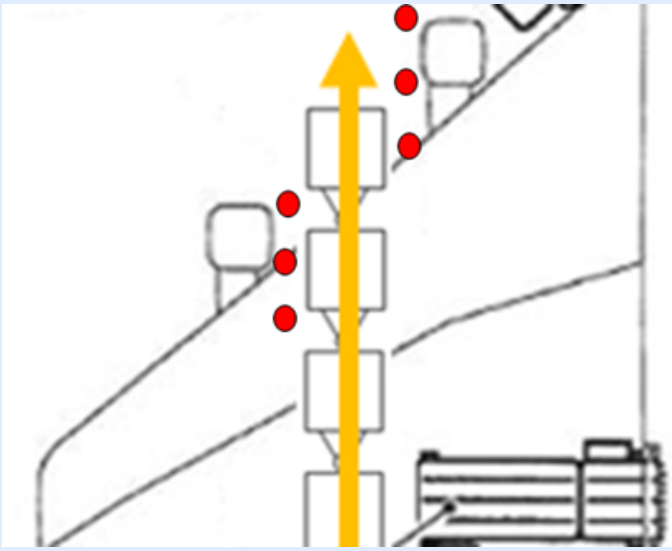

3.1.3.5 Passenger Boarding Bridge (PBB)

The use of Passenger Boarding Bridges is not applicable in the DHL network.

UNCONTROLLED DOCUMENT (17 DECEMBER 2024 16:19:13)

UNCONTROLLED DOCUMENT

3.1.3.6 Passenger Stairs

Entering and leaving aircraft cabins shall be done by properly positioned and stabilised stairs.

Stairs shall have an inclination angle between 30 and 45 degrees, steps of uniform height, and platforms of sufficient width for the aircraft type to cover the open doorway with no gaps large enough to result in a fall risk. Additionally, the safety rails shall have a minimum height of 1.1m (43”).

The following precautions shall also be taken when operating passenger stairs:

a. Check that the walking surfaces are free of contamination and safe for use.
b. Ensure the movement path is clear of staff, equipment/vehicles and all other obstacles before moving the passenger stairs.
c. If passenger stairs are towed, they shall be disconnected them from the tractor at a distance of 3m from the aircraft, then manually positioned at the aircraft. Ensure brakes are engaged once stairs are positioned to the aircraft.
d. Ensure safety rails and canopies, if any, on the passenger stair platform are fully retracted prior to positioning.
e. Move the passenger stairs slowly toward the aircraft, avoiding any aircraft sensors or protrusions, until either:
    1. Where the passenger stairs are equipped with self levelling device, continue movement until either the protective bumpers just touch the aircraft or the passenger stair proximity sensors stop the movement.
    2. When not equipped with self levelling device, maintain a gap in accordance with No-Touch policy. Refer to **3.1.3.2 - Basic Operating Requirements for Ground Support Equipment** (s).
f. The controls shall only be operated from inside the driver’s cabin of the passenger stairs except where equipped with external controls.
g. Maintain adequate clearance between the passenger stairs and the underside of the cabin access door, or as directed by the cabin door markings, to prevent damage.
h. Stairs shall be positioned parallel to the contour of the door sill, to prevent corner point impact damage.
i. Engage any safety systems and auto-leveler features, if applicable. If the passenger stairs are not equipped with an auto-leveler, adjust the level of the passenger stairs before positioning on to the aircraft. Within 3m of the aircraft, the level of the passenger stairs shall be monitored and adjusted, as required. In final position, the top platform shall be 20cm (8in) below the door sill. The distance between the top platform and the door sill shall be monitored throughout the aircraft turnaround, ensuring that it remains between 10cm and 40cm. If the distance exceeds this range, stop loading/un-loading and inform the flight crew and/or maintenance in order to coordinate readjustment and repositioning of the passenger stairs.
j. Ensure that stairs are correctly locked in position. On hydraulically operated stairs, the stairs are to be lowered onto locking pins following adjustment. Stairs shall not be supported by hydraulics only, as in the event of hydraulic failure this can cause injury to staff and damage to aircraft.
k. Deploy stabilizers, if fitted. Do not allow anyone (except the operator) to use the stairs until the stabilizers are deployed.
l. Ensure passenger stairs are positioned so that the cabin access door can be used as an unobstructed escape route in case of emergency.
m. Passenger stairs shall not be removed from the aircraft door unless the cabin access door is closed or a fall prevention device is in place across the door. Refer to **4.4.2.1 - General** (b).
n. After the cabin access door has been closed, confirm there is no staff on the stairs prior to retracting stabilizers.
o. Before stairs are removed from the aircraft, notify the flight crew of the intention to remove the stairs.
p. If passenger stairs are towed when removed from the aircraft, manually position them to a distance of 3m from the aircraft before connecting them to the tractor.

UNCONTROLLED DOCUMENT (17 DECEMBER 2024 16:19:13)

UNCONTROLLED DOCUMENT

UNCONTROLLED DOCUMENT

UNCONTROLLED DOCUMENT

3.1.3.7 Belt Loader

The following precautions shall also be taken when operating a belt loader:

a. Stop operating the conveyor belt or raise or lower the boom when staff are on the belt.
b. Do not stand or walk on the conveyor belt when the safety rails are lowered/retracted.
c. Do not sit or stand on a conveyor belt while it is in operation, nor while the boom is raised or lowered.
d. Belt loaders shall not be used to transport baggage, cargo or other items across the ramp.
e. A guide person shall always be used to guide the belt loader into final position.
f. When allowed by the aircraft operator, and in order to avoid back strain, the boom may be placed just inside (ca. 25 cm / 10 inches) the aircraft hold. The guide person shall guide the placement of the boom inside the hold.

Americas Variance: The boom of belt loaders shall not be placed inside any portion of the aircraft.

g. Position and remove a belt loader to/from the aircraft in a straight line.
h. Position the boom at an angle to the cargo hold doorsill that will:
    1. Allow tractors/trailers to access the belt loader without impeding slide deployment areas and passenger evacuation routes.
    2. Prevent items and staff from falling between the boom and doorsill.
i. Once the belt loader is positioned ensure the wheels are left in straight ahead position.

Speeding up operation of the conveyor belt using the accelerator pedal is not permitted.

j. Where clearance allows, always raise the side safety rail as soon as the belt loader is positioned. Ensure it does not touch the aircraft fuselage

Where clearance allows, always raise the side safety rail as soon as the belt loader is positioned. Ensure it does not touch the aircraft fuselage

k. The safety rail shall also be deployed when a belt loader is used to gain access to aircraft cargo holds or cargo door controls.
l. Ensure proper separation between articles and appropriate belt speed to avoid jamming.
m. When unloading or loading items onto a belt loader, ensure they are stable, and correctly positioned on the conveyor belt to avoid items falling off.
n. When unloading or loading items between the belt and aircraft cargo hold, ensure items do not come into contact with aircraft fuselage/cargo hold door.
o. Adjust the back of the conveyor belt correctly to avoid dropping goods from the belt.
p. The safety rail may be lowered to accommodate large items during loading and unloading.
q. Ensure the boom is clear of the aircraft or other obstacles before making a turn.

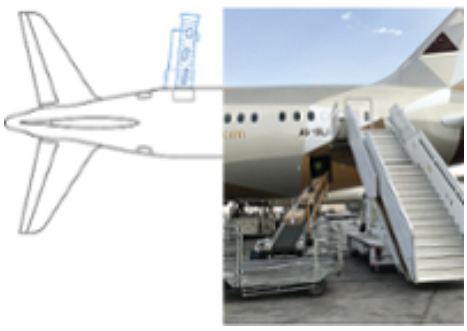

UNCONTROLLED DOCUMENT (17 DECEMBER 2024 16:19:13)

UNCONTROLLED DOCUMENT

UNCONTROLLED DOCUMENT

UNCONTROLLED DOCUMENT

3.1.3.8 Unit Load Device Loader (i.e. High-loader or K-loader)

The following precautions shall also be taken when operating a ULD loader:

a. Lower both platforms prior to maneuvering the ULD loader.
b. Only staff required for the ULD Loader operation shall be on the platform while maneuvering.
c. Ensure that the ULD guide rails are retracted before positioning the ULD loader at the aircraft. Use ULD loader platform guide rails, as required, to ensure alignment when loading or unloading
d. Move the ULD loader slowly toward the aircraft, avoiding any aircraft sensors or wing fairings.
e. When approaching the aircraft, a guide person shall be used. It is the role of the guide person to:

- Ensure a clear path of entry into or exit from the ERA or circle of safety
- Visually check that all rails and folding wings are set appropriately
- Ensure that the ULD loader's approach or exit is clear of the aircraft engine(s)
- Verbally warn the ULD loader operator of obstacles and engine clearance

Once the ULD loader has reached a distance of 3m (10 ft) from the aircraft fuselage, the ULD loader operator shall take full responsibility for the final positioning of the ULD loader. The guide person shall remain in place to monitor the approach and, if needed, verbally warn the ULD loader operator of obstacles and engine clearance.

f. Ensure the ULD loader platform is level with the height and angle of the cargo compartment floor.
g. Maintain a gap of 5-8cm (2-3in) between the ULD loader platform and the door sill guard or aircraft door lip.
h. Do not open/close cargo access hold doors while standing on a ULD loader. Use maintenance stairs in accordance with **3.1.3.3 - Non-motorized Ground Support Equipment** (m) or a belt loader in accordance with **3.1.3.7 - Belt Loader**

Note: Not applicable to main deck cargo access doors, which shall be operated from inside (on applicable aircraft types) or from a Main Deck ULD Loader.

i. The door sill guard shall remain in the up position until the high-loader is in position. Once the hi-loader is positioned, the door sill guard shall be lowered by the Hi-Loader Operator prior to raising the platform to final door height.
j. Once the platform is in final position, extend all guard rails.
k. Engage any safety systems and auto-leveler features, if applicable. If the ULD loader is not equipped with an auto-leveler, the level of the ULD loader shall be constantly monitored and adjusted as required (e.g., edge of cargo hold opening, cargo access hold door, control panel doors, fairings on fuselage and wings).
l. The ULD loader front platform shall be fully lowered prior to staff ascending or descending the equipment stairs and the platform shall not be raised or lowered when staff are using the stairs. Always check the surrounding area and ensure its clear to raise/lower the ULD loader platform.

In cases where a HiLo/K-loader Personal Safety Cage is mounted on the elevator and designed to allow passengers to ride the HiLo/K-Loader elevator from the ground to aircraft deck level safely, staff must be trained on the operation of the safety cage before they can use/operate it.

m. Ensure no one stands between the ULD loader and dollies during ULD movement and during dolly positioning.
n. Align dollies correctly to the ULD loader. Use a guide person, if required.
o. ULD loaders should not be used to transport ULDs across the ramp unless specifically designed for this purpose.

UNCONTROLLED DOCUMENT (17 DECEMBER 2024 16:19:13)

UNCONTROLLED DOCUMENT

p. Move ULDs only when staff are clear of all hazards.
q. The vehicle (dolly or other) shall be positioned close to the ULD loader platform periphery and shall be at the same height before the transfer takes place.
r. The use of external mechanical force to move ULDs should not be necessary, except with very heavy ULDs that may not move by manual force alone. Any such process shall be carried out with approved equipment and procedures.
s. Whilst maneuvering ULD when it is on the ULD loader, ensure:
    1. The platform(s) is clear of all staff.
    2. All stoppers are raised to prevent ULD from falling.
    3. Immediate area around the ULD loader is clear of all staff and equipment.
    4. ULD is only rotated on the rear platform and when in the fully lowered position.
    5. Only one ULD is rotated at a time.
t. All staff shall keep clear of the elevating platform when it is being raised or lowered.
u. Before removal or repositioning of a ULD loader ensure any load positioned in the doorway is secured against roll out.
v. For main deck loading/unloading operations, prior to removing the ULD loader the equipment operator shall inform staff inside the main deck and receive confirmation from them that it is safe to remove the equipment. On board safety devices (e.g., safety barrier net) shall be installed at the door prior to ULD loader removal.
w. Whenever possible, reverse in a straight line at a walking pace, monitoring all sides for clearance.
x. Ensure the path of the ULD loader is clear of all obstructions prior to initiating turns.

Note: The ULD loader shall be positioned at a 90-degree angle to the cargo doorsill.



Do not enter or place any part of the body inside the scissor area beneath the ULD loader.

Extreme caution shall be exercised when moving ULDs between the high-loader and dollies. If a Ramp Agent needs to access the space between the dollies and the high-loader platform, they must communicate this with the high-loader operator so the high-loader operations can be temporarily halted. The Ramp Agent shall only access the space between the dollies and the high-loader platform once they have received positive confirmation to proceed from the high-loader operator or respective intermediary colleague.

3.1.3.9 Elevating Equipment

Elevating equipment (E.g. Catering or Cleaning trucks, passenger transports) are not used in the DHL network.

UNCONTROLLED DOCUMENT (17 DECEMBER 2024 16:19:13)

UNCONTROLLED DOCUMENT

UNCONTROLLED DOCUMENT

UNCONTROLLED DOCUMENT

3.1.3.10 Tractor / Electric Baggage Tug

The following precautions shall also be taken when operating a tractor or electric baggage tug (EBT) and towing dollies/baggage carts:

a. Take care to avoid sudden sharp turns, jerks and stops.

> **Note:** Trains of dollies tend to 'drift in' or shorten when turning corners. Avoid turning prior to, or immediately after, an obstacle to avoid collisions.

b. Prior to moving with towed load, ensure there are no staff between or near the towed load.
c. Only transport baggage, cargo, or other items in the designated areas, if equipped.
d. Use the remote push button control (inching operation) to connect dollies, carts, or towed load, where fitted.
e. When Tractor/EBT is near the belt loader during aircraft handling, a gap of at least 1 m (3 ft.) shall be maintained.

   Note: Where necessary to position carts/dollies within 1 m (3 ft.) of the belt loader, adjust the position of the carts/dollies by hand.

f. When removing carts during the loading on or unloading from smaller aircraft or aircraft with low wings, the tractor shall be positioned pointing away from the aircraft wing and the cart maneuvered by hand to the tractor, as required.
g. The appropriate type of dolly shall be used according to the ULD type to transport the load.
h. Keep an appropriate distance between dolly and ULD loader during loading and unloading process. To avoid ULD falls, realign the dolly if the distance between ULD loader and dolly is unsafe.
i. Ensure ULD is fully transferred onto the ULD loader before moving the Tractor/EBT.
j. Ensure all the ULDs are secured on the dollies and flaps, or curtains are closed before transporting.
k. Ensure where possible dollies/carts are connected as a chain, apply brake, and insert chocks where applicable, to avoid the movement.

Prior to towing equipment, the driver shall ensure that:

- The connections are securely latched
- The tractor is not connected to any equipment the driver does not intend to tow
- The horn is activated to alert other staff members of the imminent movement of the tractor/dolly train

> **Note:** If this is not possible due to local regulations, a guide person must be used when other staff are in the vicinity of the tractor/dolly train.

The doors of containers shall be closed and secured before being towed on service roads even when empty as serious injury could be caused to drivers of other vehicles should these doors blow about.

The maximum number of loaded dollies that a tug/tractor can tow is determined by the following criteria:

- Local Airport Regulations
- National Regulations
- Tractor pulling capacity (Max gross weight = 20t)
- Dolly capacity (10 foot dolly: Max. gross weight <8t. 20 foot dolly: Max. gross weight <29.5t)

The most restrictive of these criteria shall be applied. If local regulations do not specify the number of loaded dollies allowed, a maximum of four may be towed simultaneously.

UNCONTROLLED DOCUMENT (17 DECEMBER 2024 16:19:13)

UNCONTROLLED DOCUMENT

Staff shall not pass between dollies whilst they are attached to a tractor, as it may move unexpectedly and cause serious injury.

As an exception to the above rule, provided the on- or un-loading operation is marshalled and controlled, it is allowed for dedicated staff to pass between/over dollies for the sole purpose of transferring and locking/un-locking of ULDs.

A person shall be nominated and agreed by those involved in the operation to control the movement of people and equipment. The nominated person must remain aware, at all times, of the position of the staff performing the operation, and not release the driver to move until satisfied all staff are clear of any hazard area.

The tractor driver must always apply the parking brake when the tractor is stationary and not start to move until cleared to do so by the nominated person.

Note: In the Americas region, the tractor shall always be turned off when the driver exits the vehicle.

3.1.3.11 ULD Transporter

The following precautions shall also be taken when operating ULD transporters:

a. No staff are allowed to sit or stand on the roller bed.
b. No staff are allowed to walk or stand between the ULD transporter and ULD loader/dollies.
c. Position the ULD transporter at a 90-degree angle to the ULD loader/dolly to ensure safe transfer of load.
d. If fitted with an elevating platform (narrow body ULD Loader):
    1. Transportation of ULDs across the ramp with the platform in the raised position is not permitted.
    2. Raise the platform only when finally positioned at the aircraft.

Note: For combined ULD transporter/loader devices, refer to **3.1.3.8 - Unit Load Device Loader (i.e. High-loader or K-loader)** for further precautions.

3.1.3.12 Air Start Unit

a. The ASU shall be positioned as shown in the GSE positioning diagram in the Aircraft Technical Specifications chapters.
b. When positioning an ASU, a safe path of entry and exit shall be established and maintained.
c. ASU shall be operated in accordance with the technical specifications of the Original Equipment Manufacturer (OEM).
d. Only staff involved in the engine start or push-back of the aircraft shall be inside the ERA or Circle of Safety during engine start.
e. Once the pressurised air supply has been switched off, ensure that the hose is fully collapsed before disconnecting the hose(s) from the aircraft.

UNCONTROLLED DOCUMENT (17 DECEMBER 2024 16:19:13)

UNCONTROLLED DOCUMENT

3.1.3.13 Fork-Lift Trucks and Other Non-Approved GSE

The use of forklift trucks, or any other equipment not designed and approved for loading and un-loading of aircraft (loading equipment described in this manual is considered approved for loading and un-loading), is not allowed to function in such a capacity.

Exceptions may be sought from Regional Airside management for the following:

- Use of forklift trucks for bulk loaded aircraft such as the ATR42 for heavy items.
- Forklift trucks with slave / transfer pallets for use on An-12 and An-26 aircraft only.

3.1.3.14 Maintaining Ground Support Equipment

Local station management shall be responsible for implementing a GSE maintenance program at their location. Records of any maintenance carried out on GSE shall be kept by local station management.

Motorized GSE shall be inspected and maintained according to manufacturer recommended maintenance requirements and frequency.

Non-motorized GSE shall be inspected at a minimum once per year according to manufacturer recommendations, in order to maintain serviceability.

UNCONTROLLED DOCUMENT

UNCONTROLLED DOCUMENT

UNCONTROLLED DOCUMENT (17 DECEMBER 2024 16:19:13)

UNCONTROLLED DOCUMENT

3.1.4 Fire

3.1.4.1 Fire Prevention and Protection

Staff must always be vigilant for fire hazards and potential sources of fires in their areas of operation and try to mitigate or eliminate them during the operations (e.g., fueling and defueling operations, open wires, dangerous goods handling, GPU connections and use of electrical equipment). To eliminate conditions that may lead to fire:

a. Staff must never smoke airside except in a designated smoking area.
b. All staff shall be familiar with the location and use of firefighting equipment, fire alarms, fuel hydrant emergency shut-off valve, etc.
c. All staff must be familiar with assembly points.
d. Emergency exits must be kept clear/unobstructed at all times.
e. Exercise good housekeeping in the airside areas to eliminate the risk of fire.
f. Dispose of garbage into the designated waste bin and do not allow garbage to accumulate.
g. All fuel/oil leakages must be contained as soon as possible, and the area cordoned off. (e.g., using safety cones, caution tape).
h. Smoke from GSEs/vehicles must be reported immediately.
i. Do not refuel any GSE/equipment while the engine is running any GSE/equipment while the engine is running or while using electronic devices.
j. GSEs/vehicles should only be parked as follows:
    1. Within the defined equipment parking areas;
    2. In a manner that does not obstruct access to firefighting equipment and the fuel hydrant emergency shut-off valve.

UNCONTROLLED DOCUMENT

UNCONTROLLED DOCUMENT

UNCONTROLLED DOCUMENT (17 DECEMBER 2024 16:19:13)

UNCONTROLLED DOCUMENT

3.1.4.2 Actions in the Event of a Fire

a. In the event of a fire the following actions must be taken:

1. Stop the activity/process, if applicable to the type of event (e.g., switch off engine/activate emergency stop button).
2. Ensure all staff (unless involved in mitigating actions) are moved away from the incident, and ensure nobody re-enters the area.
3. Immediately notify the relevant parties and any staff directly involved or impacted by the nature of the incident (e.g., flight crew).
4. Report the event to the supervisor/line manager and emergency services, if deemed necessary, who will then assume responsibility to initiate the local response plan:
    i. Secure the event area.
    ii. Ensure compliance with all instructions from emergency services, if applicable.
    iii. Report to the airline representative and, as required, to local authorities and be in constant communication.
    iv. Complete incident/accident report(s) as required to collect all relevant information regarding the event (see AHM 650).
    v. Support any post-incident investigation, analysis and/or review.

The actions, as documented above, are not in chronological order, which will depend on the nature and severity of the event.

If it is safe to do so, an attempt may be made to extinguish the fire with portable extinguishers. However, extreme caution must be taken as the many flammable parts and equipment on the aircraft and, possibly, in the cargo could cause a seemingly small fire to flare up or even cause an explosion. **If in doubt, remain clear and wait for emergency services.**

b. In event of GSE/vehicle fire, additionally, carry out an assessment and only if considered safe to do so:

1. Fight the fire using available fire extinguishers.
2. Move affected GSEs/vehicles away from the aircraft and operational area to the extent practical.
3. In case the affected GSEs/vehicles cannot be moved, move adjacent GSEs/vehicles away to avoid spreading the fire.

UNCONTROLLED DOCUMENT

UNCONTROLLED DOCUMENT

UNCONTROLLED DOCUMENT (17 DECEMBER 2024 16:19:13)

UNCONTROLLED DOCUMENT

3.2 Safety During Fueling and Defueling

All ramp staff should receive a briefing on the local procedures to be followed in the event of a fire or fuel spillage.

Before fuelling commences the loading supervisor must make themselves known to the fuelling person as a point of contact in the event of an emergency or a problem during re-fuelling. They will then become responsible for ensuring that, if it should become necessary, all persons on the aircraft are evacuated safely. The loading supervisor shall be responsible for communication with all persons on board the aircraft throughout the fueling process.

Passenger stairs must remain connected to the aircraft throughout refuelling in order to allow for emergency evacuation. The ground area around the passenger stairs and below any other available aircraft exit doors shall be kept clear of obstructions.

3.2.1 Fueling Safety Zone (FSZ)

The Fueling Safety Zone (FSZ) is defined as an area of at least 3 m (10 ft.) in any direction from the center point of all fuel vent exits, refueling plugs, aircraft refueling ports, fuel hydrants, fuel hoses and fueling vehicles. This distance may be increased as required by local airport or civil aviation authorities.

EXAMPLE OF FUELING SAFETY ZONE–JET AIRCRAFT

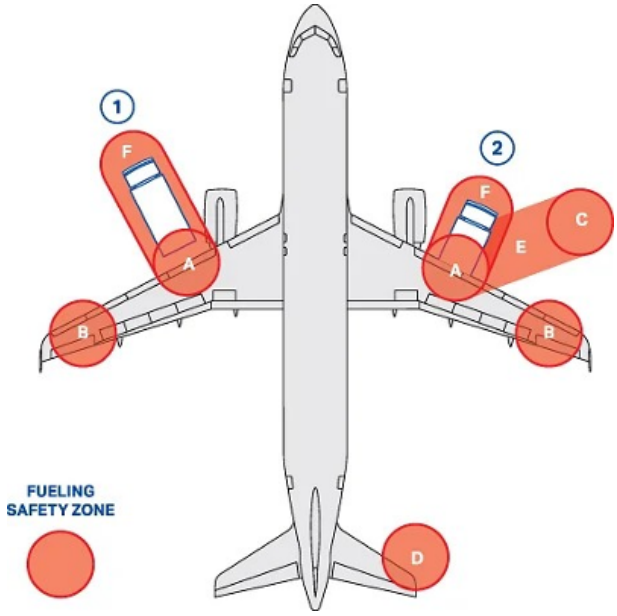

Reference	Description
A	Aircraft refueling port/plug
B	Fuel vent exit
C	Fuel hydrant pit
D	Fuel vent exit (according to the aircraft type)
E	Hoses
F	Fuel truck or hydrant dispenser
1	Fuel Truck
2	Hydrant dispenser

UNCONTROLLED DOCUMENT (17 DECEMBER 2024 16:19:13)

UNCONTROLLED DOCUMENT

EXAMPLE OF FUELING SAFETY ZONE–PROPELLER AIRCRAFT

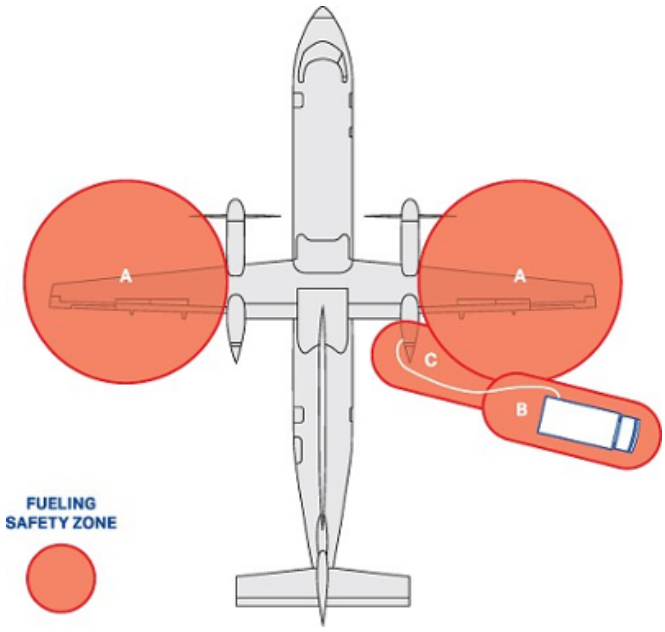

References	Description
A	Aircraft refueling port/plug/fuel vent exit
B	Fuel truck or hydrant dispenser
C	Hoses

Within the FSZ, all staff shall ensure they:

a. Do not smoke or use any items like matches or welding, which may cause open flames.
b. Do not use any handheld Portable Electronic Devices or headsets.
c. Enter the FSZ only when required to do so by the current job task/responsibility.
d. Assume that fueling is taking place anytime a fuel vehicle is on the stand during aircraft servicing and fuel hoses are connected.
e. Do not leave vehicle engines running unnecessarily.
f. Position all GSE and vehicles so they do not obstruct the fueling vehicles' escape route; this is not a mandatory requirement for hydrant type fueling vehicles, but every effort should be made to ensure a clear exit pathway.
g. Avoid the use of motorized GSE in the FSZ.
h. Do not park any GSE in the FSZ.
i. Ensure fuel hoses are protected and all equipment is kept a minimum of 1 m (3 ft.) away from any fuel hose on the stand that is connected between a fuel truck and an aircraft. Do not drive over fuel hoses.

UNCONTROLLED DOCUMENT

UNCONTROLLED DOCUMENT

UNCONTROLLED DOCUMENT (17 DECEMBER 2024 16:19:13)

UNCONTROLLED DOCUMENT

3.2.2 Fuel Spillage

Take the following safety measures whenever a fuel spill occurs:

a. Activate the emergency shut-off valve, where installed.
b. Alert the person in charge of fueling and/or the pilot-in-command.
c. Contact the local fire service, if not already done.
d. Verify with authorities/supervisor whether to stop all activity around the aircraft and/or evacuate the aircraft and immediate area.
e. As far as possible, restrict all activities inside and outside the spill area to prevent access and to reduce the risk of ignition. Appoint a fire guard to establish a restricted area around the spill, whose responsibility it is to prevent any operations or access by unauthorised persons until the spill has been cleared.

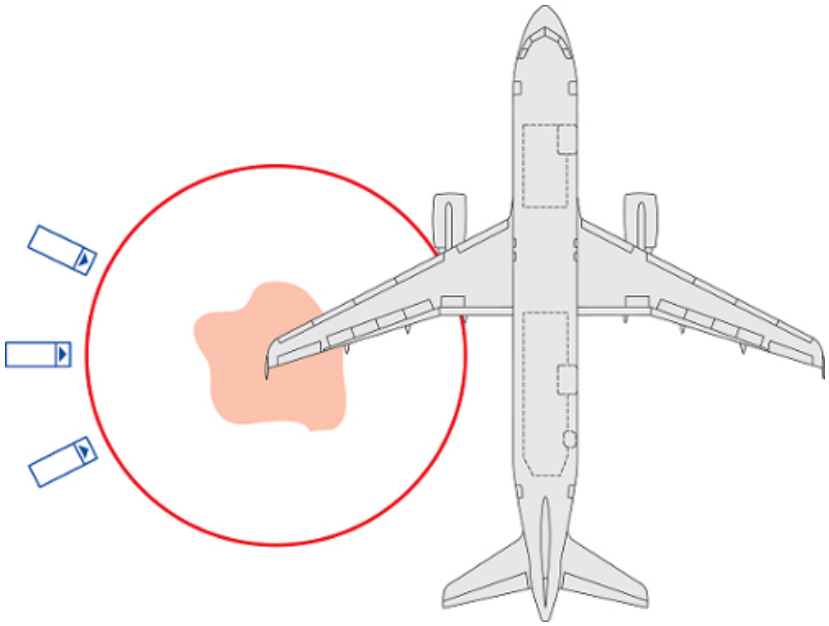

The spilled fuel should be cleared in accordance with local airport regulations and the aircraft towed to another bay for loading. If this is not possible, aircraft engines must not be started until the aircraft is pushed clear of the spill area.

All spills of liquids, fuels or any other substance that could have an environmental impact must be reported.

3.2.3 Fueling / Defueling with Passengers on Board

DHL does not carry passengers on its aircraft.

UNCONTROLLED DOCUMENT

UNCONTROLLED DOCUMENT

UNCONTROLLED DOCUMENT (17 DECEMBER 2024 16:19:13)

UNCONTROLLED DOCUMENT

3.3 Adverse Weather Conditions

3.3.1 General

Airside operational staff should use the following procedures during adverse or poor weather conditions, which may have a negative impact on aircraft handling activities and ground safety. If additional information is required, refer to supervisory staff.

3.3.2 Winter or Slippery Apron Conditions

Winter weather brings extra hazards, which require awareness and more care on the part of staff working on the apron to prevent accidents. The following precautions to reduce accident risk shall be taken:

a. Plan additional time for all ramp activities and take extra care when walking across apron surfaces, which can be slippery.
b. Take extra care when driving, especially when approaching the aircraft. Remember that GSE require greater distances to stop safely on slippery surfaces.
c. Operators of potable water tankers and toilet servicing units shall be vigilant that there is no spillage or leakage that can lead to subsequent freezing. Care shall be taken to keep spillage and overflow to a minimum.
d. If apron conditions are hazardous, contact the competent authority to mitigate the hazard. In the event the hazard cannot be mitigated, suspend the affected operations.
e. Close all entrance and cargo hold doors as soon as possible and keep them closed to avoid precipitation entry into the aircraft.



Reduce speeds in slippery apron conditions. Adjust all activities and operations on the ramp to suit the conditions at the time.

3.3.3 Thunderstorms and Lightning

3.3.3.1 Work Instructions During Thunderstorms and Lightning

On receipt of an ALERT:

a. Make preparations for the STOP phase.
    1. Suspend nonessential activities in open areas and ensure any staff using or about to use headsets are informed of the alert.
    2. Fueling operations can continue, however, the proximity of the thunderstorm/lightning should be continually monitored.
    3. Avoid using highly conductive equipment.

b. On receipt of a STOP order:
    1. Stop fueling and detach hoses from aircraft. Fueling hoses cannot be left attached to the aircraft during any thunderstorm/lightning event.
    2. Discontinue aircraft communication by headset.
    3. Stop all ramp activity and clear ramp.
    4. Staff should seek shelter inside buildings or metal-bodied vehicles. No one should seek shelter under any part of the aircraft, loading bridge, near light poles, fences, under trees.
    5. In accordance with local procedures, aircraft may come on the stand, but the aircraft doors should remain closed and ground servicing suspended.



Failure to follow procedures could result in a fatal accident.

UNCONTROLLED DOCUMENT (17 DECEMBER 2024 16:19:13)

UNCONTROLLED DOCUMENT

Levels	Action
Amber–ALERT Lightning activity is detected at a distance in excess of 8 km (5 miles) from the operation.	Disseminate lightning warning to airside operating staff so they can prepare and plan their activities to be ready in case of a Red Alert in accordance with local regulatory requirements.
Red–STOP/SUSPEND Lightning activity is detected within 5 km (3 miles) of the operation.	Disseminate the order to stop all airside activities and seek shelter to all airside operating staff.
Green–ALL CLEAR Lightning activity has moved beyond 5 km (3 miles) and is heading away from the operation.	Disseminate the order to resume normal activities to all airside operating staff.

Note: The distances referred to above may vary depending on local climatic parameters.

3.3.3.2 Lightning Alert Callout

In the absence of an integrated airport notification system, all airside operating staff shall be aware of the following procedures:

a. Use the counting method to detect/predict lightning activity. Determine the corresponding level based on the counting method diagram; see **3.3.3.3 - Counting Method**.
b. The responsible person notifies all airside operating staff of the lightning alert level. If the person responsible is not available, the counting method should be used by all airside operating staff for self-protection.
c. In case of a Red Alert, proceed to a designated shelter.

3.3.3.3 Counting Method

The counting method is used when an integrated airport notification system is absent. It is used to estimate the level of lightning activity.

Counting Method Chart:

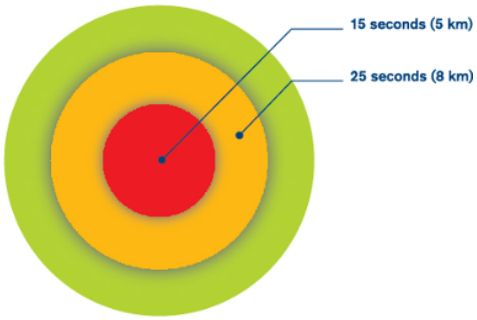

Notes:

1. The time indicated is the time between observing the lightning and hearing the sound of thunder.
2. If the counted time is less than 15 seconds, the lightning activity is less than 5 km from the airport.
3. If the counted time is between 15 seconds and 25 seconds, the lightning activity is between 5 and 8 km from the airport.

UNCONTROLLED DOCUMENT (17 DECEMBER 2024 16:19:13)

UNCONTROLLED DOCUMENT

3.3.4 High Wind Conditions

High winds pose a great risk of damage and the following minimum precautions should be taken:

a. Ensure the safety of the aircraft by installing additional chocks and removing all equipment from around the aircraft.
b. Take extreme care when opening or closing any aircraft doors.
c. Ensure parking brakes are set on all parked GSE.
d. Set parking brakes and secure by additional means, if necessary, all non-motorized ramp GSE (i.e., baggage carts, ULD dollies).

3.3.5 High Winds Activity Table

The following actions shall be taken when sustained winds and/or gusts of wind 25 knots (kts) or greater are predicted; however, it is the actual wind speed at the aircraft parking position that constitutes the risk for injuries and damage.

Staff Actions	25 to 39 kts (46 to 72 km/h)	40 to 59 kts (73 to 110 km/h)	Above 60 kts (Above 111 km/h)
Chock aircraft landing gear as per Aircraft Out of Service/Night Stop/High Wind; see **4.2.2 - Chock Placement Diagrams**.	✓	✓	✓
Remove safety cones	✓	✓	✓
Secure PCA hoses	✓	✓	✓
Remove FOD	✓	✓	✓
Secure ULDs	✓	✓	✓
Ballast any empty ULD which will be loaded on an aircraft with a minimum weight equal to the tare weight of the ULD	✓	✓	✓
Do not load light cargo on belt loaders	✓	✓	✓
Secure rolling stock	✓	✓	✓
Strap all propellers on propeller aircraft	✓	✓	✓
Close cargo hold, passenger doors and access panels[1]		✓	✓
Do not initiate the elevation of high-lift equipment and stairs		✓	✓
Park GSE closely together and adjacent to a building, if possible			✓

[1] Loading operations can continue up to the limit of door operation for the aircraft type involved as defined in Strong Winds Conditions section of the Aircraft Technical Specifications chapters



High winds pose a great risk of damage and injury.

UNCONTROLLED DOCUMENT

UNCONTROLLED DOCUMENT

UNCONTROLLED DOCUMENT (17 DECEMBER 2024 16:19:13)

UNCONTROLLED DOCUMENT

3.3.6 Sandstorms and Low Visibility

The following minimum precautions should be taken:

a. Issue appropriate PPE such as goggles, masks and covered clothing.
b. Ensure the provision of shelter, as required.

3.3.7 Intense Heat

The following minimum precautions should be taken:

a. Issue appropriate PPE (i.e., covered clothing).
b. Ensure the provision of rehydration for staff.
c. Ensure the provision of a temperature-controlled environment during rest breaks.

During periods of hot weather, modern 'Glass cockpit' aircraft are susceptible to heat.

At STD -180 minutes, if the aircraft is in **direct sunlight** and with an **Outside Air Temp (OAT) of 25°C or above**, consideration should be given to providing ground conditioned air (ACU) in order to avoid a technical delay due to equipment cooling. To reduce the environmental impact, the air conditioning unit shall be turned off once the flight crew have arrived at the aircraft and the cockpit has cooled down to an acceptable level to ensure safe start-up of the glass cockpit equipment. If further equipment cooling is required, air conditioning can be requested by the flight crew.

If an aircraft is planned to be parked for more than 6 hours in direct sunlight and the outside temperature is, or is anticipated to be, above 25 °C then toilet service shall be performed directly after aircraft arrival.

3.3.8 Freezing Conditions

Temperature Trigger	Action
Below 0ºC (32ºF)	Remove potable water from the aircraft and only return once cabin heating has been applied in the aircraft for 30 minutes. Consider draining toilets if the aircraft will remain out of service for more than 24 hours in these conditions. Fit engine blanking covers, as per operator requirements (**Americas Variance:** engine blanking covers shall only be fitted by engineering / maintenance.
Below -5ºC (27ºF)	Apply cabin heating at STD -150 minutes. Cabin heating (of gas or electric type only) can be removed once Flight Crew have boarded the aircraft.

Care should be taken to limit the amount of de-icing fluids, grit and salt that enters the aircraft either through the crew door by personnel or through the cargo door on the base of ULDs. Snow mats, if used, shall be removed from the cabin access door area prior to aircraft departure.

In case of severe cold there is a risk equipment may freeze and become inoperable. If necessary, steps shall be taken to ensure equipment does not freeze, e.g. by storing it inside a heated facility.

Engine heating will be required if snow or ice has entered the engine whilst the engine is cold, normally after day-stopping during snow/sleet precipitation. A common method of engine heating is to apply heated air to the rear of the engine whilst the blanking covers are fitted to the front. Seek advice from Regional Airside if this procedure is required.

UNCONTROLLED DOCUMENT (17 DECEMBER 2024 16:19:13)

UNCONTROLLED DOCUMENT

3.3.9 Severe Precipitation

The ingress of water in any form (rain, snow, sleet etc. See definitions below) can cause serious damage to aircraft electrical systems. In order to minimise the risk during periods of severe precipitation the following procedures must be observed.

3.3.9.1 Definition of Severe Precipitation

Heavy Rain	Rainfall so heavy, that it splashes off hard surfaces and quickly forms standing water puddles on the ground and GSE and/or restricts visibility
Driving Rain	Can be lighter than heavy rain but is being blown at least 30° from the vertical by the wind and in to doorways and sheltered areas
Heavy Sleet	Sleet falling so hard that the pellets are bouncing off the ground at least 3 cm (1.25 in)
Driving Sleet	Can be lighter than heavy sleet but is being blown at least 30° from the vertical by the wind and in to doorways and sheltered areas
Heavy Snow	Snowfall so heavy, that it restricts visibility and is falling at 4 cm (1.75 in) per hour so that it quickly forms a ground cover
Driving Snow	May be lighter than heavy snow, but is being driven at least 30° from the vertical by the wind and in to doorways and sheltered areas

3.3.9.2 Protection of Aircraft and Freight

To prevent unwanted ingress of water to the aircraft interior, thereby possibly creating a risk to flight safety, measures shall be taken to ensure the safety of the aircraft.

During periods of Severe Precipitation, all exterior aircraft doors shall be closed immediately. Aircraft doors shall only be opened when access is required.

If an accumulation of water and/or snow is identified within the aircraft, a member of the flight crew or operator representative shall be notified before any attempt is made to clear the area. Water ingested into the aircraft has the potential to compromise flight safety, therefore, a member of the flight crew or operator representative may wish to check the location of any accumulation of water in order to ensure the aircraft safety has not been compromised.

3.3.9.3 Container Doors and Curtains

During periods of severe precipitation, all container doors and curtains shall be closed to prevent water ingress. During periods of precipitation, doors / curtains should only be opened for loading/unloading operations e.g. for transferring loose load shipments onto the conveyor belt.

During severe precipitation conditions, all ULDs destined for uplift by air shall always be covered in an extra layer of plastic over the cargo net before leaving the warehouse. The extra layer shall be removed immediately prior to loading the ULD onboard an aircraft.

ULDs shall be checked immediately prior to loading, and any excess water or snow that may have accumulated on the outside of the ULD (roof of containers, top of pallets and on edges) shall be removed before the ULD is allowed inside aircraft.

UNCONTROLLED DOCUMENT (17 DECEMBER 2024 16:19:13)

UNCONTROLLED DOCUMENT

3.4 Hand Signals

3.4.1 Introduction

To standardize ground staff to ground staff communication and/or ground staff to flight crew communication and/or flight crew to ground staff communication, the following hand signals are defined:

a. Guide Person Hand Signals–to be used by a specific guide person in direct liaison with the GSE operator to facilitate movements of any type of GSE.
b. Marshaling Hand Signals–to be used by ground staff to assist the flight crew during maneuvering of the aircraft and engine starting.
c. Technical/Servicing Hand Signals–to be used by ground staff to communicate technical/servicing information to flight crew, and by flight crew to communicate technical/servicing information to ground staff.

Notes:

1. Only use hand signals when verbal communication is not possible.
2. Ensure acknowledgement of all signals is received.

d. Aircraft Movement Hand Signals–to be used during the tractor/towbar or towbarless connection/disconnection process, as well as at the start and end of the aircraft ground movement operation.

3.4.2 General Conditions for Using Hand Signals

The person giving the hand signals shall:

a. Use only approved hand signals.
b. Wear a high visibility vest.
c. Maintain the same role throughout the procedure.
d. Keep in constant visual contact with the other ground staff and flight crew throughout the manoeuvre. If visual contact is lost, the operation must stop and not recommence until visual contact is reestablished.
e. Remain clear of the intended pathway of the vehicle/aircraft, where possible.
f. Be positioned so that clearance from the aircraft, other equipment, vehicles or facilities can be accurately judged, and signals can be visually communicated to the GSE operator.

UNCONTROLLED DOCUMENT

UNCONTROLLED DOCUMENT

UNCONTROLLED DOCUMENT (17 DECEMBER 2024 16:19:13)

UNCONTROLLED DOCUMENT

3.4.3 Specific Requirements for Using Marshalling Hand Signals

a. Perform aircraft marshaling only if permitted by the local airport authority and staff have been trained and authorized.
b. Give marshaling hand signals from a position forward of the aircraft while facing and within view of the flight crew.
c. Wear a high visibility vest.
d. Use illuminated flashlights/wands to improve the visibility of the hand signals in the following situations:
    1. Insufficient apron lighting
    2. Poor visibility
    3. Night conditions
    4. When required by local airport authorities or regulations



To avoid any possible confusion by the flight crew, do not use guide person hand signals for equipment until all aircraft marshaling has been completed.

Notes:

1. The hand signals on the following pages are illustrated with the use of wands. The meaning of the signals remains the same when bats, gloves or illuminated flashlights are used.
2. It is not possible to give signals for engaging/releasing parking brakes with the use of bats or illuminated flashlights.

UNCONTROLLED DOCUMENT

UNCONTROLLED DOCUMENT

UNCONTROLLED DOCUMENT (17 DECEMBER 2024 16:19:13)

UNCONTROLLED DOCUMENT

3.4.4 Guide Person Hand Signals for Ground Support Equipment

3.4.4.1 To Attract the Operator's Attention and Take Command



Arms held above the head in a vertical position with palms facing forward.

Meaning: I am in charge of this maneuver. You will take orders only from me.

3.4.4.2 Forward Movement



Arms held above the head with elbows a little bent and palms facing backward; repeatedly move arms upward and backward, beckoning onward.

Meaning: Move toward the guide person.

3.4.4.3 Backward Movement



Arms by the sides, palms facing forward, swept forward and upward repeatedly.

Meaning: Move directly away from the guide person.

UNCONTROLLED DOCUMENT (17 DECEMBER 2024 16:19:13)

UNCONTROLLED DOCUMENT

3.4.4.4 Turn Right (from the driver's point of view)



Left arm pointed downward, hand extended; right arm repeatedly moved upward and downward toward the guide person's left. Speed of arm movement indicates rate of turn.

3.4.4.5 Turn Left (from the driver's point of view)



Right arm pointed downward, hand extended; left arm repeatedly moved upward and downward toward the guide person's right. Speed of arm movement indicates rate of turn.

3.4.4.6 Lift



Stretch both arms toward load and/or equipment, palms up, hand movement in upward direction.

UNCONTROLLED DOCUMENT

UNCONTROLLED DOCUMENT

UNCONTROLLED DOCUMENT (17 DECEMBER 2024 16:19:13)

UNCONTROLLED DOCUMENT

3.4.4.7 Lower



Stretch both arms toward load and/or equipment, palms down, hand movement in downward direction.

3.4.4.8 Accompanied Movement



Come with load or equipment. Maintain eye contact with operator/driver. Swing down opposite arm.

3.4.4.9 Indicate Distance



Raise arms above head, palms facing inward. Distance shown between hands shall correspond exactly with actual margin.

UNCONTROLLED DOCUMENT

UNCONTROLLED DOCUMENT

UNCONTROLLED DOCUMENT (17 DECEMBER 2024 16:19:13)

UNCONTROLLED DOCUMENT

3.4.4.10 Stop



Arms raised and crossed over head, palm forward.

Immediate stop: Hands cross over head with clenched fists.

3.4.4.11 OK



Lift right arm above head, hand closed, thumb raised.

Meaning: All is clear or continue on your own or drive away.

3.4.4.12 Chocks Inserted, Stabilizers On



Arms down, hands closed, palms facing backward, thumbs extended; move arms in toward sides.

UNCONTROLLED DOCUMENT

UNCONTROLLED DOCUMENT

UNCONTROLLED DOCUMENT (17 DECEMBER 2024 16:19:13)

UNCONTROLLED DOCUMENT

UNCONTROLLED DOCUMENT

UNCONTROLLED DOCUMENT

3.4.4.13 Chocks Removed, Stabilizers Off



Arms down, hands closed, palms facing forward, thumbs extended; move arms out away from sides.

3.4.4.14 To Interrupt Power Source (electricity, fuel, air)



Right arm and hand level with shoulder, palm downward; swing extended arm horizontally toward throat by bending elbow.

3.4.4.15 Stop Engine



Right arm and hand level with shoulder, palm downward, hand on throat making horizontal move to the right, passing hand across throat.

UNCONTROLLED DOCUMENT (17 DECEMBER 2024 16:19:13)

UNCONTROLLED DOCUMENT

3.4.4.16 To Connect or Disconnect



Raise left arm and hand in front of body, fingers extended horizontally, palm down.

Connect: Right hand with clenched fist moving upward to contact left palm

Disconnect: Right hand with clenched fist leaving left palm downward.

3.4.4.17 Brakes On/Off



Right arm and hand raised horizontally in front of body.

Release brakes: With fist clenched, extend fingers, palm inward.

Engage brakes: With extended fingers, clench fist, palm inward.

UNCONTROLLED DOCUMENT

UNCONTROLLED DOCUMENT

UNCONTROLLED DOCUMENT (17 DECEMBER 2024 16:19:13)

UNCONTROLLED DOCUMENT

3.4.5 Aircraft Movement Hand Signals – Headset Operator to Tractor Driver

3.4.5.1 Vehicle Brakes Off



Raise right hand just above shoulder height with closed fist and **ensuring eye contact with tractor driver** open palm toward driver.

3.4.5.2 Clear to Push



Hold arm straight out at a 90° angle from shoulder and display hand with thumb up.

Meaning: Indicates to tractor driver that all equipment is clear of aircraft, chocks have been removed, the aircraft brakes are off and flight crew has given clearance to commence pushback.

3.4.5.3 Negative/Hold



Hold arm straight out at 90° angle from shoulder and display hand with thumb down.

Meaning: Indicates to tractor driver that aircraft is not ready for pushback and to hold position.

UNCONTROLLED DOCUMENT (17 DECEMBER 2024 16:19:13)

UNCONTROLLED DOCUMENT

3.4.5.4 Vehicle Brakes On/Stop



Raise hand just above shoulder height with open palm and **ensuring eye contact with tractor driver**, close into a fist. At the end of the pushback, also indicates to tug driver that aircraft brakes have been set. Tractor driver should return signal to the headset operator to confirm vehicle brakes set.

3.4.5.5 Slow Down



With hand at a 45° angle downward to the side, make a patting motion.

3.4.5.6 Change of Pushback Direction



Touch nose with finger with arm at a 90° angle to the shoulder, extend arm to point in the direction that aircraft needs to be turned to.

UNCONTROLLED DOCUMENT (17 DECEMBER 2024 16:19:13)

UNCONTROLLED DOCUMENT

3.4.6 Aircraft Movement Hand Signals–Wing Walker to Headset Operator, Tractor Driver, Marshaller, Flight Crew (as applicable)

3.4.6.1 Clear to Move Aircraft

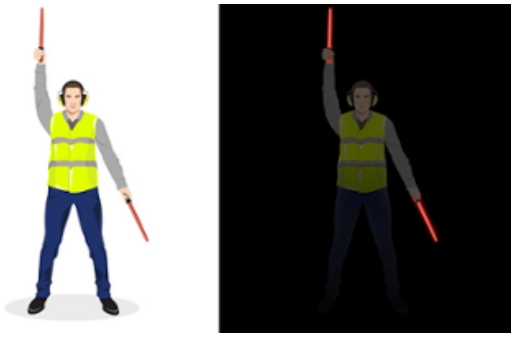

Raise right arm fully extended above head with wand held straight and left arm and wand at a 45° angle downward to the side.

3.4.6.2 Stop Movement of Aircraft

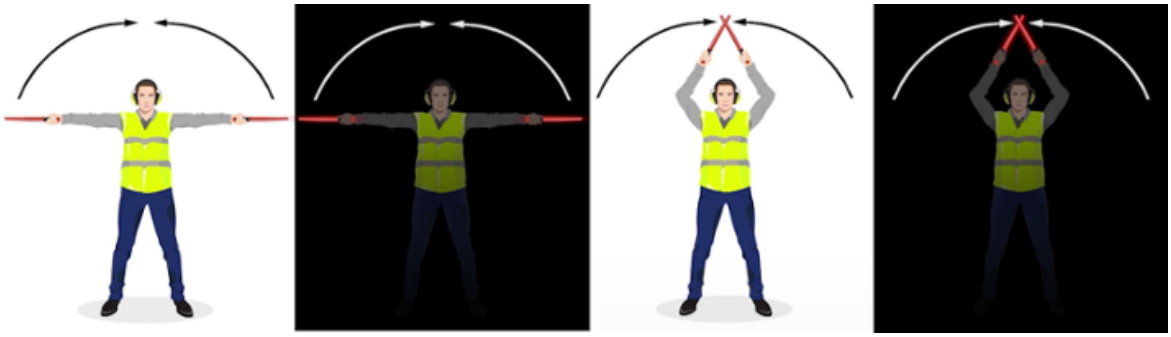

Fully extend arms and wands horizontally 90° at shoulder level; raise arms and wands to cross above head.

3.4.6.3 Hold Movement of Aircraft



Fully extend arms and wands downward at a 45° angle to the sides. Hold this position until it is clear for the aircraft to move.

UNCONTROLLED DOCUMENT

UNCONTROLLED DOCUMENT

UNCONTROLLED DOCUMENT (17 DECEMBER 2024 16:19:13)

UNCONTROLLED DOCUMENT

3.4.7 Marshalling Hand Signals for Aircraft

3.4.7.1 Identify Gate/Stand

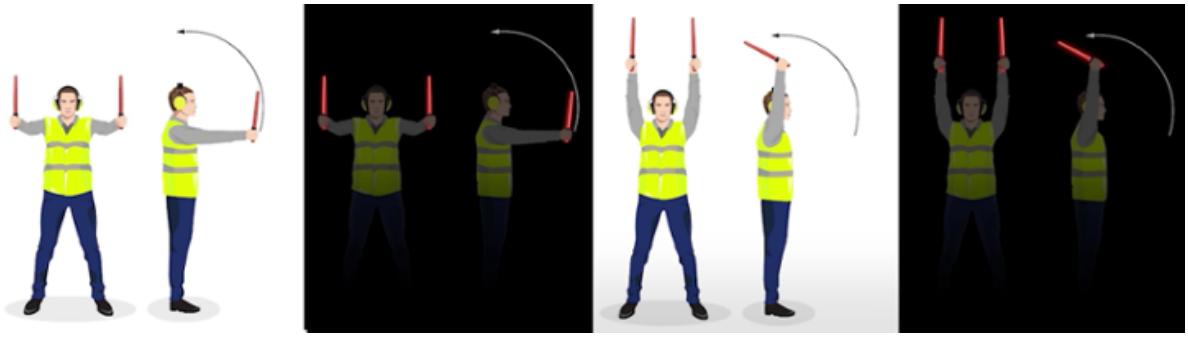

Raise fully extended arms forward at shoulder level; raise straight above head with wands pointing up, move hands forward and backward to keep from blending into background.

3.4.7.2 Continue to Taxi Straight Ahead



Holding arms extended to the side; bend arms at elbows; move arms and wands up and down from waist to head.

3.4.7.3 Slow Down



Arms held at sides and slightly bent at elbows; move arms downward in a patting gesture, moving wands up and down from waist to knees.

UNCONTROLLED DOCUMENT (17 DECEMBER 2024 16:19:13)

UNCONTROLLED DOCUMENT

UNCONTROLLED DOCUMENT

UNCONTROLLED DOCUMENT

3.4.7.4 Turn Right (from the flight crew's point of view)



With left arm and wand extended at a 90° angle to the body, right hand makes the come ahead signal. The rate of signal motion indicates to the flight crew the rate of aircraft movement desired.

3.4.7.5 Turn Left (from the flight crew's point of view)



With right arm and wand extended at a 90° angle to the body, left hand makes the come ahead signal. The rate of signal motion indicates to the flight crew the rate of aircraft movement desired.

3.4.7.6 Stop

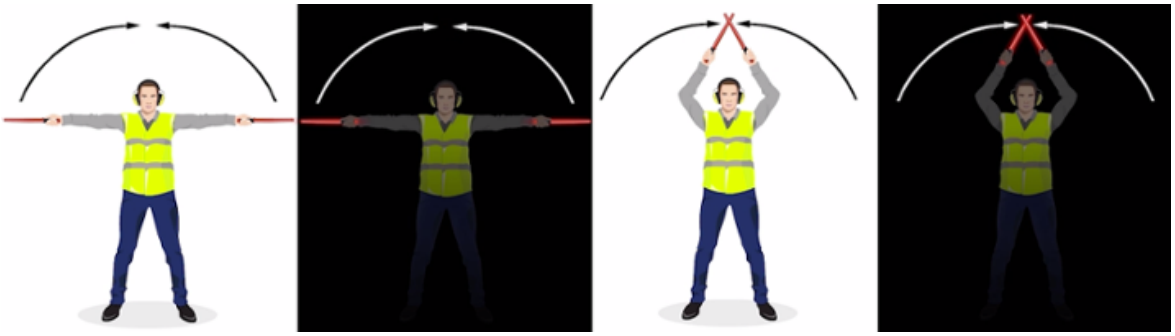

Fully extend arms and wands horizontally 90° at shoulder level; raise arms and wands to cross above head.

UNCONTROLLED DOCUMENT (17 DECEMBER 2024 16:19:13)

UNCONTROLLED DOCUMENT

UNCONTROLLED DOCUMENT

UNCONTROLLED DOCUMENT

3.4.7.7 Hold Position/Standby



Fully extend arms and wands downward at a 45° angle to the sides. Hold the position until the aircraft is clear for the next maneuver.

3.4.7.8 Proceed to Next Marshaller or as Directed by Tower/Ground Control

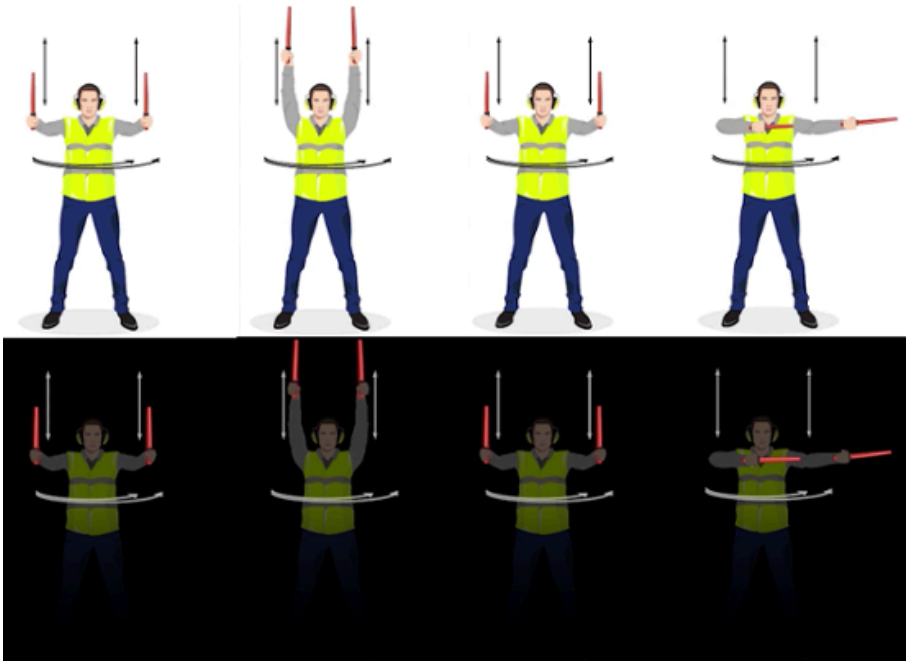

Point both arms upward, move and extend arms outward to side of body and point with wands to direction of next marshaller or taxi area.

UNCONTROLLED DOCUMENT (17 DECEMBER 2024 16:19:13)

UNCONTROLLED DOCUMENT

UNCONTROLLED DOCUMENT

UNCONTROLLED DOCUMENT

3.4.7.9 Dispatch Aircraft





Perform a standard military salute with right hand and/or wand to dispatch the aircraft. Maintain eye contact with the flight crew until the aircraft has begun to taxi.

3.4.7.10 Fire



Holding right arm straight, move right hand in an exaggerated figure eight (8), or a fanning type motion, from the shoulder to the knee, while at the same time pointing with the left-hand wand to the area of the fire.

At night, use same process with wands.

UNCONTROLLED DOCUMENT (17 DECEMBER 2024 16:19:13)

UNCONTROLLED DOCUMENT

UNCONTROLLED DOCUMENT

UNCONTROLLED DOCUMENT

3.4.7.11 Set Brakes



Raise right hand just above shoulder height with open palm facing forward. Ensuring eye contact with flight crew, close hand into a fist. DO NOT move until receipt of thumbs up acknowledgement from flight crew.

3.4.7.12 Release Brakes



Raise hand just above shoulder height with hand closed in a fist. Ensuring eye contact with flight crew, open palm facing forward. DO NOT move until receipt of thumbs up acknowledgement from flight crew.

3.4.7.13 Chocks Inserted



With arms and wands fully extended above head, move wands inward in a jabbing motion until wands touch. Ensure acknowledgement is received from flight crew.

UNCONTROLLED DOCUMENT (17 DECEMBER 2024 16:19:13)

UNCONTROLLED DOCUMENT

3.4.7.14 Chocks Removed



With arms and wands fully extended above head, move wands outward in a jabbing motion. **DO NOT** remove chocks until authorized to do so by flight crew.

3.4.7.15 Start Engines

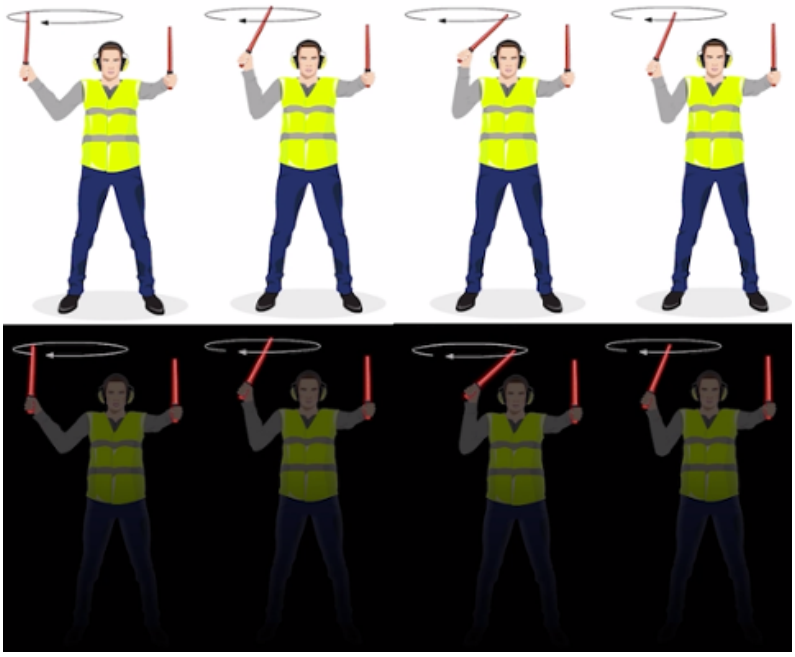

Raise right arm to head level with wand pointing up and make a circular motion with hand; at the same time, with the left arm raised above head level, point to engine to be started.

UNCONTROLLED DOCUMENT

UNCONTROLLED DOCUMENT

UNCONTROLLED DOCUMENT (17 DECEMBER 2024 16:19:13)

UNCONTROLLED DOCUMENT

3.4.7.16 Emergency Engine Shut Down/Cut Engines



Extend right arm with wand forward of body at shoulder level, move hand and wand to top of left shoulder and draw wand to top of right shoulder in a slicing motion across throat. Hold left arm above head with closed fist.

UNCONTROLLED DOCUMENT

UNCONTROLLED DOCUMENT

UNCONTROLLED DOCUMENT (17 DECEMBER 2024 16:19:13)

UNCONTROLLED DOCUMENT

3.4.8 Technical/Servicing Hand Signals–Ground Staff to Flight Crew

3.4.8.1 Connect Tow Bar



Bring arms above head and grasp forearm with opposite hand.

3.4.8.2 Air Up



Wave arms up and down from thigh to waist with palms up.

Meaning: Supply pressurized air for engine start.

UNCONTROLLED DOCUMENT

UNCONTROLLED DOCUMENT

UNCONTROLLED DOCUMENT (17 DECEMBER 2024 16:19:13)

UNCONTROLLED DOCUMENT

3.4.8.3 Connect/Disconnect Ground Power



To connect ground power:

Hold arms fully extended above head; open left hand horizontally and move fingertips of right hand up to touch open palm of left hand (forming a “T”). At night, illuminated wands can also be used to form the “T” above the head.



To disconnect ground power:

Hold arms fully extended above head with fingertips of right hand touching open horizontal palm of left hand (forming a “T”) and lower right hand away from the left. DO NOT disconnect power until authorized by the flight crew. At night, illuminated wands can also be used to open the “T” above the head.

3.4.8.4 Affirmative/All Clear



Raise right arm to head level with wand pointing up or display right hand with thumbs up; left arm remains at side by knee.

UNCONTROLLED DOCUMENT (17 DECEMBER 2024 16:19:13)

UNCONTROLLED DOCUMENT

3.4.8.5 Negative



Hold right arm straight out at 90° from shoulder and point wand down to ground or display right hand with thumbs down; left hand remains at side by knee.

3.4.8.6 Interphone



Extend both arms at 90° from body and move hands to cup both ears.

3.4.8.7 Do not Touch Controls



Raise right hand above head level and close fist or hold wand in horizontal position; left arm remains at side by knee.

UNCONTROLLED DOCUMENT

UNCONTROLLED DOCUMENT

UNCONTROLLED DOCUMENT (17 DECEMBER 2024 16:19:14)

UNCONTROLLED DOCUMENT

3.4.8.8 Open/Close Stairs



With right arm at side and left arm raised above head at a 45° angle, move right arm in sweeping motion toward top of left shoulder.

Note: This signal is intended mainly for aircraft with a set of integral stairs at the front.

UNCONTROLLED DOCUMENT

UNCONTROLLED DOCUMENT

UNCONTROLLED DOCUMENT (17 DECEMBER 2024 16:19:14)

UNCONTROLLED DOCUMENT

3.4.9 Technical/Servicing Hand Signals–Flight Crew to Ground Staff

3.4.9.1 Brakes Engaged



Raised arm and hand with palm facing forward and fingers extended in front of face and close hand into a fist.

3.4.9.2 Brakes Released



Raised arm with fist clenched in front of face; extend fingers to open palm facing forward.

3.4.9.3 Insert Wheel Chocks

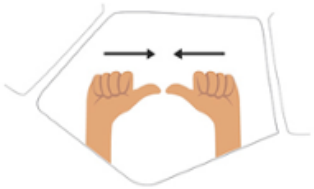

Hands held in front of face, palms facing forward with fingers closed and thumbs extended; move hands inward.

UNCONTROLLED DOCUMENT

UNCONTROLLED DOCUMENT

UNCONTROLLED DOCUMENT (17 DECEMBER 2024 16:19:14)

UNCONTROLLED DOCUMENT

3.4.9.4 Remove Wheel Chocks

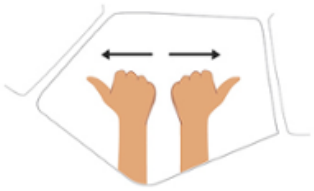

Hands held in front of face, palms facing backward with fingers closed and thumbs extended; move hands outward.

3.4.9.5 Ready to Start Engine(s)



One hand raised with the appropriate number of fingers outstretched to indicate the number of the engine to be started.

3.4.9.6 All Clear



One hand raised with closed fingers and thumb extended. Acknowledgement of all ground actions.

UNCONTROLLED DOCUMENT

UNCONTROLLED DOCUMENT

UNCONTROLLED DOCUMENT (17 DECEMBER 2024 16:19:14)

UNCONTROLLED DOCUMENT

UNCONTROLLED DOCUMENT

UNCONTROLLED DOCUMENT

3.5 Toilet Servicing

3.5.1 Introduction

The complete procedure for servicing the aircraft toilet waste tank(s) consists of the following three steps:

a. Draining the waste tank(s)
b. Flushing of waste tank(s)
c. Adding an amount of pre-charge and/or concentrated deodorant pre-charge product, as applicable



1. Toilet fluids are corrosive.
2. Prior to servicing, inspect the toilet servicing panel on the aircraft for signs of leakage.
3. If any horizontal blue streaks are observed, the blue streak shall be cleaned prior to servicing.
4. After cleaning, look again for signs of leakage.
5. Blue ice build-up at higher altitudes may influence airworthiness. In the case of a possible leak, immediately inform the airline representative, ground engineer, or advise the flight crew.

3.5.2 Hygiene Precautions

a. Wear heavy rubber gloves, full face protection and protective clothing against harmful wastes when performing toilet servicing.
b. Do not park the toilet service unit within 30m of the water service unit or at the water filling point.



Once an agent has performed toilet servicing on an aircraft, the same agent cannot perform water servicing during the same task.

3.5.3 Toilet Servicing Procedure

3.5.3.1 General

Each aircraft type has specific requirements for toilet servicing and the amount of pre-charge and/or concentrated deodorant pre-charge product. Refer to the operating airline for specific instructions per aircraft type.

a. Prior to opening a toilet service panel, check for stains around the panel.
b. While opening the service panel, stay clear and watch for signs of leakage.
c. Stay clear of the drain fitting cap while opening and watch for signs of leakage.
d. Ensure the drain hose Y-fitting coupling is connected correctly before the drain valve handle is pulled.
e. Empty the waste tank(s).
f. Flush the waste tank(s) in accordance with operator airline procedures.
g. Pre-charge the tank(s) with the correct quantity of water and disinfectant, as applicable.
h. Fill the waste tank(s) with the correct amount of water and concentrated deodorant pre-charge product or premixed fluid, as applicable. For aircraft equipped with a conventional toilet system, fill the waste tank(s) with the correct amount of water and pre-charge or concentrated deodorant pre-charge.
i. After servicing, ensure there are no leaks at the drain fitting cap or the end of the drain hose Y-fitting coupling.
j. Close the nozzle tightly to prevent the accumulation of ice during flight and wipe off residual water and disinfectant.
k. Check for possible leakage.
l. After servicing, close and latch the fitting caps and service panel door.

UNCONTROLLED DOCUMENT (17 DECEMBER 2024 16:19:14)

UNCONTROLLED DOCUMENT

Notes:

1. Inform aircraft maintenance or flight crew, if:
    i. Fluid leakage is observed.
    ii. The drain valve will not open, or the waste tank cannot be drained.
2. Report any spillage of waste to the supervisor.

3.5.3.2 Draining

a. Drain the aircraft waste system into the waste tank of a toilet service unit.
b. Observe the waste drain hose during draining to confirm that the waste tank is completely emptied. The hose will vibrate for a few seconds as the contents of the waste tank pass into the waste tank of a toilet service unit.

Note: Drain the waste tanks one at a time for optimal results.

3.5.3.3 Servicing During Freezing Conditions

Take the following measures to prevent freezing of the fluid in the aircraft toilet tanks and lines during freezing conditions:

a. Drain the waste tanks if the aircraft is parked in the open for several hours without electrical power supply and the temperature is, or is expected to be, below the freezing point, as per operating airline procedures.
b. Fill the aircraft toilet system only after electrical power supply has been restored, and as close to flight departure time as possible.
c. Ensure the fill line is fully drained before closing the cap to prevent freezing of fluid in the fill line.



Do not attempt to remove the frozen substance from the fill lines, connections or service panels. Contact maintenance immediately.

3.5.3.4 Inoperative Toilet Systems

If defects in the toilet system prevent regular servicing, ask qualified technical staff, if available, for assistance (e.g., removal of panels).

If no technical staff are available, inform the flight crew or an airline representative.

UNCONTROLLED DOCUMENT

UNCONTROLLED DOCUMENT

UNCONTROLLED DOCUMENT (17 DECEMBER 2024 16:19:14)

UNCONTROLLED DOCUMENT

3.6 Potable Water Servicing

3.6.1 General

a. The water used for uplift shall fully meet the hygiene and testing requirements detailed in AHM 440 7.5, 8.11.1 and 9.1 and those detailed in **3.6.3 - Potable Water Hygiene Requirements**.
b. Equipment used shall fully comply with the specifications detailed in AHM 970 for water servicing vehicles or AHM 981 for towed service carts.
c. All equipment shall be serviced according to the manufacturer's recommendations. Records shall be kept of all servicing, cleaning, disinfection and maintenance tasks performed.
d. All equipment and facilities used shall be maintained to the highest possible hygienic standards.
e. Only uplift water to aircraft if authorized or requested by the operating airline.
f. Replenish the aircraft tank according to operating airline procedures. Any deviation shall be reported to the supervisor or airline representative.
g. Airline representatives shall be informed of any issue that may affect (or may have affected) the standard of water uplifted to their aircraft, including contamination incidents, maintenance findings and test failures.

3.6.2 Potable Water Servicing Procedures

3.6.2.1 Filling Aircraft Water Tanks

a. Before connecting the aircraft filling hose to the aircraft, flush the hose.

   Note: The hose needs to be flushed into a bucket or waste container before connecting the hose to the aircraft filling port (not required on consecutive servicing).

b. Do not place hose ends on the ground.
c. On immediate turnaround sequence, water service shall always be performed before toilet service. Certain aircraft types are exempted from this rule. For exceptions, refer to the operating airline's requirements.
d. The aircraft filling port shall be cleaned/wiped dry with antiseptic wipes before the hose is connected to the aircraft adaptor.

   Note: Cleaning may be carried out either by wiping with a towelette or equivalent soaked with a disinfecting solution or wiping with presoaked disinfectant towelettes. The spray-and-wipe procedure is accepted if sprayed directly on the towelette. However, staff should not spray directly into the aircraft coupling.

e. Fill the water tank(s) to the required level.
f. Each aircraft type has specific requirements for filling and draining. Refer to the operating airline's requirements for specific servicing instructions.
g. When not in use, hose ends shall be:
   1. Kept capped, or
   2. Attached to a dummy connector, or
   3. Kept in a container filled with disinfectant solution, or
   4. Treated with disinfectant before use.

UNCONTROLLED DOCUMENT
UNCONTROLLED DOCUMENT

UNCONTROLLED DOCUMENT (17 DECEMBER 2024 16:19:14)

UNCONTROLLED DOCUMENT

3.6.2.2 Water Servicing During Freezing Conditions

The following actions shall be followed to prevent water freezing in the aircraft water tanks and lines during freezing conditions:

a. Drain the aircraft water tanks if instructed by the operating airline, as per operating airline procedures. Dispose of the water in accordance with airport operator requirements.
b. Ensure the fill line is fully drained before closing the cap to prevent freezing of fluid inside.



Keep aircraft cargo access doors closed to prevent water lines from freezing when the cargo compartments are not being loaded or unloaded.
Do not attempt to remove the frozen substance from the fill lines, connections or service panels. Contact maintenance immediately.

3.6.3 Potable Water Hygiene Requirements

3.6.3.1 Fill Points and Water Cabinets

a. Fill Points and water cabinets shall be inspected regularly to ensure they are adequately maintained. Dates of last/next inspections of the fill point shall be labelled on the outside panel of the enclosure door. The inspections shall include the following tasks per these frequencies:
    1. Daily
        i. Cleanliness: complete a visual check of the fill point and its area, and remove any contamination and litter.
        ii. Coupling damaged/available/correct connected
        iii. Treatment devices shall be functional
        iv. Hoses, if any, should be completely flushed
        v. Appearance/smell of the potable water shall be checked: for the water to be acceptable it shall be of appropriate colour, visually clear, bright and free from solid matter and noticeable odour.
        vi. If chlorine is used for the disinfection of potable water, conduct a Free chlorine/residual chemical test: The result of the free chlorine test shall be within 0.3 and 0.8 mg/l.
    2. Weekly
        i. Disinfection: Disinfection shall only be done using products or treatment methods approved by the local health authority. The treatment method and, if applicable, additive used shall be recorded.
    3. Monthly
        i. Cleaning and Disinfection: Cabinets shall be chemically cleaned internally to remove any scale or deposits.
b. Hoses, connectors and water quality shall meet AHM 440 specifications and hygiene requirements.
c. The water shall only be used as potable water for aircraft.
d. The area around the fill point/water cabinet shall be kept clean and free from waste.
e. When not in use, all fill point hoses shall be secured and locked in a metal pest-proof enclosure. Fill points without attached hoses shall be capped.

UNCONTROLLED DOCUMENT (17 DECEMBER 2024 16:19:14)

UNCONTROLLED DOCUMENT

f. When not in use, hose-ends shall be:
    1. Kept capped, or
    2. Attached to a dummy connector, or
    3. Kept in a container filled with disinfectant solution, or
    4. Treated with disinfectant before use.

g. Do not place hose ends on the ground.

3.6.3.2 Water Service Vehicles and Towed Service Carts

The water service vehicles and towed service carts shall:

a. Conduct and record daily, weekly and monthly tasks as per AHM 440 8.11.1.
b. Only be filled at a designated potable water fill point using approved hoses and couplings.
c. Only be used to fill aircraft potable water tanks.
d. Be parked in a clean and secure area, away from toilet servicing vehicles.
e. Not be positioned close to toilet servicing units at any time, particularly when toilet servicing or toilet waste disposal is taking place.

Notes:

1. The water service vehicles and towed service carts should be parked in a shaded area during hot sunny weather, particularly if filled.
2. The tank shall be drained completely at least once per calendar day. When draining the tank, ensure no stagnant water remains in the tank.

3.6.3.3 Water Servicing Staff

The water servicing staff shall:

a. Be dressed in clean working clothes in accordance with the World Health Organization (WHO) Drinking Water Quality Standard to be assigned to drinking water servicing.
b. For hygiene reasons, if operators conduct both toilet and water servicing functions during the course of their shift, the operators must service potable water before servicing aircraft toilets.



Should the operator be reassigned to perform water servicing after he/she has performed toilet servicing, the operator shall shower and change into clean external clothes/overalls and PPE.

c. The operator should wear single use or disposable gloves during drinking water servicing.

3.6.3.4 Water Treatment Chemicals (Sanitizer)

Water uplifted to aircraft potable water tanks shall contain a low concentration of disinfectant chemical (sanitizer) of a type suitable for potable water. The most common sanitizers are based on chlorine or hydrogen peroxide. If chlorine is used for the treatment of potable water, a Free chlorine/residual chemical test shall be conducted on the potable water. The result of the free chlorine test shall be within 0.3 and 0.8 mg/l.

UNCONTROLLED DOCUMENT (17 DECEMBER 2024 16:19:14)

UNCONTROLLED DOCUMENT

The potable water used shall be regularly monitored to ensure safe water quality is maintained. A sample shall be taken from water servicing units and the airport's potable water taps every 3 months and sent to a laboratory for testing of microbial parameters and physical-chemical parameters. The water analysis certificate with the parameter values, parameter limits, and name of the laboratory where the sample was analysed shall be displayed or available. Should an analysis fail, water servicing must be interrupted immediately and corrective action done accordingly. Water servicing shall be resumed after subsequent analysis has shown acceptable results for the involved parameters.

Samples shall be taken at:

- The transfer point to aircraft
- The transfer point to water truck
- The Transfer point after water treatment
- The handover point from public water supplier

When taking a sample of water:

a. Before water sampling, it is mandatory:
    1. To have clean hands
    2. To use only sterile sampling bottles provided by the laboratory or other approved sources
b. Disinfect/Sterilize:
    1. Using disinfecting/cleaning towelettes or cleaning paper soaked with bleach, clean and disinfect the water tap.
    2. Wipe your hands with disinfecting towelettes or equivalent.
c. Let the water run at low flow for a few seconds, then at medium flow during 2 to 3 minutes so as to flush the line and eliminate the disinfectant.
d. Use two sterile bottles (1 physical-chemical factors and 1 microbial analysis)
e. Present the bottle under the water tap and fill it without previous rinsing while letting a little quantity of air at the top.
f. Write on the bottle labels: date and time of sampling, airport, location of sampling (airport water network or water servicing vehicle), serviced a/c and airline if any.
g. Samples will be kept at 5°C in melting ice or equivalent in an isothermal container.
h. Until transportation is possible, keep the samples in a refrigerator.
i. The bottles will be sent together with the analysis report form (see annex).
j. Bring the samples as quick as possible to the laboratory. Analysis shall be done within 24 h after sampling.

UNCONTROLLED DOCUMENT (17 DECEMBER 2024 16:19:14)

UNCONTROLLED DOCUMENT

3.6.3.5 Water Service Vehicle Cleaning and Disinfection

Water service vehicles, towed service cart tanks and hoses shall be checked every day, disinfected at least once per week and deep cleaned at least once per month.

During daily checks, complete a visual check of the equipment, and remove any contamination. Any hoses shall be flushed. The appearance/smell of the tank shall be checked. If chlorine is used for the disinfection of potable water, conduct a Free chlorine/residual chemical test of the water in the tank: The result of the free chlorine test shall be within 0.3 and 0.8 mg/l.

The tank shall be disinfected weekly. Disinfection shall only be done using products or treatment methods approved by the local health authority. The treatment method and, if applicable, additive used shall be recorded. If a disinfection agent is used, this shall be done immediately after filling and the water shall be circulated within the servicing vehicle during a minimum time of 30 minutes in order to have a full dilution and to allow the disinfection agent to react.

The tank shall be deep cleaned monthly; it shall be chemically cleaned internally to remove any scale or deposits.

3.6.3.6 Fill Point and Water Cabinet Cleaning and Disinfection

a. Fill points, hose cabinets and their surroundings shall be checked daily for general cleanliness: complete a visual check of the fill point and its area, and remove any contamination and litter.
b. Fill points and hoses shall be disinfected at least once a week: Disinfection shall only be done using products or treatment methods approved by the local health authority. The treatment method and, if applicable, additive used shall be recorded.

UNCONTROLLED DOCUMENT

UNCONTROLLED DOCUMENT

UNCONTROLLED DOCUMENT (17 DECEMBER 2024 16:19:14)

UNCONTROLLED DOCUMENT

3.7 Aircraft Cleaning and Disinfection

3.7.1 General

a. Aircraft Cleaning

The removal of visible dirt and/or particles through mechanical action, normally undertaken on a routine and frequent basis. Cleaning and disinfection can be combined into one process if disinfectants are used during the cleaning.

b. Disinfection/Sanitization/Sanitation

The procedure whereby measures are taken to control or kill infectious agents on a human or animal body, on a surface, on goods or in/on baggage, cargo, containers, and/or conveyances by direct exposure to chemical or physical agents.

c. Event

An occurrence of suspected or confirmed communicable disease on board an aircraft, or aircraft contaminated with body fluids, or other nonstandard (uncommon) situation necessitating additional cleaning and disinfection.

3.7.2 Aircraft Cleaning Intervals

a. Turnaround Cleaning

Performed on aircraft while on the ground prior to departure within a defined ground time.

b. Transit Cleaning

Type of turnaround cleaning that may be performed with transit passengers on board.

c. Layover/Night-Stop Cleaning

Performed when the aircraft is on a longer predefined ground time. The cleaning does not involve removal of cabin panels and/or gallery inserts.

d. In-flight Cleaning

Performed by cabin crew while the aircraft is airborne.

e. Deep Cleaning

Performed when the aircraft is on a longer predefined ground time. The cleaning may include the removal of cabin panels and/or galley inserts. Includes cleaning performed during maintenance.

Note: Cleaning done during aircraft maintenance is not addressed within the scope of this section.

UNCONTROLLED DOCUMENT

UNCONTROLLED DOCUMENT

UNCONTROLLED DOCUMENT (17 DECEMBER 2024 16:19:14)

UNCONTROLLED DOCUMENT

3.7.3 Cleaning and Disinfection Products

3.7.3.1 General

It is the airline's responsibility to ensure cleaning procedures as well as cleaning and disinfecting products used by the ground handling or cleaning company are airline approved and based on the aircraft's OEM recommendations. This includes following local health organization recommendations and using proper PPE.

Informed selection and correct use of products is vital to ensure effective cleaning and disinfection of an aircraft without damaging the aircraft interior, systems and/or equipment while minimizing the likelihood of transmission of any communicable diseases.

3.7.3.2 Product Selection

a. Refer to OEM guidance for the most recent recommendations.
b. Refer to local health authorities for recommendations on products effective against a contagious disease outbreak or pandemic.
c. The ICAO Council Aviation Recovery Taskforce (CART) Takeoff Guidance recommends the use of a 70% isopropyl alcohol (IPA) solution as a disinfectant for the touch surfaces in the cockpit, cabin and cargo holds. Cleaning and disinfection products should comply with and be certified according to OEM standards and/or industry test standards, such as SAE International standards:
    1. AMS1452C, Disinfectant, Aircraft, General Purpose (concentrated liquid)
    2. AMS1453A Disinfectant Cleaner for Aircraft Interior General Purpose Liquid (diluted)
    3. AMS1525D Cleaner for Aircraft Exterior Metallic Surfaces, Wipe Solvent, Cold Operations
    4. AMS1526C Cleaner for Aircraft Exterior Surfaces, Water-Miscible, Pressure-Spraying Type

    Note: These standards might need to be approved by local authorities, if applicable.

d. Consultation with OEMs before using any disinfection agents that do not comply with SAE standards is required.
e. Refer to the cleaning and disinfection product manufacturer's instructions to ensure the proper application, ventilation and PPE is used.

UNCONTROLLED DOCUMENT

UNCONTROLLED DOCUMENT

UNCONTROLLED DOCUMENT (17 DECEMBER 2024 16:19:14)

UNCONTROLLED DOCUMENT

UNCONTROLLED DOCUMENT

UNCONTROLLED DOCUMENT

3.7.3.3 Product Use

The following recommendations are based on OEM guidelines:

a. It is important that the cleaning and disinfection liquids are used exclusively according to the product specifications and manufacturer safety data sheet (SDS).
b. Use premixed cleaning and disinfection liquids where possible to avoid mixing ratio errors.
c. Special attention must be paid to the application instructions and mixing ratios (e.g., wipe on, wipe off, water rinsing, drying after cleaning).
d. Use only the allowed bottle sizes on board to minimize the risk of spilling the cleaning and disinfection solutions.
e. Do not spray cleaning and disinfection liquids in the cargo compartment. Instead, apply as per the product and/or airline application instructions (e.g., wet wipe on/off).
f. Do not allow cleaning and disinfection liquids to contact critical equipment (e.g., smoke detector, electronic door operation equipment and fire extinguishing discharge nozzle).
g. Disinfectants are flammable. Take precautions around potential sources of ignition, especially hidden sources such as electronic boxes mounted in the cargo compartment.
h. Airlines should periodically inspect the aircraft interior and cargo holds to ensure there are no long-term effects or damage over time due to frequent use of cleaning and disinfection products. If damage is observed, contact the OEM.



1. Use of noncertified cleaning and disinfection liquids can lead to severe damage to material in the aircraft's interior.
2. Use of cleaning and disinfection liquids in the wrong mixing ratio or using the wrong application method can lead to severe damage to material in the aircraft's interior.
3. Cleaning and disinfectant solutions tend to be oxidizers. The interior of an aircraft contains many materials susceptible to damage from oxidization. Care must be exercised when using cleaning products and disinfectants.
4. Metals used in aircraft construction may corrode upon exposure to cleaning and disinfection products.
5. Safety-critical cables and wires may deteriorate upon exposure and aircraft furnishings may have their fire resistant properties reduced.
6. Some cleaning and disinfection products, such as IPA, are flammable. Care must be exercised in the aircraft interior, especially near various electric installations and boxes as these are sources of ignition.

UNCONTROLLED DOCUMENT (17 DECEMBER 2024 16:19:14)

UNCONTROLLED DOCUMENT

3.7.3.4 Cleaning Equipment

a. Vacuum Cleaners

Aircraft-powered or battery-powered vacuum cleaners can be used for carpets, air vents, seat arm storage, seat rails, behind-the-seat storage, etc. Manual (nonelectric) carpet sweepers are not an adequate substitute but may be necessary when time is limited, or a large number of passengers remain on board.



Do not unplug a vacuum cleaner by pulling on the cord. Pull from the plug.

b. Hand Brushes

For use in areas inaccessible to vacuum cleaners.

c. Chewing Gum Remover

To remove chewing gum.

d. Mops and Brooms

For cleaning floors and other hard surfaces. Must be clearly identified or color coded for toilet cleaning and general cleaning to avoid cross-contamination (e.g., red/blue for lavatories, yellow for galleys, green for cabin). They shall be separated at all times, including during cleaning activities.

e. Towels and Cloths

There are different types according to airline requirements for general purpose cleaning and polishing. Must be clearly identified or color coded for toilet cleaning and general cleaning (top-down approach). They shall be separated at all times, including during cleaning activities.

f. Absorbent Wipes

For mopping up spillages.

g. Hand Sprayers

For dispensing detergents and disinfectants.

h. Runners

For floor and/or carpet protection.

i. Soft Rolls and Wipes

For wiping up spillages.

j. Buckets

Need to be checked to ensure the cleaning liquid is being replaced regularly.

UNCONTROLLED DOCUMENT

UNCONTROLLED DOCUMENT

UNCONTROLLED DOCUMENT (17 DECEMBER 2024 16:19:14)

UNCONTROLLED DOCUMENT

3.7.4 Cleaning and Disinfection Tasks

3.7.4.1 General

The following cleaning and disinfection tasks serve as a guideline on how to provide a safe and sanitary operating environment for passengers, crew and cleaning staff.

The tasks, as defined in the following tables, provide a framework for airlines. It is the responsibility of each airline, as per their specific assessments and needs to:

a. Establish which tasks they deem necessary to be completed during an aircraft cleaning interval.
b. Adhere to airline specifications regarding cleaning and disinfection tasks.
c. During a pandemic, it is essential that airlines perform a risk assessment based on the regulatory requirements, airport cleaning plan, and OEM recommendations to develop mitigation plans, including amending their existing cleaning and disinfection procedures.
d. Review and update their cleaning matrices based on specific configurations of their aircraft types.
e. For cargo aircraft, clean and disinfect cabin, seating and crew rest areas in the same way as instructed in **3.7.4.5 - Lavatories** and **3.7.4.6 - Passenger Seating Area**.
f. Monitor high-contact surface areas in aircraft as much as possible; include such areas in the cleaning checklist.
g. Ensure the cleaning and disinfection products are used in the correct mixing ratio according to the application instructions and/or product SDS.
h. Ensure the correct mixing ratio is used for relevant areas as per the SDS. There might be a different mixing ratio for the same product for different areas (e.g., 1:10 for cleaning in cabin surroundings and 1:5 for lavatories and galleys).
i. Ensure the correct application method is used according to the application instructions and/or product SDS (e.g., apply with premoistened wipes or single use wetted cloths).
j. To avoid contamination on board, cleaning staff shall carry their own cleaning equipment to avoid unnecessary exchanges of cleaning items between different teams or persons.



1. If spraying methods are used, do not spray directly into power supply panels, lighting, vents, interphone, coffeemakers or other electrical systems. Disinfectant should only be applied using a cloth in these areas.
2. Immediately inform an airline representative if any of these areas are accidentally sprayed.
3. Ensure cleaning and disinfection products are wiped off after application using a slightly moist towel, if required by the SDS. Residues of cleaning and disinfection products left on surfaces (e.g., tables) may lead to severe discoloration and permanent damage of the cabin interior.
4. Ensure a suitable cloth is used for aircraft cabin cleaning.

UNCONTROLLED DOCUMENT (17 DECEMBER 2024 16:19:14)

UNCONTROLLED DOCUMENT

3.7.4.2 Flight Deck

Tasks	Turn around	Layover
Clean and disinfect the pilot and copilot seats, including armrests, table and seat controls.	☐	☐
Clean and disinfect seat belt buckles.	☐	☐
Clean and disinfect flight controls (e.g., control column).*	☐	☐
Clean and disinfect the sidewall lining and associated controls (e.g., nose wheel steering tiller, display controls, electronic flight bag).*	☐	☐
Clean and disinfect the instrument panel and associated controls (e.g., gear lever).*	☐	☐
Clean and disinfect the glareshield and associated controls (e.g., autopilot, warning/caution buttons).*	☐	☐
Clean and disinfect the sun visors and surrounding area.*	☐	☐
Clean and disinfect the overhead panel, including grips and handles.*	☐	☐
Clean and disinfect the central console, including engine controls, flaps, communication units, etc.*	☐	☐
Clean and disinfect the pilot and copilot headsets.*	☐	☐
Clean the inside of the windshield with the designated product.*	☐	☐
Clean and disinfect the cabin access door (both sides), handle and lock.	☐	☐
Extend, clean and disinfect the folding seats/jump seats and any associated equipment.	☐	☐
Clean down pedals.*	☐	☐
Clean floor, vacuum carpet, empty waste boxes, wipe shelves.	☐	☐
⚠	**Caution:** a. Frequency of cleaning of the flight deck should account for both separation of the flight deck from the passenger compartment and frequency of crew transitions. b. Adhere to airline-specific procedures regarding cleaning the flight deck (e.g., the cleaning crew may only be permitted to enter the flight deck when flight crew or maintenance personnel is present). c. Cleaning and disinfection fluids for the flight deck can be different from fluids used in the cabin. d. Do not spray disinfectant directly onto panels and screens; it should be applied with cloth. e. Ensure liquid does not seep into controls. f. Any accidental adjustment of important instruments during the cleaning process must be reported to the flight crew or maintenance personnel. g. Buckets shall not be brought into the cockpit.	
Note: *Cleaning and disinfecting of areas designated with an asterisk (*) above shall be done by personnel specifically trained for flight deck cleaning.*		

3.7.4.3 Galleys

Tasks	Turn around	Layover
Clean and disinfect worktops, countertops and service table.	☐	☐
Clean ovens.	☐	☐
Clean coffeemakers.	☐	☐
Clean water boilers.	☐	☐
Clean and disinfect panels and doors.	☐	☐
Clean and disinfect switcher panels and handles.	☐	☐
Empty and clean waste compactors; add waste sac/box, if needed.	☐	☐
Clean and disinfect lockers/drawers.	☐	☐
Clean and disinfect trolley containers and storage.	☐	☐
Clean and disinfect collapsible trolleys.	☐	☐
Drain and disinfect sinks, including taps and drain plug.	☐	☐
Remove trash from bin compartments and clean/disinfect bin area, including flap.	☐	☐
Sweep, mop and disinfect floor.	☐	☐
⚠	**Caution:** Clean ovens and aluminum surfaces with detergents as per recommended standards.	

3.7.4.4 Cabin Crew Seats and Service/Entry Door Lining Panels

Tasks	Turn around	Layover
Clean and disinfect each attendant seat, seat belt and surrounding location.	☐	☐
Clean and disinfect cabin crew intercom.	☐	☐
Empty and clean seat pockets.	☐	☐
Inspect emergency leaflets for damage and clean, disinfect or replace.	☐	☐
Arrange or remove and replace literature and amenities.	☐	☐
Clean and disinfect seat upholstery and remove any evident stains.	☐	☐
Clean and disinfect door frames, including door panels, sills, exit doors and emergency slide covers.	☐	☐

UNCONTROLLED DOCUMENT (17 DECEMBER 2024 16:19:14)

UNCONTROLLED DOCUMENT

3.7.4.5 Lavatories

Tasks	Turn around	Layover
Clean mirrors and windows, if applicable, using authorized glass cleaners.	☐	☐
Ensure all soap dispensers are functional and refilled with liquid soap.	☐	☐
Clean and disinfect soap dispensers.	☐	☐
Clean and disinfect hand basin, handles and steel fittings.	☐	☐
Clean and disinfect sidewall panels and ceiling.	☐	☐
Clean and disinfect shelves.	☐	☐
Clean and disinfect diaper changing table, if available.	☐	☐
Clean and disinfect toilet bowl, shroud, seat and flushing mechanism (lever or button).	☐	☐
Empty waste bin(s) and replace waste bag, if applicable. Clean and disinfect compartment, including flap, before reinstalling bin(s).	☐	☐
Clean and disinfect floor.	☐	☐
Ensure toilet compartment is dressed and stocked with amenities required for flight.	☐	☐
Clean and disinfect lavatory door (both sides), including the door lock, knob/lever, grip, door grilles and coat hook(s), if applicable.	☐	☐
⚠	**Caution:** a. Immediately wipe off any cleaning/disinfectant liquid spills on the surfaces to prevent damage or deterioration. b. Toilet cleaning shall be performed from top to bottom for hygienic reasons. c. Use only towels identified specifically for toilet cleaning. d. Do not reuse mops and towels used for toilet cleaning outside of lavatories.	

3.7.4.6 Passenger Seating Area

Passengers are not carried on board DHL flights.

3.7.4.7 Crew Rest Compartments

Tasks	Turn around	Layover
Dispose of waste from closets and waste bins.	☐	☐
Clean and disinfect intercom and control consoles (e.g., reading lights and air nozzles).	☐	☐
Clean and disinfect ceiling and light switches.	☐	☐
Clean and disinfect beds and belts. Replace blankets and pillow covers, if applicable. Ensure enough bedding is provided for the number of crew operating.	☐	☐
Clean floor and cabin stairs, if applicable, and vacuum carpet.	☐	☐

3.7.4.8 Cargo Hold

Tasks	Turn around	Layover
Clean and disinfect cargo door surroundings and door handles for all lower deck cargo holds (FWD, AFT and Bulk), in addition to main deck cargo access door for cargo aircraft.	☐	☐
Clean and disinfect cargo loading system panels, including cargo joystick in ceiling and latches, if applicable.	☐	☐
Clean and disinfect all access panels and service access points, including cargo door control panels.	☐	☐
Clean and disinfect door net stanchions, net attachment fittings and tie-down points, if applicable, in bulk compartment.	☐	☐
Clean and disinfect light switches.	☐	☐
Clean and disinfect high touch areas in upper deck, if applicable (e.g., B747 cargo aircraft) and main deck (all cargo aircraft).	☐	☐
⚠	**Caution:** a. When cleaning and disinfecting the complete cargo hold, refer to OEM guidance for further clarification of appropriate techniques to be used. b. Any aircraft where personnel have to work inside the compartment to manually load/unload, cleaning of floor areas should be considered (e.g., bulk loaded cargo holds).	

UNCONTROLLED DOCUMENT (17 DECEMBER 2024 16:19:14)

UNCONTROLLED DOCUMENT

3.7.5 Aircraft Cleaning and Disinfection During a Pandemic

3.7.5.1 General

During a pandemic, all existing cleaning best practices are, in principal, still applicable. However, they need to be revised and amended based on the regulatory requirements, airport cleaning plan, and OEM recommendations to include new measures addressing the threat.

Based on a conducted risk assessment, each airline may implement different cleaning and disinfection schedules, techniques and products, which consider the operational circumstances and duration of the disinfecting effects of the substance(s) used.

3.7.5.2 Actions Prior to Cleaning

To minimize person-generated contaminant concentrations during ground and flight operations, OEMs recommend maximizing total cabin airflow; therefore, care should be taken to avoid blocking air vents (particularly along the floor).

The following are general recommendations for cabin air considerations and there may be exceptions for specific aircraft models. It is strongly recommended that operators consult with the aircraft OEM for questions specific to an aircraft type.

a. The aircraft auxiliary power unit (APU) should be permitted to be used at the gate/stand to enable the aircraft's air conditioning system to be operated if equivalent filtration from the external PCA is not available.
b. If the aircraft has an air recirculation system but does not have High-Efficiency Particulate Air (HEPA) filters installed, refer to OEM documents or contact the OEM to determine the recirculation system setting.
c. It is recommended that fresh air and recirculation systems be operated to exchange the volume of cabin air before cleaning crew enter the aircraft for cleaning purposes.
    1. For those aircraft with air conditioning, run the air conditioning packs (with bleed air provided by the APU or engines) or supply air via an external PCA source for at least 10 minutes prior to the boarding process, throughout boarding and during disembarkation.
    2. For aircraft with HEPA filters, run the recirculation system to maximize flow through the filters.
    3. For those aircraft without an air conditioning system, keep the aircraft doors open during the turnaround to facilitate cabin air exchange (passenger doors, service door and cargo access door), as much as practical.



Ensure access doors are only in the open position if there is an appropriate boarding device or other equipment positioned at the door.

Note: Ensure cleaning equipment and tools (e.g., vacuum cleaners, brushes, brooms) are clean and hygienic prior entering the aircraft cabin and between use.

UNCONTROLLED DOCUMENT (17 DECEMBER 2024 16:19:14)

UNCONTROLLED DOCUMENT

UNCONTROLLED DOCUMENT

UNCONTROLLED DOCUMENT

3.7.5.3 Actions During Cleaning and Disinfection

a. Once on board, ventilation systems should be kept running while cleaning takes place.

Note: In some cases, depending on the technique used for disinfection, regulators may recommend that the air conditioner be turned off during the disinfection operation and the passenger cabin fully ventilated after disinfection.

b. To avoid contamination on board, cleaning crew shall:
   1. Be assigned specific tasks, as much as possible.
   2. Use different cleaning materials in each task area (e.g., cloths, buckets, brushes, mops), potentially using color coded items.
   3. Carry their own cleaning items on board to avoid unnecessary exchange of cleaning items between different teams/persons.
   4. Use new disposable gloves in each area. Disposable gloves shall not be reused in other sections of the cabin.
   5. Follow the correct sequence of cleaning; for example, from top to bottom or front to back, as relevant (e.g., toilets, galleys, floors).

c. Use disinfection product(s) as per the recommendation in **3.7.3.3 - Product Use**.
d. Clean and disinfect all defined areas as specified in **3.7.4 - Cleaning and Disinfection Tasks** by using approved disinfection products as defined in **3.7.3.3 - Product Use** and appropriate cleaning materials/tools such as mopping, wiping, or any other approved methods.

3.7.5.4 Actions After Cleaning and Disinfection

After cleaning and disinfection, ensure cleaning crew disembark with all items for cleaning, including all waste, and that the following provisions are followed:

a. Disposal of waste must be done in accordance with local airport authority regulations.
b. Staff disembarking the aircraft with waste materials shall wear gloves to protect themselves and dispose of gloves after the disposal process.
c. Keep passenger stairs unobstructed by waste bags.
d. Do not throw waste bags onto the ramp from the aircraft or stairs.
e. If any amenities are to be loaded prior to departure, ensure this is done and indicated in the handover documentation.

3.7.5.5 Handover Procedures

When required, a handover protocol should be established, including a record to indicate that the aircraft has been cleaned and disinfected according to the ICAO aircraft disinfection sheet or operating airline procedures.

Notes: *For lost, found, damaged or suspicious items:*

1. *Do not check/open any items found as the nature of the contents is unknown and has the potential of being harmful/dangerous.*
2. *Any lost property found must be handed in according to operating airline procedures.*
3. *Any seat or cabin interior/area found damaged must be reported, as appropriate.*
4. *Any suspicious item found must be immediately reported as per operating airline procedures.*



Limit the number of staff moving into/out of a cleaned aircraft to maintain the sterile environment prior to boarding.

UNCONTROLLED DOCUMENT (17 DECEMBER 2024 16:19:14)

UNCONTROLLED DOCUMENT

3.7.6 Cleaning and Disinfection During an Event

3.7.6.1 Suspected or Confirmed Case of Communicable Disease on Board

The following are guidelines for cleaning crew who have to clean an arriving aircraft with a suspected case of communicable disease. During an outbreak of a specific communicable disease, the WHO or the national health authorities may modify or add further procedures to these guidelines.

a. Wear PPE as recommended by the national public health authority.

Note: PPE requires appropriate training before use.

b. Remove and discard gloves after cleaning or if they become soiled or damaged.
c. Use only cleaning agents and disinfectants at recommended concentrations and contact times that have been approved by OEMs.
d. Begin cleaning at the top (light and air controls) and proceed downward progressively working from clean to dirty areas.
    1. Surfaces to be cleaned include:
        i. Affected seat
        ii. Adjacent seats in the same row
        iii. Back of seats in the row in front
        iv. Light and air controls
        v. Adjacent walls and windows
        vi. Seatbacks (the plastic and/or metal part)
        vii. IFE video monitor
        viii. Tray tables
        ix. Armrests
        x. Remove seat pocket contents and replace (safety briefing card can be cleaned with approved disinfectant)
    2. Clean lavatory(ies) used by the sick passenger, including:
        i. Door handle
        ii. Locking device
        iii. Faucet
        iv. Wash basin
        v. Adjacent walls
        vi. Counter
        vii. Toilet seat

Note: In exceptional circumstances, public health authorities may require additional cleaning.

e. Disinfection of upholstery, carpets, or storage compartments is only indicated when they have been soiled by body fluids. In such cases, use an absorption agent first, if required, clean any visible soil and disinfect before vacuuming to eliminate the risk of re-aerosolization.
f. Wash hands with soap and water immediately after PPE is removed. An alcohol-based hand sanitizer may be used as an alternative if the hands are not visibly soiled.
g. Dispose of soiled material and PPE in a biohazard bag, if available. If not, place in an intact plastic bag, seal it, and label it as biohazard.
h. Do not use compressed air. It might re-aerosolize infectious material.

UNCONTROLLED DOCUMENT

UNCONTROLLED DOCUMENT

UNCONTROLLED DOCUMENT (17 DECEMBER 2024 16:19:14)

UNCONTROLLED DOCUMENT

3.7.6.2 Aircraft Contaminated with Body Fluids

When contaminated with blood, respiratory secretions, vomit, excretions and other bodily liquid (contaminants), the aircraft cabin should be disinfected by ground cleaning crew or specially qualified staff after disembarkation.

The air conditioning unit (ACU) should be adjusted to ensure full ventilation is completed and then turned off.

Once the air ventilation is finished:

a. Wear disposable gloves and other PPE according to local instructions.
b. Absorb the contaminant(s) into a towel or apply absorbent powder and disinfectant to the contaminants evenly.

   Note: Absorbent and disinfectant used must have been tested and approved for the interior material being cleaned.

c. Place the used towel and gloves in a biohazard or other waste bag. When using absorbent powder, remove the coagulated contaminants with portable pickup shovels and place into biohazard waste bags.
d. Clean and disinfect the contaminated area wearing new gloves. It is important to follow the application method and effective contact time as per the OEM SDS.
e. Remove gloves and clean/disinfect hands before removing other PPE in the following order:
   1. Take off protective suits (aprons) and gloves.
   2. For visibly soiled hands, wash with soap and water thoroughly.
   3. Take off goggles and facial mask/shield.
   4. Apply skin disinfection/hand sanitizer to clean hands and other parts of the body that may have been exposed to contaminants.
   5. Place all used PPE and contaminated items in a biohazard waste bag and seal the bag.
   6. Dispose of the biohazard as per local regulations.

   Note: When cleaning and disinfection was initially performed by cabin crew during flight, they should inform ground departments at destination to prepare for additional cleaning and/or disinfection, if need be, and disposal of biohazard.

UNCONTROLLED DOCUMENT

UNCONTROLLED DOCUMENT

UNCONTROLLED DOCUMENT (17 DECEMBER 2024 16:19:14)

UNCONTROLLED DOCUMENT

3.8 Safety During Aircraft De-icing/Anti-icing Operations

3.8.1 General

No aircraft shall attempt takeoff when frozen or freezing contamination is present on or adhering to the wings, propellers, control surfaces or other critical surfaces. This is known as the ICAO Clean Aircraft Concept. Compliance with this requirement can be achieved by appropriate use of anti-icing or de-icing procedures, or where necessary a combination of both.

Detailed procedures and requirements for de-icing and anti-icing can be found in SAE AS 6285 Aircraft Ground De-icing/Anti-Icing Processes and other relevant SAE documents. This section provides general guidelines for safe ground de-icing/anti-icing operations.

The term de-icing will be used throughout this section but should also be considered to refer to the anti-icing process.

De-icing operations shall be performed with extreme caution to prevent injury to staff and damage to aircraft and equipment. De-icing is not permitted during the fueling process.

3.8.2 Staff Safety

The safety factors given below are designed to ensure, in the performance of de-icing an aircraft, the safety of staff performing the task is not compromised.

a. Appropriate PPE should be checked for serviceability and worn by all staff engaged in de-icing operations.
b. Cones should be removed, as necessary, to allow access to the aircraft surfaces. Replace the cones on completion of the de-icing operation if the aircraft is not departing.
c. To prevent injury, caution must be taken when filling de-icing vehicles with hot fluid.
    1. When handling de-icing fluids, staff should understand and follow the precautions contained in the fluid OEM's SDS.
    2. Before de-icing operations start, de-icing should be coordinated between the de-icing and ground handling staff.
    3. De-icing/anti-icing fluids may be very hot; 60°C/140°F or even warmer. To prevent injuries, ground staff, passengers and flight crew shall be prevented from walking near an aircraft that is being de-iced.
    4. Slippery conditions can exist on the ground and equipment surfaces during and following the de-icing processes. Caution should be exercised, particularly in low humidity or nonprecipitating weather conditions, due to increased slipperiness following the use of glycol that is not diluted by the weather element.
    5. When de-icing on a stand, all ramp equipment, including passenger stairs, should be clear of the area to be sprayed to avoid contamination by fluid.
    6. Care should be taken to prevent the transfer of fluid by foot onto GSE (e.g., stairs), interiors of aircraft and aircraft cargo holds.

Note: Refer to **3.3.2 - Winter or Slippery Apron Conditions** for detailed safety precautions for ramp operations in winter conditions.

UNCONTROLLED DOCUMENT (17 DECEMBER 2024 16:19:14)

UNCONTROLLED DOCUMENT

3.8.3 Open Basket Operations

The following minimum precautions should be taken when de-icing from an open basket:

a. Ensure the fall restraint device is securely anchored and the safety harness is always worn.
b. Ensure the basket door or safety chain is securely latched.
c. Caution should be taken to avoid exposure to a running APU.

3.8.4 Closed Basket Operations

The following minimum precautions should be taken:

a. Ensure the seat belt is always worn.
b. Ensure the windows of the cabin are clean. Check wiper(s) for condition and check window washer fluid level.
c. Ensure the door of the cabin is securely closed.
d. Ensure there are no obstructions to the cabin heater/ventilation system.

UNCONTROLLED DOCUMENT

UNCONTROLLED DOCUMENT

UNCONTROLLED DOCUMENT (17 DECEMBER 2024 16:19:14)

UNCONTROLLED DOCUMENT

3.9 Catering and In-Flight Supplies

The operating airline shall be responsible for organizing any catering or in-flight supplies required for the Crew and supernumeraries in flight.

The catering and in-flight supplies provider shall ensure that all catering and in-flight supplies are security screened as per local airport security procedures prior to delivery to the aircraft.

Catering trucks with elevating equipment shall not be used to deliver catering to the aircraft in the DHL network.

When delivering catering and in-flight supplies to the aircraft, the following procedures apply:

a. Delivery vehicles shall be operated in accordance with the standards and procedures in **3.1.3.1 - General Safety Instructions**.
b. Delivery vehicles, when servicing an aircraft, shall be parked at the head of the aircraft stand outside the ERA or the Circle of Safety.
c. Catering and in-flight supplies and equipment when loaded on the aircraft shall be properly secured, tied down and any doors and shutters closed.
d. Any catering supplies seals shall be properly applied and any security documentation shall be completed, as require

UNCONTROLLED DOCUMENT

UNCONTROLLED DOCUMENT

UNCONTROLLED DOCUMENT (17 DECEMBER 2024 16:19:14)

UNCONTROLLED DOCUMENT

3.10 Aircraft Security

See Europe Regional Variation **2.1 - Aircraft Security**.

3.10.1 Prevention of Unauthorized Access

While security requirements vary from country to country, all staff working on the ramp, both DHL and handling agents, have a duty to ensure that no unauthorised persons have access to aircraft. Any unknown persons, persons not actively involved in the operation or anyone acting suspiciously must be challenged to determine their identity and purpose. Any persons without proper identification or acting in a suspicious manner must be reported to the locally designated security authorities immediately.

3.10.1.1 Prevention of Unauthorized Access to Departing Aircraft

Only Flight Crew and Supernumeraries with a valid jump seat ticket are authorised to be on board an aircraft in flight. Passengers are not carried on board DHL flights.

A supernumerary is a person in addition to the flight crew that is not classified as a passenger by the operator or the Authority. This can include, but is not limited to:

- A crew member, not part of the working flight crew, traveling to or from a duty assignment
- A DHL or operator employee travelling for auditing or other business purposes
- A Loadmaster
- A person with duties in respect of a particular shipment on board E.g. freight attendant, horse groom, etc.
- An authorized representative of an authority

3.10.2 Unattended Aircraft

As part of DHL's own security regime, all aircraft which are left unattended will have tamper evident seals applied to all entry points which do not require aircraft power to open and /or be placed under surveillance sufficient to detect unauthorised access.

- All aircraft doors shall be closed when not in use*
- Access stairs shall be withdrawn or retracted as appropriate
- All seals must be controlled by the local security responsible DHL or third party handling agent. Seals must be kept under secure conditions to prevent misuse
- The seal numbers used must be recorded, either in a log or on a database, by the local DHL entity or 3rd party handling agent to enable a number check to be carried out prior to entry to the aircraft
- If entry is made to a sealed aircraft prior to normal operations e.g. for maintenance, the aircraft must be released and the seal number recorded
- Seals can be obtained from Global Airside or your local Airside/Network department

*A period during which no entry or exit to the aircraft interior is required by personnel and/or handling units e.g. during a break in on/offload procedures. If all members of the loading team plan to leave the aircraft, but a member of crew or engineering remains on-board, all cargo doors shall be closed and the passenger doors shall be closed at the discretion of the crew/engineer.

UNCONTROLLED DOCUMENT (17 DECEMBER 2024 16:19:14)

UNCONTROLLED DOCUMENT

Infrequently used entry points (such as the R1 door) will be long term sealed; the corresponding reference numbers recorded or displayed in the foyer area. A check of these numbers will form part of the security check before flight.

3.10.3 Elevated Security

In periods of elevated security threat all aircraft will guarded or secured in accordance with local regulations.

3.10.4 Aircraft Security Search

As part of DHL's own security regime, an aircraft security search shall be conducted when;

- Any entry point security seal has been broken or tampered with
- The entry point security seal numbers do not match those recorded
- There is any reason to believe the aircraft may have been tampered with
- A specific threat has been received
- Local security procedures requirements.

Local security and the maintenance department of the airline concerned must be advised, and they will dictate the actions to be taken.

Searches shall only be conducted by qualified personnel only. For training requirements, please contact regional security. Searches shall be conducted in accordance with the search instructions applicable to the aircraft type.

No security search shall be conducted without prior agreement from the aircraft operator.

3.10.5 Crew and Supernumerary Baggage

Crew and supernumerary baggage shall be security screened as per local airport security procedures at their point of origin.

The baggage shall remain with the crew or supernumerary at all times in the Airside environment. Crew and supernumerary shall be responsible for ensuring their baggage accompanies them on their flights from point of origin to their point of destination. Baggage reconciliation shall not be performed for flights operated for DHL.

When loading onto the aircraft, baggage shall be loaded and secured in the supernumerary area or loose load compartment as required by aircraft type.

UNCONTROLLED DOCUMENT

UNCONTROLLED DOCUMENT

UNCONTROLLED DOCUMENT (17 DECEMBER 2024 16:19:14)