UNCONTROLLED DOCUMENT

UNCONTROLLED DOCUMENT



6. Cargo and ULD Handling

Revision: 6
Date: 05 December 2024

6.0 Export Cargo

6.1 Outbound Material on Commercial Flights

6.2 Handling Unit Weighing Procedure

6.3 Accuracy of Scales

6.4 General Freight Delivery - Checks Before Unloading

6.5 General Freight - Station of Origin Checks

6.6 Cargo Security

6.7 Storage of Cargo

6.8 Move Shipments from Warehouse to the Hold Area for Ramp Transportation

6.9 General Freight Weights and Dimensions Procedure

6.10 Personal Protective Equipment

6.11 Loading of Cage / ULD / FTU

6.12 Freight (ULD) Build-up

6.13 Final Flight Documents

6.14 Information and Data Transmission to Load Control

6.15 Assignment of Freight to Movement

6.16 Road Vehicle Procedures

6.17 Recovery of Off-Loads on DHL Air and Road Movements

6.18 Commercial Up-lift Procedures

6.19 General Freight Procedures

6.20 Network Reports Compilation

6.21 Post Operations Check

6.22 Cargo Handling Appendices

6.23 ULD Handling

6.24 Handling of ULDs

6.25 List of ULD Types

6.26 ULD Inventory Control

6.27 Serviceability of Loading Material

6.28 ULD Management

6.29 ULD Handling Appendices

UNCONTROLLED DOCUMENT (05 DECEMBER 2024 12:47:12)

UNCONTROLLED DOCUMENT

Page	Date	Comment
33	02 December 2024	The maximum weight for a piece loaded in the bulk hold of an aircraft is 30 kg (70 lbs). Bulk pieces exceeding 30 kg may be loaded in the bulk hold only if the flight sector has been pre-approved for shipments exceeding this weight limit and is operated by non-containerized aircraft (E.g. Cessna Caravan, ATR 42). *(Important)*
37	03 December 2024	Certified straps shall not be used as a primary restraint for palletized loads on 'N' registered (US operated) aircraft, except for aircraft engines, vehicles, or any Special Loads for which a Special Loads Tie-down Plan has been provided by the operator. *(Important)*

UNCONTROLLED DOCUMENT

UNCONTROLLED DOCUMENT

UNCONTROLLED DOCUMENT (05 DECEMBER 2024 12:47:12)

UNCONTROLLED DOCUMENT

6.0 Export Cargo

6.0.1 Acceptance and Checking of General Freight

1. General Procedure

The acceptance of general freight shall include the following:

a) Identification of shipments
b) Check for damage and tampering of cargo
c) Check of documentation of shipments
d) Check for serviceability of Unit Load Devices (ULDs)
e) Checks for nets, ropes, straps, protective materials, shoring are not damaged and do no obstruct shipment's handling
f) Check for special cargo requirements (including Carrier's instructions)

2. Acceptance Checks

General freight shipments are checked to establish that the shipments are booked and ready for Export. The following procedure must be adhered to:

The ACS Standard Operations Procedures must be adhered to:

- All general freight shipments entering the Network must be scanned into the appropriate application prior to departure
- The shipments and shipment paperwork must be checked against the appropriate documentation (e.g. CMR, Delivery Note etc.)
- It must be checked if Dangerous Goods Shipments are IATA compliant and 49 CFR compliant (if final Destination in US). The person carrying out Dangerous Goods Acceptance must hold a valid IATA Certification and, when required, be qualified under the appropriate carrier approved program. *(*see DHLAGOM **7.7 - Handling of Dangerous Goods** *)*
- All Shipments must have correct labelling
- The Originator must report all Shipment Export details and discrepancies found using the relevant application
- Any applicable local regulatory requirements

All units which were not built by DHL staff at a DHL facility must be inspected by qualified DHL personnel, or DHL certified appointed agent, to ensure compliance with DHL's ULD Build-Up principles and DHL's ULD Serviceability criteria. This check must be done prior to on-load onto the aircraft with sufficient time allowed for a thorough and comprehensive inspection.

NOTE: The ULD inspection as described above is not intended as a replacement of the final ULD check conducted by the loading supervisor immediately prior to on-load, which must continue to be carried out as per standard procedure.

For Interline cargo, refer to the ACS Procedures, current edition.

It is the responsibility of the local station to implement the provisions of the Aircraft operator's Security Program for the operating airlines on which the freight will be travelling, as per the Service Level Agreement.

UNCONTROLLED DOCUMENT

UNCONTROLLED DOCUMENT

UNCONTROLLED DOCUMENT (05 DECEMBER 2024 12:47:12)

UNCONTROLLED DOCUMENT

UNCONTROLLED DOCUMENT

UNCONTROLLED DOCUMENT

1. **Damage Checks Shipment or ULD**

When unloading bulk shipments or handling units from the vehicle the following must be checked/actioned as appropriate:

- Check if individual pieces or units are damaged

In the event of damage to either individual piece(s) pass for damage handling. If ULD is damaged, pass for damaged ULD handling. (See DHLAGOM **6.24.4 - Handling Damaged or Unserviceable Loading Equipment**)

2. **ULD or Handling Unit**

If an individual handling unit is for Transfer, Weigh HU. If HU is not for transfer, pass to sort.

3. **Security Controls**

Any security screening required for the acceptance of a shipment shall be performed by trained and certified personnel only.

6.0.2 Booking and Document Cross-check

1. **General Procedure**

It is essential that the criteria for cargo acceptance are strictly adhered to. Failure to comply with this requirement could have serious implications for the safety of the aircraft and crew as well as staff involved in the handling of such shipments.

The following procedure must be complied with:

- Cross-check individual pieces or consignments are booked, have been pre-alerted and are shown on Master Air Waybill MAWB
- Check if shipment is Dangerous Goods compliant with IATA regulations and 49CFR (if final destination in US)
- Check if ACS Booking Requirements are met
- Check Handling instructions and additional handling codes fit carrier booking.
- Check that embargoes and operational restrictions are adhered to as per state requirements at origin, transit, destination and as published by the carrier.
- Check dimensions/volume and weights are as per booking
- Check for heavy, big, and overhanging cargo
- In case of Shipper Built Units (SBUs), all points listed above must be checked for conformity and the unit's airworthiness

2. **Validate Information against the Booking and Update**

Make comparative checks and verifications between:

- e-AWB information against the Booking and register any discrepancies; Combine the registered discrepancies, if any, with the booking information;
- Inform the carrier representative of the discrepancy as agreed; the physical and documentary elements as established during the ready for carriage checks; the established security status.
- Perform the following based on any discrepancies found in the process:

UNCONTROLLED DOCUMENT (05 DECEMBER 2024 12:47:12)

UNCONTROLLED DOCUMENT

- Initiate charges correction advice (CCA) issuance, if required;
- Correct booking records in system;
- Safety and security issues, even if mitigated, are reported to the carrier and to local authorities, if required.

In accordance with carrier instructions, send RCT and RCS messages in the cargo handler system to register cargo acceptance once all shipment information is reconciled.

Accept the cargo and confirm the e-AWB is ready for carriage in status message (XFSU (RCS)).

3. **Shipment Discrepancies**

If in doubt whether to accept the item as a result of discrepancy, contact Regional ACS for further information and instruction. Take the following action:

- Any discrepancy between items on MAWB and pre-alerted and those on vehicle should be noted on the Agent/Driver transport document
- Update system where required. E.g. 'Gateway Comments' in CDB/TGV
- Check all paperwork available
- If Dangerous Goods, See DHL AGOM **7. Dangerous Goods**
- Check for discrepancies against:

  - Consignment Security Declaration

  - Paperwork against freight

  - Freight/Paperwork against all appropriate documentation (e.g. CMR, Delivery Note etc.). Note discrepancies on Agent/Driver transport document. Major issues should be communicated to Regional ACS

  - Forward paperwork as per material routing and in accordance with the Global Standard Flagging Procedure

- Check labeling and packaging. The labels must contain: Origin, Destination, MAWB number, Barcode, Product type.

If item is damaged or there is evidence of suspected pilferage and not fit for transport, refuse to accept item.

If item is damaged but fit for transport, repack the item and note damage on the Agent/ Driver transport document.

In the event of suspected pilferage Security must be advised immediately. Staff must comply with the instructions of local Security.

- Update system. E.g. 'Gateway Comments' in the ACS Central Data Base, (CDB).

4. **Discrepancy Correction**

Contact local Customer Services or Dangerous Goods Department depending on the issue, e.g.:

- Incorrect DGR information on Shippers Declaration
- More pieces handed over than stated in MAWB (T1 Shipment)
- Country specific wood packaging instructions not adhered to

UNCONTROLLED DOCUMENT (05 DECEMBER 2024 12:47:12)

UNCONTROLLED DOCUMENT

- Other issues

Depending on the nature of the discrepancy await further instructions from Customer Services or Restricted Commodities Group.

5. **Incorrect Documents**

Documents that are incorrect e.g. wrong destination or embargo in force (Commercial Passenger Aircraft), advise appropriate authority (may differ according to local procedures), who can refuse to accept documents, sign the driver's delivery order as refused and record reason why refused.

- Advise Regional ACS

6.0.3 Goods Check

1. **General Checks**

The following checks are to be carried out

- Check and count pieces received against pieces expected on the MAWB or Cargo Acceptance Note. Refer to designated authority or Export Lead if there are discrepancies found. Contact local Customer Service office and await further instructions.
- Spot checks are carried out on weight of cargo as requested by the Export Supervisor / Lead Agent and all outsized cargo is measured to ensure that it can be accommodated on booked flight (aircraft type) If discrepancy is found contact local Customer Service Office and await further instructions.
- Where the facility exists small parcel shipments may be accepted at Reception point. Criteria are max. weight 25 kg per parcel, max weight per shipment and parcels must comply with small parcel dimensions
- Store in small parcel cages, place very small packages into appropriate sacks to avoid them being mislaid and assist with locating e.g. CDs, DVDs etc.
- Check for damage and/or pilferage.
- Check labelling on each item of cargo, must have MAWB number and airports of origin and destination shown. Mixed consignments of dangerous goods and non-dangerous goods must be sorted and loaded on separate pallets. Always stack dangerous goods in accordance with label and in such a way to make physical DGR label checking easy e.g. labels facing outwards.
- For all airline consignments requiring bar-code labels, delivery drivers should be given labels to attach to each piece within the shipment.
- All shipments must be packed in a manner that is safe for transport with ordinary care in handling and to preclude injury or damage to any person, cargo or property.

This will ensure that the correct label is attached to the correct piece and that DHL employees will not be held responsible for any cross labelling that may occur. However, assistance can also be offered to drivers if there are a large amount of pieces to be labelled.

2. **Drums**

Check condition of all drums before acceptance. The Export Supervisor or Door Controller should be contacted in case of damage. All delivery notes must be stamped with the appropriate stamp declaring the condition of the drums has not been acknowledged and are accepted only subject to a full drum or DGR check.

UNCONTROLLED DOCUMENT

UNCONTROLLED DOCUMENT (05 DECEMBER 2024 12:47:12)

UNCONTROLLED DOCUMENT

3. **Live Animals**

When accepting live animals (AVI) the designated authority must inspect for compliance of IATA and national procedures.

Where appropriate, the cages must have upright and AVI labels; they must be the correct size for animal and be weighed and measured. The animals are taken direct for loading or stored in the export AVI warm room (unless too big), until the flight time.

6.0.3.1 Goods Failing Checks

Goods that are not accepted as OK are to be reported to the appropriate Warehouse Export Supervisor (or other designated authority) who will decide whether to accept or refuse the goods. The appropriate person will liaise with local Customer Service Office, Dangerous Goods Office and/or Regional ACS as required.

If shipment is refused, see (2) shipment discrepancies under **6.0.2 - Booking and Document Cross-check**

6.0.4 Acceptance of Goods and Documents

For goods and documents that are deemed to be suitable for acceptance/carriage the following procedure applies:

1. **Goods and Documents Correct**

For goods and documents received complete and correct, a Cargo Acceptance Note should be completed, signed and attached to file copy MAWB, the customer's delivery sheet must be signed and time-stamped (if required).

2. **Goods without Documents**

For goods accepted without documents a Cargo Acceptance Note is completed, noting details of heavy or outsize cargo, signed with details of the accepting agents, works or reference number and send it (time and date stamped) to operations. The customer's delivery order must be signed (if required).

This scenario is usually as a result of late or MAWB omission. The relevant MAWB may be completed by DHL staff or await subsequent arrival from the shipper.

3. **Accepted Shipments**

For shipments that are accepted carry out the following:

- Obtain Drivers signature on transport document.
- Sign Agent's / Driver's transport document. This confirms that DHL have accepted the Shipment.
- Capture Export Shipment data using one of the following tools Intranet TGV check-In - For discrepancies: Intranet (ACS CDB Module ‘GTW Comments’) Standard e-mail reporting
- Export report must be available within 30 minutes of ATD of Movement.

Report Pieces and/or Paperwork that missed connection using TGV - Intranet (ACS CDB Module Left Behind) Standard e-mail reporting.

UNCONTROLLED DOCUMENT

UNCONTROLLED DOCUMENT

UNCONTROLLED DOCUMENT (05 DECEMBER 2024 12:47:12)

UNCONTROLLED DOCUMENT

4. **Receiving Shipments in Warehouse**

Documents are received from the flight by the Cargo Handling Agent. If paper AWBS are still used, their presence is checked as well.

This step holds important elements of Customs compliance.

Shipments are taken over by the Cargo Handling Agent according to the FFM message (Airline Flight Manifest Message). AWB data are compared with the FFM as received from the origin station of the flight.

UNCONTROLLED DOCUMENT

UNCONTROLLED DOCUMENT

UNCONTROLLED DOCUMENT (05 DECEMBER 2024 12:47:12)

UNCONTROLLED DOCUMENT

6.1 Outbound Material on Commercial Flights

1. **General**

Generally speaking, the procedures for preparing and presenting General Freight shipments that have been booked on commercial aircraft, passenger or dedicated freighter aircraft, are the same as for DHL aircraft.

The only exceptions to the above are any additional restrictions or embargoes that are applied by the aircraft operator. This could be for security or load factor reasons.

When a General Freight shipment is offered for commercial carriage, either as a regular commercial arrangement with the airline or on an ad-hoc basis the following procedure MUST be adhered to:

- All applicable security regulations must be adhered to.
- All Handling Units and Pieces must be weighed and counted.
- Proof of handover must be obtained for all freight handed over to airlines/handling agents.
- All Handling Units and Pieces for the Movement must be labelled, weighed, recorded and consolidated in time for cut-off deadline.
- Breakdown sheets must be filled out accurately and passed to the office for follow up.
- Paperwork must be loaded in accordance with flight instructions
- Weight of bags must not exceed local Health & Safety regulations or a maximum of 25 kg (55 lbs), whichever is lower.
- DHL equipment must not be used on commercial air.

2. **Security**

All airlines, national and international security requirements must be carried out as in force at the time. This includes any additional requirements of the airline and or national regulations required as an emergency temporary measure, irrespective of the timing of such notification, or implementation.

3. **Consolidation**

The following instructions must be adhered to:

- Ensure that no DHL equipment is used on commercial flights.
- Complete breakdown sheet
- Ensure that weight of pieces does not exceed local Health & Safety regulations or 25 kg (55 lbs), whichever is lower
- Details must include Weight, Pieces, Destination, Product
- Pass information to the Flight Monitor
- Label bag with MAWB label

Every individual bag or part of an airline shipment must have a MAWB label. If local airline tags are required they are to be placed in the container pouch.

Advise the Flight Monitor of any discrepancies and amend documentation as required.

UNCONTROLLED DOCUMENT

UNCONTROLLED DOCUMENT

UNCONTROLLED DOCUMENT (05 DECEMBER 2024 12:47:12)

UNCONTROLLED DOCUMENT

6.1.1 Handover Material to Airline

1. **DHL Handling**

If the flight is handled by DHL then the material is taken to the aircraft and handed over to the loading crew.

Obtain confirmation that the material will be loaded.

2. **Third Party Handling**

If the flight is not handled by DHL: then the material will be handed over at a specified location to the handling agent or airline.

Confirmation of receipt should be obtained ensuring date, time; quantity (number of pieces) and weight are readable.

UNCONTROLLED DOCUMENT

UNCONTROLLED DOCUMENT

UNCONTROLLED DOCUMENT (05 DECEMBER 2024 12:47:12)

UNCONTROLLED DOCUMENT

6.2 Handling Unit Weighing Procedure

1. **Requirement**

It is an essential requirement to establish the weight of material and any ancillary equipment, i.e. ULDs in order to avoid overloading and to establish the correct loading plan and fuelling of aircraft.

Note:

This procedure does not apply to material being transported by road, where the full vehicle is weighed on a weighbridge after loading.

6.2.1 Originating Load

1. **Carriage by Road Movements**

All material loaded onto road Movements must be weighed either before loading or by weighing the loaded vehicle by weighbridge following loading.

2. **Carriage by Aircraft Movements**

Material intended for belly & loose load compartments on an aircraft must be scanned into a Freight Transfer Unit (FTU), weighed and receive a Handling Unit Identification (HUID).

The physical ULD registration must be checked with the data entered and corrected where necessary.

HUID of Transfer ULDs from non-AHS sites must be entered into AHS

All tags must be put into the container pouch and not stuck on the container and where no pouch is available attached with a strap to ULD/Cage/FTU.

6.2.2 Transfer ULDs

For NORAM variations see DHLAGOM Americas Regional Variations

Transfer ULDs from road stations must be reweighed, except where the origin site has certified scales. The site must also have been audited to check the process and the first 10 units must have been check weighed.

Minimum of twice per month a random check must be performed on the ULDs from a movement originating from such a station and the hub/gateway must keep records to prove these checks have been done.

Condition of ULDs and compatibility to all onward / transfer movements must be checked pre loading, according to the DHL Work Instructions, Network Planning Group (NPG) Routing Instructions and/or external carrier/Authorities.

ULDs that have been merged on the ramp **must** be re-weighed.

A verification is required that goods in transit are protected from unlawful interference and correct reconciliation procedures undertaken.

6.2.2.1 Shipments in Transit are Security Cleared

Perform appropriate security checks on transit cargo; prepare cargo for X-ray and/or Explosive Trace Detection (ETD) screening in compliance with carrier instruction based on en-route and destination securit regulations.

Conduct detailed checking on e-AWB, cargo condition and piece count upon X-ray/ETD process. If discrepancies are found, inform the concerned carrier to seek further instructions.

UNCONTROLLED DOCUMENT (05 DECEMBER 2024 12:47:12)

UNCONTROLLED DOCUMENT

Stow screened shipments in secure storage location.

Prepare cargo for X-ray and/or Explosive Trace Detection (ETD) screening in compliance with carrier instruction.

6.2.2.2 Move Shipments in Transit to Appropriate Location

Based on Pre-alert or FFM messages (Airline Flight Manifest Message), check shipments in transit and for transfer according to the shipment record and information and the connection time. Move these ULDS for immediate delivery to the delivery area only if documentation and customs permit delivery.

(a) Move the cargo away from the unloading area and store in the appropriate secure storage location making sure that all special instructions, separation distances between incompatible commodities, and customs regulations are obeyed;
(b) Record storage location and communicate this information so that it can easily be retrieved; Re-locate transit shipments into the outgoing shipment process.

Conduct security checks and screening as required.

Arrange for the transfer of shipments to other carriers or cargo terminal operators.

Take due account of special storage requirements during the process.

6.2.2.3 Move Shipments to be Transferred to Other Carriers

Based on Pre-alert or (X)FFM messages (Airline Flight Manifest Message), identify Shipments to be transferred and move them to other carriers against a transfer manifest.

Conduct security checks and screening as required.

Obtain confirmation of the receiving carrier or its Cargo Handling Agent.

The recording of this step in the carrier or warehouse system triggers the TFD (transferred) message.

The transferring party shall provide the receiving party a receipt, in paper or electronic form, for the transferred unit.

UNCONTROLLED DOCUMENT

UNCONTROLLED DOCUMENT

UNCONTROLLED DOCUMENT (05 DECEMBER 2024 12:47:12)

UNCONTROLLED DOCUMENT

6.2.3 Weighing Procedure

6.2.3.1 Weighing Equipment

For NORAM variations see DHLAGOM Americas Regional Variations

Appropriate scales must be available and calibrated to enable the weighing of a load or to check the laden weight of a vehicle.

All weights must be registered in the scale or movement management application.

6.2.3.2 Weighing Handling Units

For NORAM variations see DHLAGOM Americas Regional Variations

1. **Select Item**
   - Compare ULD Number with ops data entered, using correct system application
   - Make corrections as necessary
   - If Handling Unit IDs from non AHS sites (road and ramp transfers) need to be entered here, enter HUID number
2. **Weigh item**
   - Dolly weight must be subtracted from the gross weight
   - ULD weight must be subtracted if the ULD will not travel with the material
   - ULD tare weights on container must be checked
   - Ensure correct tare weight used for different types of ULDs and FTUs
   - Material intended for belly or loose load compartments on an aircraft must first be loaded to an FTU and receive an HUID
   - A HUID label must be produced (printed) at the time of scaling with the physical HU registration on the label as well as all other required info
3. **Record weight**
   - In case there is no electronic data transfer to Sable e.g. by NMIV or AHS of the scaled weight at the scaling station a scaling/weight record sheet shall be used to document the weights. The record sheet shall be used to enter the weights into Sable.
   - Or directly enter correct weight in the scale or movement management system and verify weight by a second staff member.
   - Enter correct weight in the Scale or Movement management system.
   - Advise supervisor of large discrepancies regarding data, weights, physical items, etc (or action/information)
   - Adjust contents description if wrong

UNCONTROLLED DOCUMENT (05 DECEMBER 2024 12:47:12)

UNCONTROLLED DOCUMENT

4. **Create Handling Unit Label**

- Ensure no extra labels on handling units
- Perform final check to ensure all old labels/tags have been removed.
- Print label
- Verify via a double check if the scaled weight and all other information mentioned on label is correct and put label in pouch, attach with a strap where no pouch available
- Add the Dangerous Goods tag to the ULD tag so it is clearly displayed if there is DGR in the Handling Unit*
- Pass material for further handling (loading to): road vehicle, aircraft or commercial uplift
- Check serviceability of Handling Unit condition and reject if it does not meet the specified criteria. If the scale operator cannot perform this check then the driver must do it

A visual check on the external condition of the ULD and compatibility to movement, including any transfer sectors, must be done according to the ULD Criteria Check list**.** (See DHL AGOM **6.29 - ULD Handling Appendices**)

Any damage identified must be reported to the appropriate Supervisor or Manager for further action (e.g. cross-loading, Flagging). Note extent of damage on Unserviceable (UNS) tag where required.

* See Appendix C for Dangerous Goods ULD Tag Job Aid.

UNCONTROLLED DOCUMENT

UNCONTROLLED DOCUMENT

UNCONTROLLED DOCUMENT (05 DECEMBER 2024 12:47:12)

UNCONTROLLED DOCUMENT

6.3 Accuracy of Scales

For NORAM variations see DHLAGOM Americas Regional Variations

The accuracy of all scales (weigh bridges) used for weight determination of load shall be checked with a known weight at least every three months and the results recorded and records retained.

Actions are to be recorded and retained in accordance with applicable regulations and/or requirements of the customer airline.

A quality control check shall be made at least once per year, as well as after each repair, or according to local regulations whichever is the shortest period.

All records regarding accuracy of scales must be retained on a local file for a minimum period of 6 months.

6.3.1 Verification of Weights

1. **General**

For NORAM variations see DHLAGOM Americas Regional Variations

The weight of the ULDs shall be determined prior to dispatch to the aircraft by use of a weigh bridge of acceptable accuracy.

If an above ground (raised) weigh bridge is used to weigh dollies care must be taken to ensure that the vehicle or dolly to the front and the rear of the dolly being weighed does not affect the true weight.

In the absence of such facilities, a tally should be made of the individual weights of each piece loaded into the ULD. **Cargo Manifest Weights are not to be used for this purpose**.

The determined weight of each ULD and its load shall be recorded on the ULD Tag and entered into the ULD/Bulk Load Weight Statement. These figures shall also be recorded on the Load-plan and Load-sheet.

If a scale is out of calibration, the scale must be taken out of the operation and tagged “out of service”.

2. **Transfer Units**

Notwithstanding the following, any consolidation or addition to Transfer Units will require them to be re-weighed. ULDs for aircraft to aircraft transfer need not be re-weighed provided that they have originated from a station that has been verified by audit to be in compliance with **6.3 - Accuracy of Scales** above.

Transfer Units that arrive by road shall be subject to quality controls at the station at which they are loaded on an aircraft. This quality control shall consist of the following:

- An audit of the origin point to ensure any scale used is in full compliance with **6.3 - Accuracy of Scales**
- They are transported in a secure manner to prevent tampering (sealed unit or truck)
- The first 20 units delivered are re-weighed to check actual weight against advised/noted weight on ULD tags
- Once the quality of weight reporting has been established, a random check of ULDs delivered will be carried out to sample not less than 1 ULD per 10 Units delivered and a procedure put in place to ensure this takes place

Any ULDs that arrive by truck which fail to comply with any of the above, or, on random check are found to be of different weight than advised, must be re-weighed and/or re-tagged before loading them onto an aircraft.

UNCONTROLLED DOCUMENT (05 DECEMBER 2024 12:47:12)

UNCONTROLLED DOCUMENT

6.4 General Freight Delivery - Checks Before Unloading

1. **Security Status and Collation of Shipment Documentation**

Before unloading commences, the following documentation must be complete and checked as appropriate:

- A Consignment Security Declaration must be available as per local / operator requirements
- Documentation must be checked to ensure that all Shipments are Customs cleared for Export
- Local Customer Services must contact the Shipper if Shipments are not Customs cleared
- Check that any Dangerous Goods Shipments are IATA compliant and 49 CFR compliant (if final Destination in US)

2. **Collect Export Data**

Use export reports to determine expected Shipments: Following reports can be used:

- TGV: Export List
- Cognos: Expected Uplift ex Origin Report
- Email: Export Pre-Alerts email

3. **Log Arrival Time**

Carry out the following

- Log time of arrival of the shipment at the locally designated checkpoint
- Report information to REGIONAL ACS

4. **Check Security Status**

Carry out the following:

- Check Consignment Security Declaration (if locally or operator required).
- Check that the vehicle's seal is unbroken, if a seal is present.
- Check if the seal number agrees with details on the Agent/Driver transport document.
- Check the condition of the tarpaulin or loading compartment.
- Driver must obtain permission from the DHL Operational Representative or local authorised agent to open a Customs sealed truck.

5. **Customs Seal**

If a Customs seal is broken, communication between GENERAL FREIGHT Handler, Driver, Customs and Handling Agent should take place to decide on course of action.

6. **DHL Security Seal**

If a security seal is broken, report this information to Load Lead for further details. See Refusal of GENERAL FREIGHT Shipment below

UNCONTROLLED DOCUMENT

UNCONTROLLED DOCUMENT

UNCONTROLLED DOCUMENT (05 DECEMBER 2024 12:47:12)

UNCONTROLLED DOCUMENT

8. **Refuse General Freight Shipment**

- Refuse non-conforming Shipment for Uplift
- Put Shipment on hold and Contact Customer Services

8. **Recovery of Shipment Paperwork (MAWB)**

- Recover shipment paperwork - MAWB

9. **Confirmation of Goods Ready for Export**

Confirm that all goods are ready for export on presentation to DHL. Ensure proof of clearance paperwork, which should have been provided by the Customer, is included in the paperwork pouch.

If no proof of clearance is received for third party shipments then the shipment is to be refused unless previously agreed. Airline is to be notified immediately. Check for notification messages mentioning special requirements.

10. **Hold Shipment**

Put shipment on hold (See DHLAGOM **7.21 - Hold Material - Secure Area Procedure**)

Contact Local Customer Services (C.S.) and await further instructions. Customer Services must contact Customer/GSA when no proof of clearance is provided.

11. **Unload Approval**

Obtain Approval to Unload the Movement from Security and/or Supervisor / Manager as appropriate.

UNCONTROLLED DOCUMENT

UNCONTROLLED DOCUMENT

UNCONTROLLED DOCUMENT (05 DECEMBER 2024 12:47:12)

UNCONTROLLED DOCUMENT

6.5 General Freight - Station of Origin Checks

1. **Requirement**

On arrival at a departure gateway facility all GENERAL FREIGHT shipments, when unloaded, must be checked to ensure the shipments are booked and ready for export.

2. **Procedure**

Following offload the following procedure applies, ensuring that ACS Standard Operating Procedures are adhered to:

- All general freight Shipments entering the Network must be scanned into appropriate application prior to departure
- The Shipments and Shipment Paperwork must be checked against the appropriate documentation
- It must be checked if Dangerous Goods Shipments are IATA compliant and 49 CFR compliant (if final Destination in US). See DHLAGOM **7. Dangerous Goods**
- All Shipments must be correctly labelled
- The departure gateway must report all Shipment Export details and discrepancies found using the relevant application

3. **Unloading of GENERAL FREIGHT Piece /Handling Unit**

Carry out the following:

- Obtain Piece/HU from Vehicle
- If the Piece/HU is damaged, action as for damage handling
- If ULD is damaged, action as for damaged ULD handling
- If HU for Transfer, check weigh HU if required
- If HU is not for transfer, pass to sort

4. **Cross-check Piece (Booking / MAWB)**

Check Pieces booked/pre-alerted and on MAWB.

Check if shipment is Dangerous Goods compliant with IATA Regulations and 49CFR (if final destination in US).

Check if ACS Booking Requirements are met.

If in doubt whether to accept the item as a result of discrepancy, contact Regional ACS or other designated authority, for further information and appropriate instruction.

UNCONTROLLED DOCUMENT

UNCONTROLLED DOCUMENT

UNCONTROLLED DOCUMENT (05 DECEMBER 2024 12:47:12)

UNCONTROLLED DOCUMENT

5. **Discrepancies on Transport Document**

Any discrepancy between items on Master Air Waybill (MAWB) and the pre-alert and those on vehicle should be noted on the Agent/Driver transport document.

Update system where required, e.g. 'Gateway Comments' in CDB/TGV.

6. **Check Label and Complete Paperwork Set**

Check all paperwork available.

- If Dangerous Goods, See DHL AGOM **7. Dangerous Goods**
- Check for discrepancies against

  - Consignment Security Declaration

  - Paperwork against freight

  - Freight/Paperwork against appropriate documentation Note discrepancies on Agent/Driver transport document. Major issues should be communicated to Regional ACS.

  - Forward paperwork as per material routing and in accordance with the Standard Flagging Procedure

- Check labelling and packaging. The labels must contain: origin, destination, MAWB nr, barcode, Product type.
- If item is damaged and not fit for transport, refuse to accept item

7. **Refuse Shipment**

- If item is damaged but fit for transport, repack the item and note damage on the Agent/ Driver transport document. (See DHLAGOM **7.17 - Managing Damaged Pieces**)
- Update system, e.g. 'Gateway Comments' in CDB

8. **Problem Solution**

Having determined a specific problem, the following actions should be taken to resolve the matter

- Contact local Customer Services or Dangerous Goods Department depending on the issue, e.g. Incorrect DGR information on Shippers Declaration, More pieces handed over than stated in MAWB (T1 Shipment), U.S. wood packaging instructions not adhered to.
- Await instructions from C.S. or Restricted Commodities Department/Dangerous Goods Department

9. **Sign Transport Document**

- Obtain Drivers signature on transport document.
- Sign Agent's / Driver's transport document. This confirms that DHL have accepted the Shipment. (Do not sign if shipment is being refused)

UNCONTROLLED DOCUMENT

UNCONTROLLED DOCUMENT

UNCONTROLLED DOCUMENT (05 DECEMBER 2024 12:47:12)

UNCONTROLLED DOCUMENT

10. **Refusal of General Freight Shipment**
    - Refuse Shipment not fit for transport.
11. **Verify Export Report Sent**

Capture Export Shipment data using one of the following tools:

- Intranet TGV check-In
- For discrepancies: Intranet (ACS CDB Module for Comments)
- Standard e-mail reporting

Export report must be available within 30 minutes of ATD of Movement.

Report Pieces and/or Paperwork that missed connection using:

- TGV
- Intranet (ACS CDB Module Left Behind)
- Standard e-mail reporting (General Freightgtw@dhl.com)

UNCONTROLLED DOCUMENT

UNCONTROLLED DOCUMENT

UNCONTROLLED DOCUMENT (05 DECEMBER 2024 12:47:12)

UNCONTROLLED DOCUMENT

6.6 Cargo Security

It is the purpose of cargo security controls to ensure that no Prohibited items, Weapons or Explosives are taken on board an aircraft in any cargo, courier, and express parcel and/or mail consignments.

These cargo security controls are defined by:

- The Aircraft Operator's Security Program
- The DHL Global Security Manual
- The DHL Express Global Air Cargo Security Program
- The country's Civil Aviation Authority

It is the responsibility of the local station to implement the cargo security controls as defined in the Aircraft operator's Security Program for the operating airlines on which the freight will be travelling, the DHL Global Security Manual, and the DHL Express Global Air Cargo Security Program. It is the responsibility of the local stations to implement the facility security controls as defined in the DHL Global Security Manual, in order to prevent any unauthorized access by persons or vehicles into the facilities where cargo handling is conducted and any unauthorized interference with the cargo.

Local stations shall have a local security manual detailing their security controls, and approved by their country's Civil Aviation Authority. As a minimum, the local security manual shall:

a. Have a process to ensure, where a regulated agent or known shipper program exists, known cargo for transport on a commercial aircraft is accepted as follows:
    i. Delivered by a regulated agent, a nominated representative of an entity approved by the relevant authority, or a known representative of the operator;
    ii. Free from any signs of tampering;
    iii. Accompanied by all required information (paper or electronic) corresponding to the cargo being delivered, including documentation that details the security status (e.g., consignment security declaration-CSD);
    iv. Subjected to additional security controls, if required by the operator.

b. Have a process to ensure, where a regulated agent or known shipper program does not exist, unknown cargo for transport on a commercial aircraft is accepted in compliance with appropriate security control requirements of the state(s) applicable to such cargo shipments, including:
    i. Documentation as to the identity and details of the shipment;
    ii. Screening in compliance with regulations of the state(s), and in compliance with the provisions of the DHL Global Security Manual.

UNCONTROLLED DOCUMENT

UNCONTROLLED DOCUMENT

UNCONTROLLED DOCUMENT (05 DECEMBER 2024 12:47:12)

UNCONTROLLED DOCUMENT

6.7 Storage of Cargo

1. **General**

Cargo is stored according to size and weight, special requirement or x-raying. When using export racks the last four numbers of the MAWB must be shown on the cargo for easy identification from floor level, the maximum weight of whole rack bay as shown must not be exceeded under any circumstances. Cargo exceeding the rack weight and/or published dimensions must be stored in the bulk area.

2. **Prepared Freight**

Store pallet/container on Roller Beds, Stillage or warehouse racks only. Store cages and bulk in trucks or warehouses.

Load pallet/container onto truck or aircraft from store using order of trim supplied by Load Control, Aircraft Dispatcher or handled carrier representative.

Load cages or bulk onto truck for departure to flight from store, pass details of trim to Lead Agent / Export Supervisor to assist with correct loading order.

6.7.1 Urgent or Special Loads

1. **General**

Urgent shipments of Express cargo, newspapers & films, animals etc are loaded and handled as a priority, cargo not requiring x-ray is taken direct to storage or flight loading, other shipments are x-rayed and moved directly for flight loading or storage.

2. **Cargo Requiring Special Storage**

Shipments to be x-rayed are taken to x-ray and stored according to requirements after x-ray process and recording is completed.

Cargo is to be stored in accordance with the requirements of the IATA Dangerous Goods Regulations.

Radioactive Material is to be stored in a RADAC Room (if not immediately loaded onto flight). Consignment details must be recorded in and out of the room on the RADAC Sheet. The room must be locked when unattended. The key is held by a locally designated authority.

Note: Local procedures may specify alternative areas for Radioactive Material; however, such areas must conform to IATA and National Regulations.

3. **Pre-Built Units**

The gross weight must be checked against the MAWB and exports notified of any discrepancy. The contour must be checked, ensuring that any overhang will not cause aircraft loading problems. Check that the pallet is properly wrapped in polythene.

Check that the net clips are correctly positioned and that the net is serviceable and tightly secured. If there are any doubts a Lead Agent, Supervisor or Manager as appropriate must be notified. Please also see DHL AGOM **6.29 - ULD Handling Appendices**.

Shipper Built ULDs (SBUs) must be stored separately from ULDs to be broken down. Fill in the appropriate ULD tag with all the relevant information and attach it to the pallet. Only store in the appropriate computer system if checked and approved using the allocated flight number on the input transaction.

UNCONTROLLED DOCUMENT

UNCONTROLLED DOCUMENT

UNCONTROLLED DOCUMENT (05 DECEMBER 2024 12:47:12)

UNCONTROLLED DOCUMENT

5. **Restricted Commodities**

Restricted Commodities are stored in DG bays, or as close as is possible. Use appropriate lifting equipment when moving dangerous goods in and out of the DG bays.

5. **Express Cargo Shipments**

Express cargo shipments are stored in the normal storage areas.

6. **Live Animals (AVI)**

Where provided an AVI warm room should be used to store live animals.

AVI Shipments for the Warm Room are recorded in duplicate on either the Import or Export Warm Room Record Sheets. The original stays in the warm room until issue of the shipment whereupon it is put in the closed file to act as a record.

The copy is given to the appropriate Lead Agent (or other designated authority) and passed onto Operations with either the Import Check Sheet or the Export Tally. The room must be locked when unattended and the indicator light must remain on when animals are stored within.

7. **Valuable Cargo (VAL)**

Details of Storing Valuable Cargo are found in (See DHLAGOM **7.21 - Hold Material - Secure Area Procedure**)

8. **Vulnerable Cargo (VUN)**

Contact the responsible Warehouse Supervisor or Manager for storage of special vulnerable cargo, e.g. Paintings, drugs, or other cargo of a nature that may be susceptible to pilferage. This area is kept locked when unattended - key is held by locally designated authority. Record shipment details in Vulnerable Register.

(See DHLAGOM **7.21 - Hold Material - Secure Area Procedure**)

9. **Transhipments**

Transhipments are treated as if received through export door landside

10. **Mail**

If there are no separate facilities for the handling of Post Office Mail then it should be treated as cargo.

UNCONTROLLED DOCUMENT

UNCONTROLLED DOCUMENT

UNCONTROLLED DOCUMENT (05 DECEMBER 2024 12:47:12)

UNCONTROLLED DOCUMENT

6.8 Move Shipments from Warehouse to the Hold Area for Ramp Transportation

Move the loaded ULDs, or the loose cargo, to the secure flight holding area, obeying all special instructions related to the cargo on that ULD, or for loose cargo, such as temperature control, proximity to other commodities etc.

(a) Secure ULD on dollies using restraints
(b) Secure fully open or fully closed all container doors and ensure that no part of the container door overhangs outside the edge of the dolly
(c) Check and secure any protruding cargo netting and/or plastic sheeting
(d) For transporting multiple pallets, secure entire stack to lowest pallet using cargo straps in longitudinal and lateral directions
(e) Where container and/or built-up pallet has overhanging section beyond the outer edge of the dolly, check and ensure this will not present a hazard to the unit or adjacent units during transit
(f) Drive within required speed limits, when transporting ULDs on dollies with solid/unsprang suspension, do not drive over 25 KPH
(g) Use only roadways having sufficient width to accommodate load width
(h) On arrival at transfer destination, position vehicle adjacent to ULD storage with correct horizontal and vertical alignment

The ULDs, or Loose cargo, should either be transferred to holding area roller beds or remain on the ULD transportation trolleys. Whenever possible, ULDs should be stored in a sheltered area during adverse weather conditions.

Consideration should be given to line-up ULDs to in-flight order, if known.

The control of the Cargo, both physical and documentation, passes from the warehouse operator to the ramp handler. This may be another unit of the same entity. The cargo handling agent records the time of delivery to the hand over point for each shipment (or part of it).

6.8.1 Preventing Water Damage

To prevent cargo and mail form water damage:

- Ensure that flights are not delayed or that there is no disruption before sending cargo and built ULDs to the ramp. (This to avoid that perishables, live animals and pharmaceutical are impacted by weather conditions or long wait times)
- Ensure moisture is removed from pallets and containers before placing cargo onto/into them.
- During changeable/unstable weather, always use tarps to protect shipments moving to and from the warehouse.

UNCONTROLLED DOCUMENT (05 DECEMBER 2024 12:47:12)

UNCONTROLLED DOCUMENT

6.9 General Freight Weights and Dimensions Procedure

1. **Requirement**

GENERAL FREIGHT must be weighed and measured, and the data captured i.e. actual weights compared with booked weights, in order to ensure the correct weight is invoiced.

2. **Procedure**

After offload of a shipment delivery the following actions are to be carried out:

- All GENERAL FREIGHT must be checked for weight verification.
- All GENERAL FREIGHT entering the network must be scanned into appropriate application prior to departure.
- Facilities with access to ACS applications must enter 75%7on in the application. Facilities without access to ACS applications must use a Charge Correction Advice (CCA) to report discrepancies in weight.
- All Pieces of a Shipment must be measured when performing a volumetric check. A 'volumetric check' label must be attached to all Pieces of a Shipment once checked.
- All Paperwork for transfer positions for a final destination must be placed in a dedicated paperwork pouch for this final destination.

3. **Capture General Freight Weight**

Select item for weight check. Weight and volume of all shipments that could have chargeable weight discrepancies must be checked. Where possible check should be made before Delivery Driver leaves. Prioritise checking according to cut-off times.

All Shipments must be subject to Acceptance Procedures.

4. **Checking Actual Weight**

When performing an Actual Weight check and an incorrect actual weight is identified take the following action:

- Record the discrepancy in a Charge Correction Advice (CCA); Forward this with other Billing paperwork. (See DHLAGOM **6.19.5 - Billing Process**)

UNCONTROLLED DOCUMENT

UNCONTROLLED DOCUMENT

UNCONTROLLED DOCUMENT (05 DECEMBER 2024 12:47:12)

UNCONTROLLED DOCUMENT

5. **Checking Volumetric Weight.**

Capture Volumetric Weight.

Perform a volumetric weight check. If an incorrect volumetric weight is identified carry out the following action:

- Record this in a CCA. Forward this with other Billing paperwork. (See DHL AGOM **6.19.5 - Billing Process**)

6. **Subsequent Handling**

Select item to be forwarded to the warehouse ensuring the following safeguards are met:

- Take care when building Handling Units
- Do not load heavy Shipments on light ones
- When using a forklift to load shipments, take extreme care when positioning forks. The shipment must cover the end of the fork tines.
- Ask for assistance in handling large or heavy items
- Report any leaks or spills and pass damaged pieces for Repack
- Where theft is suspected, inform security
- Lift boxes by diagonal corners and bags with both hands, where possible
- Avoid leaving packages lying around

If paperwork received but no freight, report to Regional ACS. When pieces can be identified as general freight, report the description to local Customer Services. If no information regarding origin or destination of piece is available, put on hold and advise Found Shipment Centre.

- Do not load Non-Conveyable material onto conveyor systems
- Empty pallets should be removed from unload area and carried to a pallet storage area
- Do not break down pallets marked 'Do not break down" or "Bulk"

7. **Restricted Commodities**

If any checked piece is classified as Dangerous Goods forward for Dangerous Goods handling. Use appropriate safety equipment when handling Dangerous Goods. (See DHL AGOM **7. Dangerous Goods**)

8. **Security Check Required**

If any checked piece requires a security check, forward the item for security check.

9. **General Freight for Sort/Load**

GENERAL FREIGHT forwarded to sort and load. Note the following:

If general freight is co-loaded with core material, then preferred loading is a NCY ULD. General Freight must only be loaded in handling units destined for hubs or gateways, not service centers. Scan general freight material into appropriate application and arrange containerisation wherever possible.

10. **Manifest Shipments**

All export Shipments must be manifested in the application (TGV). Print hard copy manifest if required.

UNCONTROLLED DOCUMENT

UNCONTROLLED DOCUMENT

UNCONTROLLED DOCUMENT (05 DECEMBER 2024 12:47:12)

UNCONTROLLED DOCUMENT

6.10 Personal Protective Equipment

Personal Protective Equipment (PPE) appropriate for their role and as per local Occupational Health regulations must be worn by all staff at all times while working in a cargo handling facility.

It is the responsibility of the local station to define and document minimum requirements for PPE appropriate for the roles conducted in the cargo handling facility and per local Occupational Health regulations. Consideration shall be given to providing PPE which provide:

- High visibility (E.g. Hi-vis clothing)
- Head Protection (E.g. Bump caps)
- Hand Protection (E.g. Gloves)
- Foot Protection (E.g. Steel-capped shoes)
- Hearing Protection (E.g. Ear plugs)

UNCONTROLLED DOCUMENT

UNCONTROLLED DOCUMENT

UNCONTROLLED DOCUMENT (05 DECEMBER 2024 12:47:12)

UNCONTROLLED DOCUMENT

6.11 Loading of Cage / ULD / FTU

6.11.1 General Procedures

To facilitate ease of loading, all pieces of outgoing material are consolidated into Cages, ULDs or FTUs. When consolidating individual pieces into a handling unit the following procedure must be complied with:

- All scanning must be done according to the: "Business Rules for Containerisation" and "Bagging Procedure for Shipment Containerisation"
- Flyers and small Pieces must be consolidated in bags according to product type and not loose loaded to ULDs/cages/FTUs
- The Network Bagging/Routing Guidelines and Standard Flagging Procedure must be adhered to
- Manual entries must be performed for all non pre-advised Shipments.
- An accurate visual check must be done to determine percentage load and multiples of 10% must be used when entering container/pallet volumes in the system
- Instructions on large pieces, such as "BULK" or "DO NOT BREAK DOWN", or similar, must be respected when loading
- All ULDs must be entered with correct registration
- Condition and serviceability of ULDs and compatibility to all onward / transfer movements must be checked pre loading, according to the DHL WI's, NPG Routing Instructions and/or external carrier/Authorities
- Correct ULD types must be used according to type of aircraft/road vehicle to be used
- Ensure excess water is removed from containers/FTUs and that plastic/cargo savers are used, if floor is wet, to line the base before loading commences
- All FTUs/HUs must be securely closed/strapped and protected from bad weather as per DHLAGOM **6.12.20 - ULD Weather Protection**
- Mis-sorts which cannot be transferred to the correct reload must be taken to a designated area for collection

General Freight is an airport to airport product - it must not be loaded to Handling Units destined for Terminals.

6.11.2 Pre-sort Items

Where applicable and when individual items are pre-sorted the following actions must be carried out:

- Report any leaks or spills and if necessary proceed with damaged piece handling (See DHLAGOM **7.17 - Managing Damaged Pieces**)
- Process any unidentified pieces (See DHLAGOM **7.15 - Managing Unidentifiable Pieces**)
- Adhere to applicable sort splits
- Match Piece to sort profile
- Sort pieces according to destination and/or postcode

When the above actions have been completed place in pre-sort area.

UNCONTROLLED DOCUMENT (05 DECEMBER 2024 12:47:12)

UNCONTROLLED DOCUMENT

6.11.3 Scanning of Material

1. **Preparation for Scanning**

The following actions must be taken when preparing pieces for scanning:

- Activate labels (if applicable)
- Check handling unit condition (ULD)
- A visual check on the external and internal condition of the ULD for serviceability and compatibility to movement, including any transfer sectors, must be done according to the requirements of the UCC and prior to loading
- Any damage identified must be reported to Load Lead for further action (e.g. block ULD in the system)
- Unserviceable ULDs must be rejected, use UNS tag and/or tape.
- If HU not linked to profile: Link HU to profile

2. **Scanning**

When scanning piece or complete handling unit the following procedure must be adhered to:

- Take mis-sorts, which cannot be transferred directly to the correct reload, to a designated area for collection
- Blocked shipments must not be loaded - they should receive exception processing as appropriate
- Report any leaks and spills and do not load Piece/Handling Unit. Pass Piece to Damaged Piece Handling or advise Dangerous Goods Department
- Process any unidentified pieces according to Process Found Shipment

Proceed to Scan Piece/Handling Unit. Ensure that all scanning must be done according to the "Business Rules For Containerisation' (Aviation) and the "Bagging Procedure for Shipment Containerisation".

- If Piece/Handling Unit not known to system, check if parameters are correct and take appropriate action
- If shipment details have to be entered manually, enter shipment details, Report to supervisor when an unexpectedly large number of manual entries are required
- Report any other obstacles consistently encountered when scanning pieces. For example, bar codes not working, data obscured or consistently incomplete/inaccurate data
- Process time definite shipments received without pre-alert immediately, with minimal shipment details (ECX type entry} and forward without delay

If Piece is blocked:

a) If Piece is cleared and paperwork processed, pass for exception handling
b) If Piece is not cleared and paperwork not processed, establish whether to rescan

- If sufficient time to rescan later, put aside and wait before rescanning.
- If no time to rescan later, inform Load Lead of problem

If Piece is not accepted by system:

Check if piece is at the correct reload

- If Piece is at correct position, open/create profile and inform Load Lead
- If Piece is not at correct position, transfer Piece to correct position

UNCONTROLLED DOCUMENT

UNCONTROLLED DOCUMENT

UNCONTROLLED DOCUMENT (05 DECEMBER 2024 12:47:12)

UNCONTROLLED DOCUMENT

6.11.4 Reload Piece / Handling Unit

1. **Reload Piece into Available Handling Unit**

When re-loading pieces into the original cage / ULD / FTU or pieces into a newly allocated handling unit that is readily available, carry out the following actions:

- Remove excess water and line the container base with plastic where necessary
- Check FTU/HU serviceability
- In the case of cages, check that the cage is being returned to origin

Load Piece

- Correct ULD types must be used according to type of aircraft/road vehicle to be used
- Consolidate all priority material in one ULD per destination on a given movement to facilitate ease of recovery at destination
- Build pallets according to dimensions of truck or aircraft position
- Flyers and small Pieces (i.e. smaller than the size of a coat hanger) must be consolidated in bags according to product type and not loose loaded to ULDs or trucks
- Internal mail must be put in DOX or destination bags
- Adhere to applicable sort splits
- Where possible, all multi-piece shipments should be loaded together

Ensure material that is traveling on the same T-Form is loaded in the same ULD/FTU

2. **Handling Unit Not Available**

If Cage / ULD / FTU not available take the following action as appropriate:

- Place material in preloading area
- When HU available, check handling unit condition (ULD) and perform damaged container handling if necessary
- Link HU to profile
- Load batch of Pieces in Cage/ULD/FTU
- If security check of material required, place Cage/ULD/FTU on hold. If Piece/Handling Unit requires unloading, Unload scan it

3. **Closure of Cage/ULD/FTU on System**

Prior to closing handling units on the system check that the following actions / requirements, as appropriate, have been complied with:

- If using Bagging Option, check for non-closed/loaded bags
- Close Cage/ULD/FTU on system
- Confirm positive indication

  - When non-positive destination bags are loaded to Cages / ULDs / FTUs, positive indication must be changed to "M"

  - When pieces are placed in a ULD without scanning, positive indication must be changed to “M”

- Verify flagging

  - Adhere to Standard Flagging Procedure

UNCONTROLLED DOCUMENT (05 DECEMBER 2024 12:47:12)

UNCONTROLLED DOCUMENT

- Inform Load Control of all pallets built for lower deck positions

- Determine percentage load

  - While this is only a visual check, it is very important to be as accurate as possible, using multiples of 10%

- Physically close Cage/ULD/FTU

  - Remove all old tags

  - Securely strap FTUs/HUs and protect from bad weather as per DHL AGOM **6.12.20 - ULD Weather Protection**

  - Cover aircraft pallets with plastic.

If weighing here, record weight:

- Print and attach label.

If not weighing here, pass for weighing and proceed to **6.2 - Handling Unit Weighing Procedure**

If Cage/ULD/FTU for an adjacent delivery terminal, pass to that delivery terminal.

Any held or delayed material must receive the correct checkpoint according to checkpoint business rules.

4. **Merge Cage/ULD/FTU**

If handling unit from other AHS facility, make System Entry (as appropriate):

- Take ownership of HU, Request assistance from Supervisor / Manager
- Close Cage/ULD to be merged (on system)
- Enter 'FROM[1] label
- Enter "TO' label

  - Source ULD must be closed, destination ULD open

  - Use correct profile and prefix

  - Label to be merged must have same destination or destination must be changed in the Load Control menu

  - OPS data must be filled out

UNCONTROLLED DOCUMENT

UNCONTROLLED DOCUMENT

UNCONTROLLED DOCUMENT (05 DECEMBER 2024 12:47:12)

UNCONTROLLED DOCUMENT

6.12 Freight (ULD) Build-up

The following pre-flight checks are to be made:

- Check relevant computer or loading manuals for the various aircraft types and allocations for the specific customer airline obtain print-out or flight allocation sheet
- Check print-out or flight allocation sheet and record any aircraft or flight changes as indicated from system computer or operations information.
- Ensure correct loading equipment is positioned in build up area, e.g. pallet, container, cage, truck, plastic, spreaders, nets, straps etc
- Check Flight Allocation Sheet (if applicable) for special load instructions and information

6.12.1 Retrieval of Goods

1. **General**

Goods are retrieved by the following procedure:

- A Load Tally is requested by computer input using the flight number and date. (Can only be requested by authorised personnel)
- Retrieve shipments from storage using information from the Load Tally on MAWB number and shipment storage location
- Mark each shipment retrieved by a circle around number of pieces (NOP) and record the pallet, container, cage or truck number alongside the shipment on the Load Tally
- If a consignment is split for loading, record on the Load Tally the number of pieces and weight of each split, clearly writing on the tally the relevant number of pieces and weights. If space on the tally is a problem, write 'PTO' and use reverse side

2. **Missing Consignments**

Report missing consignments (or parts thereof) to the Lead Agent for further investigation. After investigation, if found, forward, otherwise contact Operations and record on Load Tally as UTL (unable to locate). Record the Operations Agent name on load tally to whom the UTL was reported to.

Check Load Tally for specials HEA, quick transfers, priority loading, dangerous goods, bulk load, thru pallets, special tie down requirement.

Special cargo found and not marked as such on Load Tally is notified to Team Leader (or other designated authority) who will liaise with Operations to clarify.

3. **Load Tallies**

All Load Tallies must be kept, even Nil Load Tallies, and sent to Operations when finalised.

UNCONTROLLED DOCUMENT

UNCONTROLLED DOCUMENT

UNCONTROLLED DOCUMENT (05 DECEMBER 2024 12:47:12)

UNCONTROLLED DOCUMENT

6.12.2 Preparation for Loading

6.12.2.1 Check Goods

1. **Labelling**

All cargo must be clearly marked with Air waybill number and airport of destination and origin.

2. **Damaged Goods**

Report damaged or leaking goods to the Team Leader for decision on loading and damage report. Team Leader to decide in consultation with Operations, where necessary, whether to:

- Forward the goods
- Rectify the damage and forward the goods

Completion of a Damage report is required

3. **Discrepancies**

Report discrepancies on piece count to the Warehouse Supervisor / Manager, or other designated authority, for further investigation.

- If found, forward the shipment.
- If not found, contact Operations and record on Load Tally as UTL (unable to locate).

6.12.2.2 Preparation for Loading

1. **General**

Local procedures for the storage of cargo after acceptance should provide for:

- Delivered cargo and ULDs shall be visually inspected and checked for accuracy of the correct cargo.
- Security in all aspects, reducing to a minimum the possibilities of damage, pilferage and mishandling of all cargo.
- Possible evidence of damage/tampering shall be verified.
- Prioritize the breakdown of cargo based on the priority of the customer airline(s) product and the nature of the cargo.
- Segregation of and suitable storage facilities for special types of cargo e.g. Dangerous Goods.
- Methodical and speedy pre-loading operation whereby the entire load may be pre-assembled in accordance with local requirements.

Special cargo breakdown is usually treated as follows:

- Dangerous goods moved into storage area–segregation maintained, as applicable.
- Live animals moved into storage are appropriate for the animal type, in accordance with the IATA Live Animal Regulations.
- Perishables moved into storage, cooler, freezer, etc. are appropriate for the type, in accordance with the Perishable Cargo Regulations.
- Pharmaceuticals moved into storage, cooler, freezer, etc. are appropriate for the type, in accordance with the Temperature Control Regulations.
- Valuable cargo moved into a secured location.

UNCONTROLLED DOCUMENT

UNCONTROLLED DOCUMENT

UNCONTROLLED DOCUMENT (05 DECEMBER 2024 12:47:12)

UNCONTROLLED DOCUMENT

2. **Bulk Cargo**

Procedures for preparing bulk cargo for loading must provide for:

- Load bulk cargo into suitable Ground Service Equipment (GSE) according to carriers' loading instruction.
- Remove all moisture from the GSE before placing cargo on/in them
- Place large/heavy pieces at the bottom
- Load light, fragile and perishable pieces on top
- Pack cargo as tightly as possible to prevent movement, but not to the point where some of the load will be crushed
- Weight or Dimension of cargo should not exceed the aircraft loading limitations
- Weight must be communicated to the manifesting/documenting department
- Segregation according to local loading instructions. Incompatible items to be segregated according to DHLAGOM **7.9 - Loading Precautions for Incompatible Loads**
- Determination of weight. **The maximum weight for a piece loaded in the bulk hold of an aircraft is 30 kg (70 lbs).** Bulk pieces exceeding 30 kg may be loaded in the bulk hold only if the flight sector has been pre-approved for shipments exceeding this weight limit and is operated by non-containerized aircraft (E.g. Cessna Caravan, ATR 42). Pre-approval shall be requested by the origin station from the relevant Regional NCG department prior to the commencement of flights expected to carry such heavy shipments. Approval may be granted by the Regional NCG department, provided the following conditions are met on the aircraft and at origin, transfer (if applicable), and destination stations:
    1. The piece weight does not exceed aircraft floor load limitations.
    2. A sufficient number of loading staff are available to safely handle the heavier piece(s).
    3. Applicable Health and Safety Regulations are adhered to.
- All instructional loading labels and markings must be observed and complied with
- Damaged or leaking shipments must not be handled/presented to the aircraft
- An assessment of a damaged shipment must be conducted to determine whether the shipment is fit for air transportation. If the shipment is not in suitable condition for flight, it shall not travel
- Where a damaged shipment is found, all concerned parties are to be informed

6.12.3 Bulk Loads

1. **Bulk Load in Cages**

On some stations Bulk Load Cages are used so that bulk loads can be dispatched to aircraft in cage units that have a pre-determined weight, enabling easier load splits at aircraft side.

Where such cages are used:

- Load cargo into cages ready for transfer to truck for departure to flight.
- Record cage numbers on Load Tally.

Heavy cargo (HEA) - 150kg (330 lbs) and over - AVI and DG must have appropriate loading and lashing materials.

For Handled Carriers variances re special cargo, refer to appropriate Load Manuals.

- Weigh the cage when loading is finished and complete the trolley tag, filling in the weight and any special handling codes.

Upon completion of the tag, remove the carbon copy and attach it to the pallet statement which is to be held at cargo for filing and attach the tag to the CMP cage.

UNCONTROLLED DOCUMENT (05 DECEMBER 2024 12:47:12)

UNCONTROLLED DOCUMENT

3. **Loose Bulk Load**

Where cages are not utilised load cargo loose onto trucks ready for departure.

Load HEA, AVI, DGR and News Film at rear of vehicle for easy access and/or first loading onto flight.

6.12.4 Palletised / Containerised Loads

1. **Qualification**

All staff involved in the build-up of ULDs **must** be instructed on these procedures and their training records noted accordingly.

When building ULDs for certain 3rd party carriers, only staff with appropriate training and qualification may sign ULD Tags. See DHLAGOM **8. Training Standards** for more information.

2. **Preparation**

Prior to loading ULDs, its serviceability must be checked in accordance with the ULD Handling standards recorded in this document. ULDs are built up only when placed on pallet dollies or on other roller-equipped loading platforms.

Proper handling of equipment is required, e.g. heavy loading tools and rollers shall not be applied directly to the ULD floor. If such tools are required, the pallet floor will be protected against damage by supporting planks.

6.12.4.1 Loading Principles

1. **Physical Load Requirements**

All shipments loaded on one ULD are bound for the same station of unloading. If possible, transfer cargo is loaded on separate ULDs to avoid sorting out at the point of unloading. All pieces of a shipment are loaded on one ULD, if possible.

Heavy and strongly packed items are placed on the bottom. They are stowed as near to the centre of the ULD as possible. Lighter items are distributed over heavy cargo. This configuration will decrease the possibility of damage and ensure that the centre of gravity of the ULD remains within the prescribed limits.

All parts of the load shall be stowed as evenly as possible on top of each other in order to prevent a slipping of the total load.

The loading area of a ULD is confirmed by the container or by the tie- down track at the edge of the pallet respectively. On pallets, the net attachment fittings shall always be kept free from load and be easily accessible.

ULDs shall be protected from the effects of weather as described in DHL AGOM **6.12.20 - ULD Weather Protection**

When not weather-proofed, every effort shall be made to keep such pallet builds away from rain or other contaminants by keeping the ULD's inside or under cover. If it is required to transport the ULD to/from the aircraft during precipitation, a sheet of plastic may be placed over the top of the ULD and removed just prior to loading onto the aircraft (not allowed for aero engines and vehicles).

When loading WET cargo, plastic sheets shall be placed on the floor of the ULD to capture are residual liquid.

UNCONTROLLED DOCUMENT (05 DECEMBER 2024 12:47:12)

UNCONTROLLED DOCUMENT

UNCONTROLLED DOCUMENT

UNCONTROLLED DOCUMENT

2. **Balance Conditions**

When placing any load into the ULDs it is essential that a balanced condition is maintained.

The location of the horizontal Centre of Gravity (CoG) for the total payload within each ULD shall not vary more than 10% from the geometric centre of the base of the ULD for the forward or aft direction, and 10 % of the width of the geometric centre of the base of the ULD for the left or right direction.

Effectively, this can be achieved if the ULD is loaded evenly using good judgement and can, therefore, be regarded as an acceptable method of achieving balanced ULDs.

3. **Placement of Loads**

The correct placement of load into any ULD is just as critical as loading loose cargo. To ensure that the integrity of any load is protected from movement during flight the precautions detailed in DHL AGOM **6.12.5 - Securing of Loads** must be observed.

4. **Structural Load Limitations and Precautions**

When placing load into ULDs the following limitations and precautions must be complied with:

- The ULD is in a serviceable condition*(See the ULD Handling part of this document)*
- It is assembled according to the dimensional and structural limitations of the ULD and the aircraft for which it is intended
- Incompatible items to be segregated
- The destination net weight tare weight and total weight are clearly marked on the ULD tag
- Any special cargo is clearly marked in the remarks box of the ULD tag.
- The position on aircraft 'box' of the ULD tag is clearly marked.
- The weight has been correctly determined
- When Restricted Commodities are contained in or on a ULD, the appropriate ULD tag shall be affixed (See DHLAGOM **7. Dangerous Goods and Exceptions Handling**)
- ULDs assembled and delivered by a shipper contains no dangerous goods

5. **Loading of ULDs equipped with an intermediate shelf**

For ULDs equipped with a shelf the shelf load limit must not be exceeded. The shelf load limit may vary for different containers and is printed on the shelf. If no information of shelf load limit is printed on the shelf or it is not readable – the load on the shelf is limited to a maximum of **2640lbs/1200kg**. Appropriate measures must be applied to ensure the load on the shelf is observed when loading the ULD

There are no tie-down points for restraining shipments onto the shelf. Heavy cargo or cargo sensitive to jolts or tilting, which require individual restraint, shall therefore never be loaded on top of the shelf.

6. **Contour of Pallet Load**

Aircraft-related limitations (compartment cross-section, door height, maximum capacities (consult Aircraft Load Manuals relating to the individual aircraft types) as well as load limitations of the unit load devices are considered accordingly for pallet loading.

After completion of pallet build-up the load is secured on the pallet by the pallet net or straps respectively. Do not apply too much tension to the nets/straps. Too much tension to the net/straps may lift the pallet edge and the pallets then cannot be locked when loaded into the aircraft and will result in the pallet being off-loaded.

Pallet loads are shaped to conform to the compartment cross-section. The adherence to the contour is

UNCONTROLLED DOCUMENT (05 DECEMBER 2024 12:47:12)

UNCONTROLLED DOCUMENT

guaranteed if respective containers/igloos or respective pallet contour frames are used.

7. **Containers**

For containers with flexible doors, it is important that the doors put on the roof shall be secured against falling down.

When filling containers, especially when loading heavy items, handling is carried out with utmost care in order to avoid damage.

After completion of loading, the container doors are closed and locked. In case of flexible doors each strut is checked for correct fitting in the lock.

6.12.5 Securing of Loads

1. **Load Restraint Requirement**

Loads onboard an aircraft may be subjected to the following forces:

Force	Definition
Forward	Horizontal forces during landing, steep angles of descent and turbulence
Backward	Horizontal forces during take-off, steep angles of climb and turbulence
Right	Horizontal forces during turning and turbulence
Left	Horizontal forces during turning and turbulence
Up / Down	Vertical forces during landing and heavy turbulence in flight

Depending on the flight situation, these forces may exceed 1G

All loads must be secured to withstand the forces as follows:

Force	Secure to
Forward	1.5G or 9G*
Backward	1.5G or 9G*
Right	1.5G
Left	1.5G
Up / Down	3G

* The foremost ULD(s) on the Main-deck may need to be secured to 9G. If this cannot be achieved by the cargo restraining system or bulkhead, additional lashing must be employed.

*Piercing Cargo shall be secured to 9G (FWD & AFT) when loaded in flight direction. See DHLAGOM **6.12.5.2 - Lashing Techniques** (point 6 for full details)

2. **Primary vs Secondary Restraint**

A distinction shall be made between ‘primary’ and ‘secondary’ restraint as follows:

Primary restraint

The outermost restraint mechanism at a ULD level which is designed to restrain the load against movement and/or deformation when subjected to the G-forces outlined in **6.12.5 - Securing of Loads** (Point 1).

Primary Restraint shall be applied to all ULD builds prior to loading on any mode of transportation e.g. aircraft. The capacity of the Primary Restraint shall be defined as follows:

- The maximum Gross weight of the structural ULD

UNCONTROLLED DOCUMENT (05 DECEMBER 2024 12:47:12)

UNCONTROLLED DOCUMENT

- The maximum Gross weight of the pallet when used in combination with the certified pallet net.
- The number of straps used when subjected to G forces as outlined in DHL AGOM **6.12.5 - Securing of Loads** (Point 1).

Examples of Primary Restraint include: The structural shell of a container, a pallet net or certified straps (when not used in conjunction with a pallet net).

> Certified straps shall not be used as a primary restraint for palletized loads on 'N' registered (US operated) aircraft, except for aircraft engines, vehicles, or any Special Loads for which a Special Loads Tie-down Plan has been provided by the operator (See Point 5).

Secondary Restraint

Often referred to as 'Load Stabilisers', Secondary Restraint refers to any method used to secure a load against movement when used in conjunction with the primary restraint. Secondary Restraint does not need to restrain against the G-forces outlined in DHL AGOM **6.12.5.2 - Lashing Techniques** (Point 1) but is used as a means to enhance load stability and/or assist during the build-up process.

Examples of Secondary Restraint include: Straps used inside a structural ULD, straps used to secure the load on a pallet when used in conjunction with a certified pallet net.

Where a secondary restraint is used, the secondary restraint shall always be applied to the build-up underneath the primary restraint. Straps may never be applied over a certified pallet net.

2.1 **Pallet Contouring**

Contour strapping of the pallet net is not allowed.

Where straps are used in conjunction with a pallet net, straps shall only be placed underneath the pallet net in order to stabilise the build-up. The pallet net is still the Primary Restraint (see DHL AGOM **6.12.5 - Securing of Loads** , Point 2).

3. **Lashing Equipment and Lashing Rings**

DHL Stations shall ensure that only lashing equipment meeting the restraint requirements as stated be used. Equipment, which meets the requirements of other operators for whom DHL provide handling, may also be used. If such equipment is not available, the operator should provide it on request.

Lashing equipment and lashing rings (except for standard pallet restraint equipment, compartment nets forming part of the aircraft standard equipment, ropes and webbing) must be permanently marked with the breaking strength in kg or lbs.

Only equipment for which a definite breaking strength can be ascertained shall be used.

4. **Use of Certified Straps**

In all cases where straps are used as primary restraint, they shall be certified as per ETSO/TSO C172 and shall be serviceable.

For more information on ETSO/TSO C172 certified straps, and non-certified straps, see DHL AGOM **6.27.2.1 - ETSO/TSO C172 Certified Straps**.

UNCONTROLLED DOCUMENT (05 DECEMBER 2024 12:47:12)

UNCONTROLLED DOCUMENT

5. **Special Loads and Special Loads Tie-Down Plans**

Special cargo loads shall follow customer airline instructions, if any. Operators of certain 'N' registered (US operated) aircraft types will require a Special Loads tie-down plan to be created (by the operator) and implemented (under the supervision of the relevant Load Master) for any shipment which meets the following criteria:

- Where only straps are used as the primary means of restraint (See **6.12.5 - Securing of Loads**, point 2)
- Where the shipment weight exceeds a specified limit.

See the individual technical operator entries in DHL AGOM for full details on requirements of Special Loads and the procedure for requesting and implementing the tie-down plan.

6. **Raising of Freight**

Pallet edge rails may never be obstructed with cargo. If the cargo does not fit within the pallet edge rails, it must be raised.

Another reason to raise pieces of cargo, is to make them fit on a lower deck pallet with an overhang over the pallet edges.

When raising cargo is required apply spreader material, either spreader boards or wooden pallets that have undergone insecticide treatment.

If wooden pallets are used, preferably use those with both top and bottom planks to increase the surface contact and ensure that the blocks of the wooden pallets are right on top of each other, to withstand high pressure.

Note: the strength of the top planks of any wooden pallet is unknown.

They may easily break under the weight of the load or during transport under increased g-forces. The load becomes unstable if planks get broken.

In the worst-case scenario, the load may lean against the aircraft wall and damage its inside.

If the load overhangs the pallet in one or more directions:

- Flag the cargo as Overlap (OVL);
- Keep the pallet edge rail at a minimum height of 10cm;
- Apply raising materials to make the fixation of tie-down fittings possible, and to prevent blocking of the pallet locks inside the aircraft.

UNCONTROLLED DOCUMENT (05 DECEMBER 2024 12:47:12)

UNCONTROLLED DOCUMENT

6.12.5.1 Standard Capacity of Lashing Equipment

Observe the following limits for DHL Lashing Equipment:

	Standard Capacity in KG (and pounds)		
Description	At 1.5G	At 3.0G	At 9.0G
Single Stud Fitting	**700 (**1540)	**350** (770)	
Double Stud Fitting	**1400** (3080)	**700** (1540)	
Strap	**2250** (4960)	**1125** (2480)	**375** (825)
9G Spider Net			**1000** (2200)**
Pallet Net	Max. gross weight of pallet*		

* A pallet net is only able to withstand G loads when fully extended, or if the pallet net has been shortened using the certified hooks already attached to the net, and that the number of hooks used is equal to the number of studs attaching the net to the pallet. Hooks must be placed directly above the studs.

If a pallet net has been shortened using any other method, straps shall be used to secure the shipment(s) loaded on the pallet if their weight exceeds 150 kg (330 lbs)

** The maximum capacity of a spider net depends on the number of straps used, e.g. a spider net with one (1) strap at 9G has a capacity of 375 kg (825 lbs).



Special attention must be paid to the maximum certified restraining capacity of straps, spider nets and stud fittings used to secure loads, particularly when using equipment of other operators, which may have different capacities than DHL equipment.

Note:

A limited number of Spider nets are available in the DHL network. If no Spider Net is available to restrain pipes and bars, alternative methods must be employed to secure pipes and bars to the required 9G specification, e.g. by using wooden boards of sufficient quality to withstand 9G loads.

UNCONTROLLED DOCUMENT

UNCONTROLLED DOCUMENT

UNCONTROLLED DOCUMENT (05 DECEMBER 2024 12:47:12)

UNCONTROLLED DOCUMENT

6.12.5.2 Lashing Techniques

1. **Embraced Lashing**

Lashing from one tie-down attachment point over or around the cargo to another tie-down attachment point



Example of Embraced Lashing

2. **Direct Lashing**

Lashing directly from one tie-down attachment point to the cargo



Example of Direct Lashing

Note: If direct lashing is used, the **capacity of a strap shall be reduced by 50%**

UNCONTROLLED DOCUMENT

UNCONTROLLED DOCUMENT

UNCONTROLLED DOCUMENT (05 DECEMBER 2024 12:47:12)

UNCONTROLLED DOCUMENT

3. **Standard Lashing Procedure**

The following picture illustrates Standard Lashing of a normal shaped load*.

6 Straps and (minimum) 1 Security Rope per direction have been used as follows:

- 2 Straps to secure the Upward force
- 1 Strap to secure the Forward force
- 1 Strap to secure the Backward force
- 1 Strap to secure the Left force
- 1 Strap to secure the Right force
- 1 Security Rope to prevent the Forward and Backward force Straps from slipping
- 1 Security Rope to prevent the Left and Right force Straps from slipping

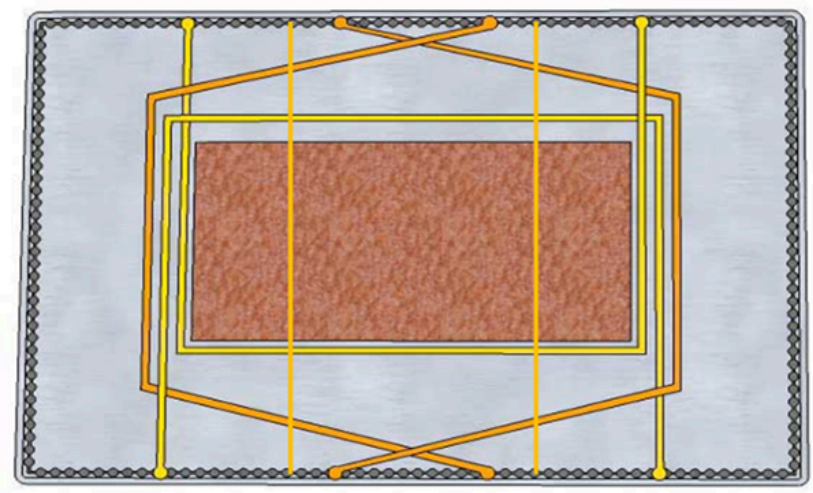

Example of Standard Lashing

***Note:** The exact number of straps required is calculated by dividing the weight of the piece by the capacity of the strap. The capacity of the strap is determined by the manafacturer and changes depending on the force the piece is restrained against. See **6.12.5 - Securing of Loads** for full details

As a minimum, the UP / DOWN force shall be restrained by a minimum of two straps, regardless of the weight. If the calculation requires more than two straps to be used, then this higher number shall be applied.

Strap Spacing

The Spacing between the restraint strap attachment fittings must meet the following criteria:

- The distance from the corner of the pallet to the first cargo restraint strap fitting shall be greater than or equal to **40cm** (16in) on each side of the pallet.
- The remaining attachment fittings of restraint straps shall be spaced equally and symmetrically along each side of the pallet.
- Attachment fittings of straps restraining in the same direction shall be approximately **50cm** (20in) apart on each side of the pallet.
- Attackment fittings of straps restraining in different directions may be next to each other.

UNCONTROLLED DOCUMENT (05 DECEMBER 2024 12:47:12)

UNCONTROLLED DOCUMENT

Example diagram of tie-down attachment spacing when restraining in the same direction:

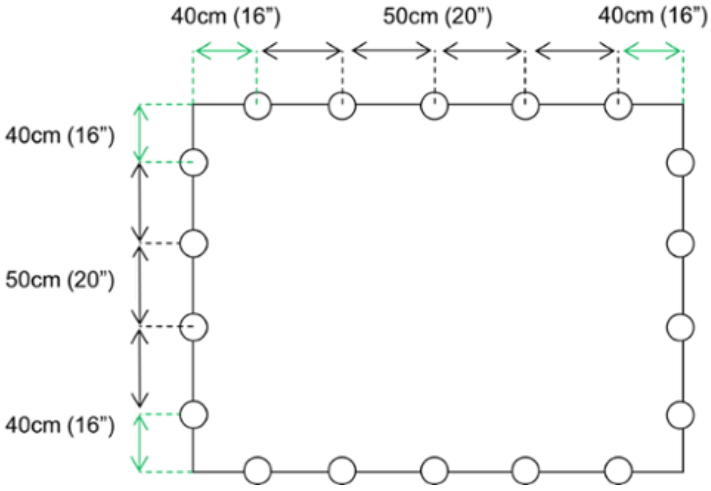

Exceptions to the distance between adjacent strap fittings and between the corner of the pallet and the strap exist for certain positions on B747-400F and B747-8F aircraft:

Pallet Base	Aircraft	Position	Side of pallet	Distance between adjacent strap fittings +/- 8cm (3in)	Distance from pallet corner to first strap fitting on rail +/- 8cm (3in)
A (88")	B747-400F	All LD; A1, A2, B1, A, B & T on MD	Short Rail	55cm (22in)	28cm (11in)
	B747-8F	A1, A2, B1 & X on MD	Long Rail	66cm (26in)	27cm (10.5in)
M (96")	B747-400F	All LD; A1, A2, B1, A, B & T on MD	Short Rail	55cm (22in)	38cm (15in)
	B747-8F	A1, A2, B1 & X on MD	Long Rail	66cm (26in)	27cm (10.5in)

4. **Fastening of Pallet Nets**

Pallet nets shall be fastened by first attaching the net fittings to the pallet on all sides, then tightening the net through the corner ropes or equivalent features.

The spacing between the pallet net attachments must meet the following criteria:

- The pallet net attachment fittings closest to the corners shall not be more than **25cm** (10in) from said corners.
- The remaining pallet net attachment fittings shall be spaced equally and symmetrically along each side of the pallet.
- For pallets of base sizes A, B, M, N & S, pallet net attachment fittings shall be spaced **55cm** (22in) to **65cm** (26in) apart on all sides of the pallet. For pallets of base sizes G and R, pallet net attachment fittings shall be spaced **40cm** (16in) apart on all sides of the pallet.

Pallet net attachment fittings shall never be forced into the pallet edge rails. They are designed and manufactured to fit easily and forcing them into the rails may make it impossible to disengage the fittings when required.

UNCONTROLLED DOCUMENT (05 DECEMBER 2024 12:47:12)

UNCONTROLLED DOCUMENT

5. **Tall Rigid Loads**

Tall Rigid loads (rigid loads of a height greater than 96” or loads where the height is twice the size of the width) shall be restrained as per the Standard Lashing Procedure detailed in **6.12.5.2 - Lashing Techniques** (point 3).

When strapping a Tall Rigid load, ensure that the straps are place higher than two thirds of the height of the load to minimize the risk of tipping.

UNCONTROLLED DOCUMENT

UNCONTROLLED DOCUMENT

UNCONTROLLED DOCUMENT (05 DECEMBER 2024 12:47:12)

UNCONTROLLED DOCUMENT

6. **Securing of Barrels (including Drums and similarly cylindrical objects)**

Barrels shall be loaded vertically and, where possible, shall be loaded into the ULD as the first layer of the build.

Barrels shall be secured against FWD/AFT, LEFT/RIGHT and UP/DOWN forces (to 1.5G, 1.5G and 3G respectively) when straps are used as the primary means of restraint i.e. loaded on a pallet without using the pallet net.

When straps are used as the primary means of restraint, a minimum of six straps shall be used to secure against all forces previously mentioned. The exact number of straps required shall be determined by the weight of the barrel plus the weight of any spreaders used in the build-up process (see **6.12.5 - Securing of Loads** & **6.12.5.1 - Standard Capacity of Lashing Equipment**).

If the pallet net is used as the primary means of restraint, straps may be required under the pallet net to ensure load stability.

Spreader Boards shall be used underneath the barrel as part of the build-up process.

Every effort shall be made to avoid stacking barrels; however, if it is required to stack barrels, a suitable layer of wooden dunnage (i.e. long / short boards or wooden pallets) shall be used to ensure build stability.

When stacking barrels, the overall weight of the stack shall be taken into consideration when calculating the number of spreader boards required.

Due to the difficulty in lashing barrels, supporting planks should be used on top as shown on the drawing below:

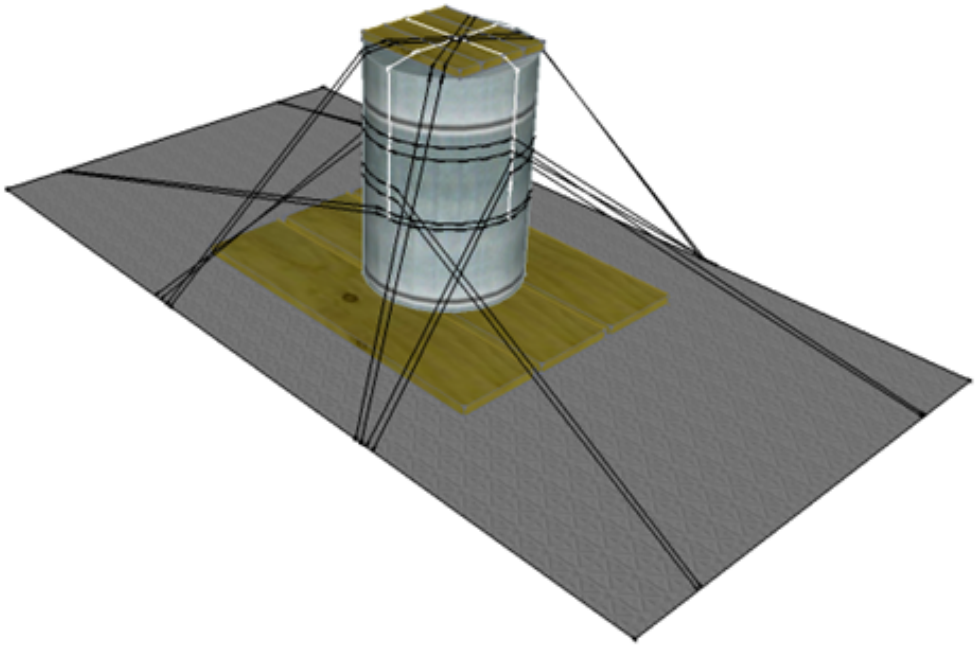

Example of Barrel Lashing (side view)

UNCONTROLLED DOCUMENT

UNCONTROLLED DOCUMENT

UNCONTROLLED DOCUMENT (05 DECEMBER 2024 12:47:12)

UNCONTROLLED DOCUMENT

Note: Straps are clear for illustrative purposes only.

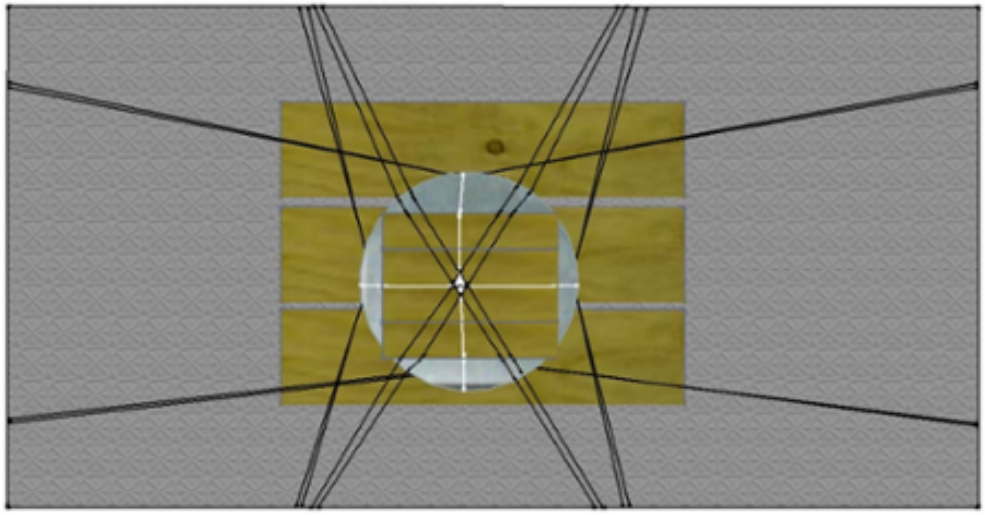

Example of Barrel Lashing (top down view)

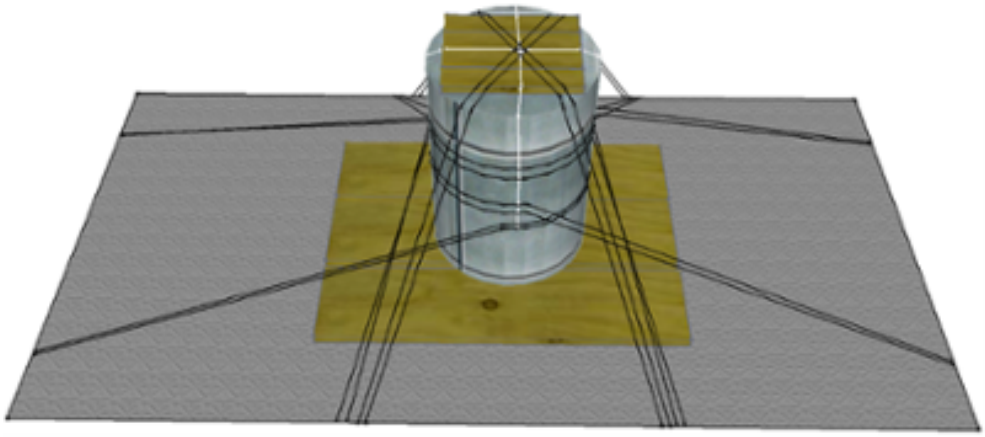

Example of Barrel Lashing (side view)

Note: Straps are clear for illustrative purposes only.

UNCONTROLLED DOCUMENT

UNCONTROLLED DOCUMENT

UNCONTROLLED DOCUMENT (05 DECEMBER 2024 12:47:12)

UNCONTROLLED DOCUMENT

7. **Lashing of Piercing Cargo (Pipes, bars poles etc.)**

Piercing Cargo (pipes, bars, poles or other long thin, objects) should ideally be loaded lateral to flight direction. If loaded in flight direction, piercing cargo shall be secured against FWD/AFT forces by Spider Nets and Straps to a capacity of 9G. If no Spider Nets are available, alternative methods must be employed to secure the pipes and bars to the 9G requirement.

In addition to securing against the FWD/AFT forces, Piercing Cargo shall be secured against LEFT/RIGHT and UP/DOWN forces (to 1.5G and 3G respectively) when straps are used as the primary means of restraint i.e. loaded on a pallet without using the pallet net.

Spreader boards shall be used to comply with the Maximum Floor Load Capacity requirement. Spreader boards shall also be used to ensure that the piece has a minimum height clearance of 8cm from the base pallet.

Chocks or other stabilising devices shall be used to ensure the piece remains stable during handling.

An example of how the build-up of a pipe should look can be found in the diagrams below. Note – The actual number of straps required will be determined by the weight of the piece plus the weight of the spreaders used (see DHL AGOM **6.12.5 - Securing of Loads** & **6.12.5.1 - Standard Capacity of Lashing Equipment**

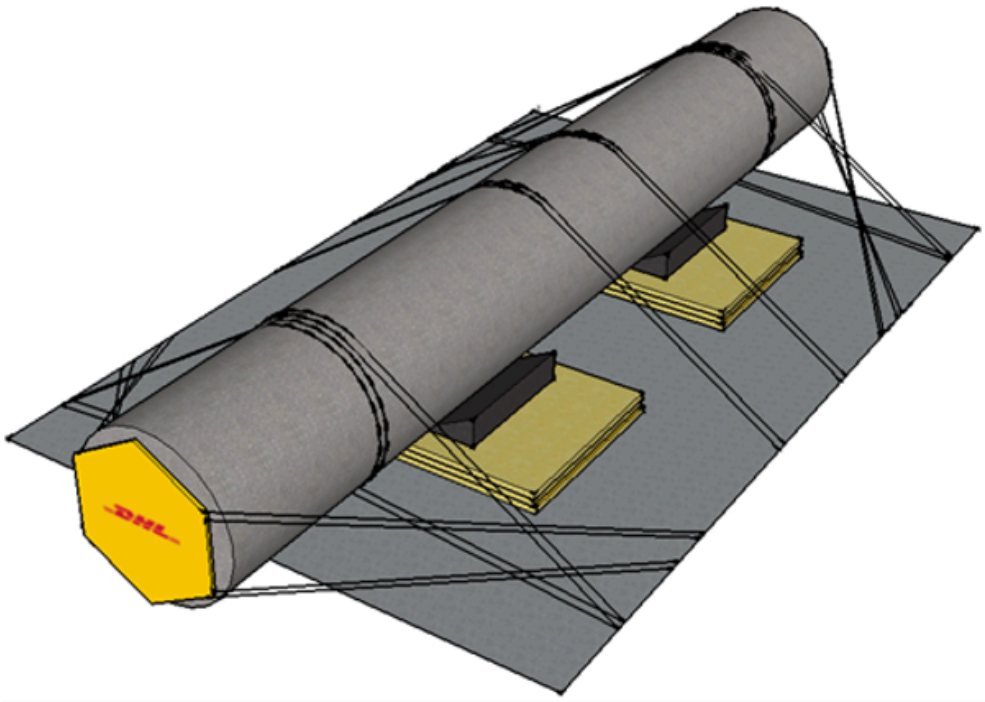

Example of pipe lashing (side view)

UNCONTROLLED DOCUMENT

UNCONTROLLED DOCUMENT

UNCONTROLLED DOCUMENT (05 DECEMBER 2024 12:47:12)

UNCONTROLLED DOCUMENT

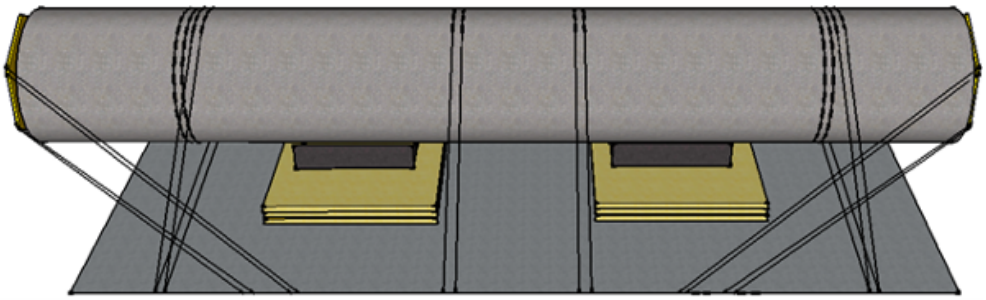

Example of pipe lashing (side view)

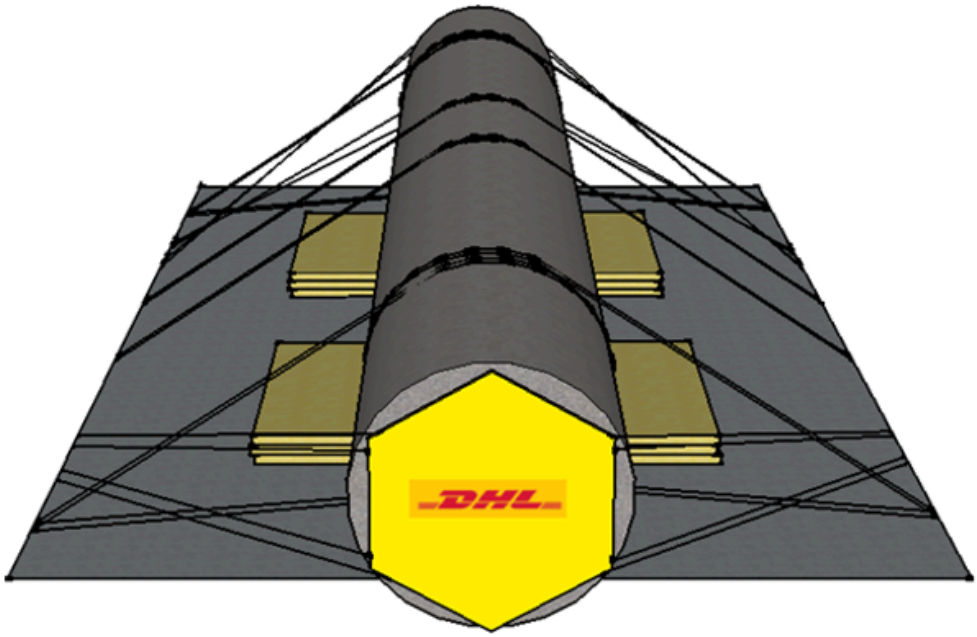

Example of pipe lashing (front view)

Note: straps are clear for illustrative purposes only.

UNCONTROLLED DOCUMENT

UNCONTROLLED DOCUMENT

UNCONTROLLED DOCUMENT (05 DECEMBER 2024 12:47:12)

UNCONTROLLED DOCUMENT

6.12.5.3 Securing of Loads inside Containers

To ensure a stable build whilst optimising the available space, the following 8 steps shall be followed when loading cargo inside a container:

1. ULD must be checked for serviceability (See **6.24.3 - ULD Inspection**).
2. Prepare the container by cleansing of debris and protecting from wetness.
3. Start the load by placing a good, solid ‘corner stone’ box in the rear left-hand corner.
4. Build one row at a time, all the way to the top of the container.
5. Use T-stacking (brick-layer method) throughout the build to ensure stability.
6. Maintain a flat surface along the front and top of the rows.
7. Use ‘filler freight’ (small packages) to fill any gaps during the build process.
8. Place bagged and time definite material in last, preferably on the top of the last row.

The majority of containers in the DHL network contain tie-down track segments on all 4 sides of the interior base which can be used for internal lashing of cargo if required.

Internal lashing of cargo inside containers shall be used to secure:

- Heavy shipments – HEA (≥150kg) OR cargo which is sensitive to jolts and tilting if the container is filled less than 75% volumetrically

Dangerous goods shipments, and other shipments within containers containing Dangerous Goods, shall always be secured against movement. Even if a container is flagged as 100% volumetrically full, additional restraint may be required to secure such shipments to ensure they do not move during transport. If straps, or an internal net (see **6.12.5.4 - Securing of Container Loads using Internal Net**) cannot be used to secure such shipments, the recommended best practice is to utilize the DHL approved cardboard available via the e-shop. When used, the cardboard shall be secured through the use of security rope or straps. Care shall be taken to ensure any strapping is not applied so tight that it damages the shipments or cardboard.

For further details on securing of Dangerous Goods see DHLAGOM **7.7.1 - Loading Onboard Aircraft**

UNCONTROLLED DOCUMENT

UNCONTROLLED DOCUMENT

UNCONTROLLED DOCUMENT (05 DECEMBER 2024 12:47:12)

UNCONTROLLED DOCUMENT

UNCONTROLLED DOCUMENT

UNCONTROLLED DOCUMENT

6.12.5.4 Securing of Container Loads using Internal Net

New types of ULDs are being introduced into the network which are fitted with an internal net, intended to secure shipments from movement inside the container during transport.

Where an internal net is available and serviceable, it shall be used regardless of the volumetric fill of the container.

The internal net **shall not** replace the requirement to use internal lashing (using straps) of HEA pieces (≥150kg) in containers less than 75% volumetrically full.

Step 1:

- ULD net will be fixed in the storage position at the back on the ULD when not in use.

Step 2:

- As shipments are placed in the ULD, the ULD net is unhooked from the back of the ULD and rested along the built wall of shipments.
- As each wall of shipments is built, the ULD net is 'walked' forward so it is always accessible to the person building the ULD.
- It is important that the ULD net is walked forward as the ULD is built – otherwise the ULD net is not accessible without climbing onto or over the shipments.

Step 3:

- When the ULD has been built and levelled off, the ULD net should be located at the front of the ULD on top off the last row of shipments built to the ULD.
- The ULD net is now ready to be fixed in place to the seat track in the doorway of the ULD.

Note – there are no double stud fittings at the sides of the ULD net.

Step 4:

- The ULD net is fitted with double studs on the front edge of the net which should be placed evenly and locked into place on the seat track in the doorway of the ULD such that the net covers the entire width of the loaded shipments.
- Once the double studs have been securely fitted to the ULD seat track, the net hooks can be set in place to gather any excess net and to also tension the ULD net to prevent shipments changing orientation during transit.
- Once the ULD net has been secured in place and tension applied, the door cover of the ULD can be closed without interference from the ULD net.

Note: Double studs of the ULD net may need to be moved if they interfere with the placement of the double stud of the ULD door cover on the ULD seat track.

Note: A full guide detailing how to deploy the internal container net is available in the Document Library available on Web Manuals (after Login).

UNCONTROLLED DOCUMENT (05 DECEMBER 2024 12:47:12)

UNCONTROLLED DOCUMENT

6.12.5.4.1 Securing of Container Loads Decision Matrix

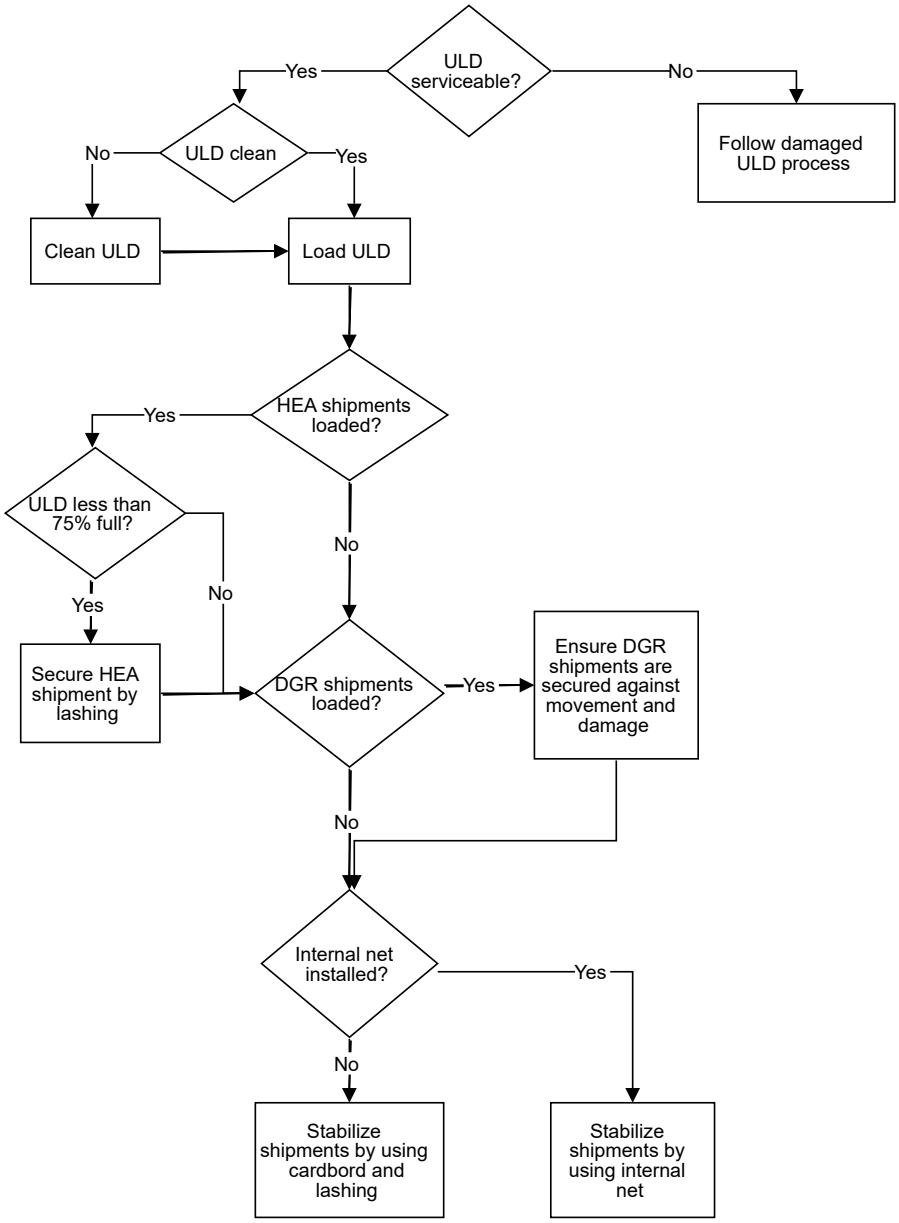

UNCONTROLLED DOCUMENT

UNCONTROLLED DOCUMENT

UNCONTROLLED DOCUMENT (05 DECEMBER 2024 12:47:12)

UNCONTROLLED DOCUMENT

6.12.6 Area Load Limitations

The hold area load limitation, expressed in kg/m2 (lb/ft2), is to prevent the weight of the load (expressed in kg or lb) resting upon a certain area of the compartment floor (expressed in m2 or ft2) to exceed the capability of the aircraft structure underneath the floor (beams, cross-beams, attachments to the aircraft body).

The Hold area load limit is provided by the aircraft manufacturer in the appropriate chapter of the Weight and Balance Manual. It is generally referred to as the "Uniformly Distributed Floor Loading" or "Maximum Distributed Load".

If it is stated that the area load limit is 2000 kg/m2 this means that on 1 m2 of the floor, not more than a total amount of 2000 kg may be loaded, with one or several pieces of cargo, and **irrespective** of the way the piece(s) of cargo are in contact with the floor within the square meter concerned.

In practice the area load limitation shall be checked dividing the weight of the piece of cargo by the area defined by the external contour of its contact point with the floor.

1. **Example of calculating actual contact area**

To calculate the actual contact area

- Multiply the number of contact points with their contact point area

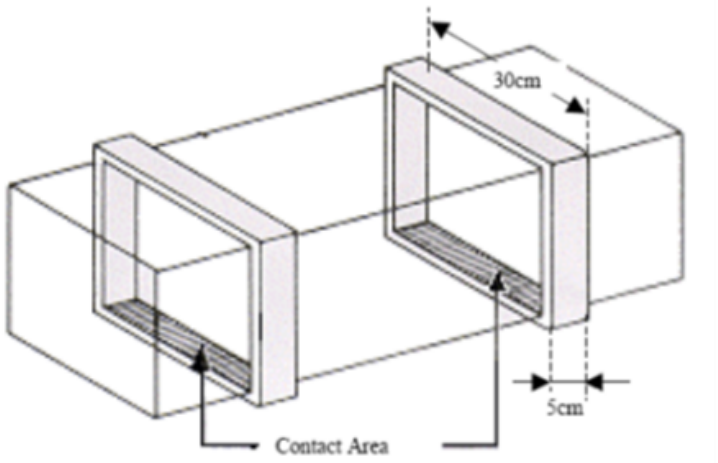

Actual Contact Area

0.3m x 0.05 m x 2 battens = 0.03 m2

2. **Example of calculating actual contact load**

To calculate the actual contact load

- Divide the weight of piece by the contact area:

Actual Contact Load:

480/0.03 = 16.000 kg

UNCONTROLLED DOCUMENT (05 DECEMBER 2024 12:47:13)

UNCONTROLLED DOCUMENT

6.12.6.1 Spreaders

All spreading equipment shall meet these requirements:

- It shall possess a sufficient degree of stiffness to effectively accomplish the load transfer, this degree of stiffness will be dictated by the weight of the load and the length of the spreader projecting beyond or within each actual contact point of the package with the spreader floor
- The resulting area, defined by the external contour of the contact points of the spreader floor, shall distribute the load below or up to the maximum permitted area load

6.12.6.2 Standard Spreading Equipment

DHL utilises the following standard spreading equipment

	Length (cm)	Width (cm)	Thickness (cm)	Area (m2)	Weight (kg)	Max. ULD Weight (kg)	Max. Loose Load Weight
Long Plank	150	15	2.7	0.225	4	446	0.225 * Aircraft Max. Floor Contact Load
Short Board	125	75	2.5	0.9375	14.5	1860	0.9375 * Aircraft Max. Floor Contact Load
Long Board	200	75	2.5	1.5	23.5	2975	1.5 * Aircraft Max. Floor Contact Load

UNCONTROLLED DOCUMENT

UNCONTROLLED DOCUMENT

UNCONTROLLED DOCUMENT (05 DECEMBER 2024 12:47:13)

UNCONTROLLED DOCUMENT

6.12.6.3 Usage of Spreaders

If the resulting figure of the calculation showed above in 109.6 Section 1 and 2 is higher than the limitation, the load cannot be accepted as it is. It will be necessary to provide a spreader floor under the load.

The **standard** maximum floor contact load limitations are as follows:

ULD Loading	Bulk Loading
2000 kg/m2	730 kg/m2

Note:

The actual floor contact load limitations may differ from aircraft type to aircraft type. Check DHL AGOM Aircraft Technical Specifications documents for actual limits.

To determine the contact area required, the following calculation is made:

- Divide the weight of the piece of cargo by the hold area load limit

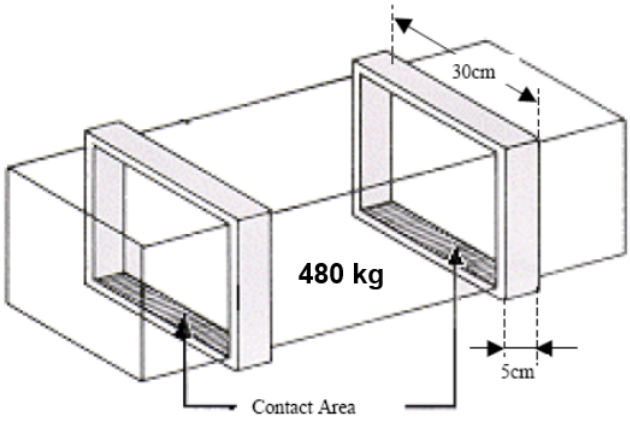

UNCONTROLLED DOCUMENT

UNCONTROLLED DOCUMENT

UNCONTROLLED DOCUMENT (05 DECEMBER 2024 12:47:13)

UNCONTROLLED DOCUMENT

2. **Example of calculating contact area required – ULD Loading**

Contact Area Required

480/2000 = 0.24 m2

To ensure the contact area after spreading is sufficient the following calculation can be made:

- Multiply the number of contact points with their contact point area

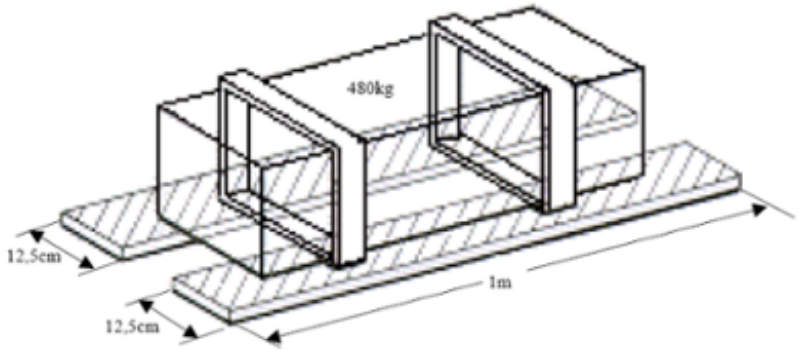

2. **Example of calculating spreader contact surface**

As described above, the minimum contact surface required in this example is 0.24 m2

Actual Spreader Surface

1m x 0.125m x 2 = 0.25 m2

UNCONTROLLED DOCUMENT

UNCONTROLLED DOCUMENT

UNCONTROLLED DOCUMENT (05 DECEMBER 2024 12:47:13)

UNCONTROLLED DOCUMENT

6.12.6.4 Point Load Limitation

It defines the resistance to puncture (by a heavy bearing onto a very small surface area) to the material used in a bulk hold floor. It is equivalent to pressure and is expressed in kg/m2 (lb/in2).

In practice the concentrated load limit of hold floors is very high; normally handled packages do not reach that limit. That is why the point load limitation is not mentioned in the manuals of the aircraft manufacturer.

It is a requirement, however, that staff apply the elementary package handling precautions, indicated hereafter, in order to avoid a floor puncture by a point load during handling in a bulk hold.

During handling never lay a heavy (more than 50 kg/110 lbs) package on one corner or drop a heavy on an edge or a corner; the impact might result in puncture.

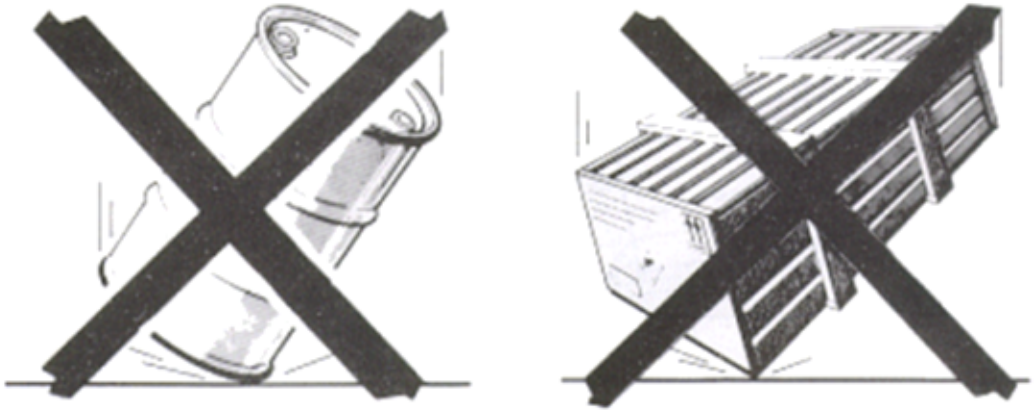

UNCONTROLLED DOCUMENT

UNCONTROLLED DOCUMENT

UNCONTROLLED DOCUMENT (05 DECEMBER 2024 12:47:13)

UNCONTROLLED DOCUMENT

6.12.7 Loading of Aircraft Engines

1. **Engine build-up principles**

Aircraft engines tendered for transport shall be presented by the shipper on a specially designed engine transport stand.

For 'N' registered (US operated) aircraft, Special Loads regulations apply. Check the DHL AGOM Aircraft Technical Specifications documents for details concerning the transportation of Special Loads prior to securing of the engine.

Please ensure that the engine transport stand is designed and approved for air transport prior to uplift.

Aircraft engines shall be built-up in preparation for air transport in accordance with the following principles:

- Generally, a 16ft or 20ft pallet shall be used for the transportation of aircraft engines, however, certain models may be transported on smaller pallets on the assumption that all other build-up criteria are met.
- Aircraft engines shall be secured to the transport stand by the shipper, not by DHL or any sub-contracted ground handling agent.
- DHL or the responsible ground handling agent shall secure the engine transport stand to the pallet. As standard practise, a pallet net and/or straps or any other restraint devices shall never be passed over, or directly attached to, the engine. See **6.12.7 - Loading of Aircraft Engines**, point 3 for further details on exceptions for the use of pallet nets.
- The point or area load shall be decreased through the use of spreader boards (appropriate to the weight of the engine and stand combination).
- Where straps are used as primary restraint (See **6.12.5 - Securing of Loads**), straps shall be ETSO/TSO C172 Certified.
- Where available, straps shall be anchored at the specified anchor points on the engine transport stand. If dedicated attachment points are not available, the structural components of the transport stand shall be used to secure against all forces.
- Protectors shall be used to protect the straps from any sharp edges.
- If the transport stand has shock mounts, do not attach the tie-down straps against upward forces above the shock mounts, unless specified by the engine stand manufacturer.
- If this pallet is to be 'floated' in the aircraft, this shall be done only after prior notification to and approval from, the respective operator.

Note, the use of a floating position may require assistance from a Load Master therefor any agreement to use a floating position must involve Regional/Global Airside and a final decision shall be made by the operator.

2. **Use of Certified Straps**

Where straps have been used as the primary means of restraint (see **6.12.5 - Securing of Loads**) these straps shall be certified in accordance with ETSO/TSO C172. For full details on ETSO/TSO C172 certified and non-certified straps, see DHL AGOM **6.27.2.1 - ETSO/TSO C172 Certified Straps**.

UNCONTROLLED DOCUMENT (05 DECEMBER 2024 12:47:13)

UNCONTROLLED DOCUMENT

3. Use of pallet nets over Aero Engines

Whilst standard practise forbids the application of a pallet net over aero engine shipment, exceptions are becoming increasingly common due to enhanced regulatory requirements on load securing. Certain aircraft types and operators require the use of a pallet net for all pallet loads, including aero engines, in order for them to be permitted to travel on that aircraft – most notably converted B767 aircraft operating with US 'N' registrations e.g. ABX B767 aircraft.

Other 'N' registered US aircraft may require the use of a pallet net for engine securing if an approved tie-down plan is not available via the Special Loads Request process. For details on US carrier Special Loads processes, check the relevant Aircraft Technical Specifications document entry and see **6.12.5 - Securing of Loads** for general information on Special Loads.

Engines shall only be placed underneath a cargo net with the express written permission of the shipper. One copy of this confirmation shall be retained (either physically or electronically) as part of the booking paperwork and a second copy shall travel with the shipment.

If an engine has arrived at a transit station with a pallet net applied, the net shall not be removed as it may be a requirement of an operator further along the logistics chain. The pallet net shall only be removed at the final destination station of the shipment.

Pallet nets shall be applied and removed with extreme caution. Build-up shall be conducted by a colleague with prior experience in engine and/or special loads build-up, or under the supervision / guidance of an experienced colleague. Where possible, a representative from the shipper or manufacturer should be present to provide guidance on the securing of the engine and the application of the net if required.

4. Special Loads tie-down plans

Where engine stands are secured using straps as the primary means of restraint (see **6.12.5 - Securing of Loads**, point 5), a Special Loads tie-down plan may need to be created by the operator and implemented under the supervisor of the respective Load Master.

See **6.12.5 - Securing of Loads** (point 5) and the individual Aircraft Technical Specification documents for further information on Special Loads tie-down procedures.

UNCONTROLLED DOCUMENT

UNCONTROLLED DOCUMENT

UNCONTROLLED DOCUMENT (05 DECEMBER 2024 12:47:13)

UNCONTROLLED DOCUMENT

6.12.8 Loading of Vehicles

Vehicles shall be transported in such a way that the maximum floor load capacity is not exceeded and all forces are restrained. The vehicle may not be damaged in any way.

The below build-up principles apply for vehicles of standard construction weighing less than **3,600kg**, for heavier vehicles or vehicles requiring restraint by means other than the procedures detailed in this chapter, special loading instructions and/or build-up guidance may be required.

Where special build-up guidance is required, a minimum of 24 hours notice is required before any guidance can be provided. Shipments requiring special build-up procedures shall not be accepted into the network before instructions have been provided by the operator. See individual operator Aircraft Technical Specifications entries in DHL AGOM for any additional restraint requirements.

1. **Restraining to a pallet using Straps as the Primary means of Restraint**

Vehicles shall be secured by passing straps through the spokes of the wheels and around the rims, as illustrated by the drawing below.

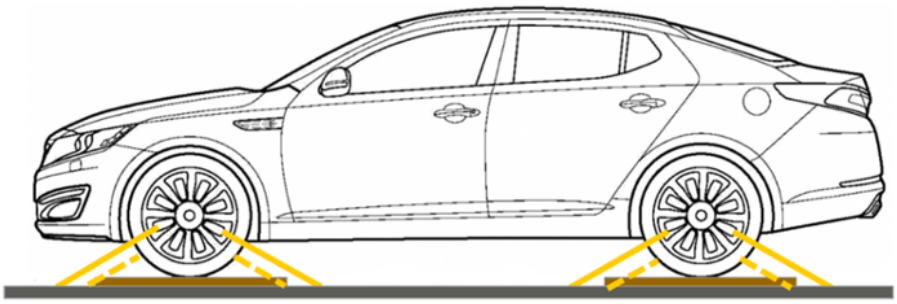

The following build-up principles shall be followed:

- Where straps are used as primary restraint (see **6.12.5 - Securing of Loads**), straps shall be ETSO/TSO C172 certified (see **6.27.2.1 - ETSO/TSO C172 Certified Straps**)
- All straps used shall be in serviceable condition and within the specified expiration date.
- As a standard, the vehicle shall be loaded on a 16ft or 20ft pallet, ensuring that the vehicle's centre of gravity is within 10% of the centre of the pallet. If the size of the vehicle allows for a smaller pallet to be used whilst meeting all other build-up criteria, the smaller pallet may be used.
- The point or area load of each wheel shall be decreased through the use of spreader boards (appropriate to the weight of the vehicle).
- Each wheel shall be restrained with one strap forward and one strap aft unless specifically instructed by the Load Master of the carrier.
- Straps shall be secured at opposing angles (FWD and AFT) so that there are an equal number opposing both FWD and AFT forces.
- The first strap attachment point shall be no less than 16"/40.64cm from the corner of the pallet.
- Strap attachments shall be evenly distributed along the length of the pallet.
- The straps shall be anchored approximately midway up the wheel.

UNCONTROLLED DOCUMENT (05 DECEMBER 2024 12:47:13)

UNCONTROLLED DOCUMENT



- Care shall be taken not to use the following as strap anchor points:
  - Suspension arms and struts
  - Brakes or brake parts
  - Steering arms
  - Shock absorbers
  - Any body parts, including skirts, spoilers and splitters
  - Any lines or hoses
  - The cabin

The use of wheel spokes as a strap anchor point shall be avoided at all times unless specifically instructed by a Load Master in order to ensure compliance with a specific tie-down plan.

If any further adjustments are required in order to comply with a specific tie-down plan, these adjustments shall be carried out by the respective operators Load Master.

2. **Restraining to a pallet using Wheel Cradles**

The wheel cradle has been designed for the transport of Bentley cars or any high value cars which do not allow strapping through the wheel rim. All standard cars should be secured using straps as per point 1.

Where a wheel cradle has been approved for use by the operator, this shall be used in accordance with operational and customer requirements.

The wheel cradle shall be applied to each wheel as per the images below.

- The DHL wheel cradle assembly comprises of five double-stud attachments.
- The assembly is placed over the top of the wheel and shall be fixed in such a way as to ensure that the wheel cradle is secured firmly down onto the wheel:
  1. Strap component 1 shall be passed over the top of the wheel and strap components 2 and 3 shall be passed either side of the wheel. Straps 4 and 5 shall be allowed to sit behind the wheel hanging either side of the wheel axle.
  2. The double-stud fitting of strap component 2 shall be attached to the left of the wheel (point 2a) and the double-stud fitting of strap component 3 shall be attached to the right of the wheel (point 3a), ensuring that the straps are at an approximate 45° angle relative to the pallet base.
  3. Strap component 1 shall come directly down from the top of the wheel and the double-stud fitting shall be attached to the pallet (point 1a) at a 90° angle relative to the pallet base.
  4. In order to ensure that the wheel cradle is secured firmly down onto the wheel, the two red straps 4 and 5 shall be passed right and left of the wheel and attached to the pallet base.
  5. Use the buckle on strap component 1 to adjust the height of the wheel cradle assembly such that strap components 2 and 3 sit above the centre point of the wheel.
  6. When applying the wheel cradle assembly, care shall be taken to avoid any damage to car brake lines or sensors. Strap component 1 shall be used to adjust strap components 2 and 3 in an upward direction. Straps 4 and 5 shall be used to adjust strap components 2 and 3 in a downward direction.
- All wheel cradle assemblies shall be in serviceable condition and shall be within the specified expiration date.

UNCONTROLLED DOCUMENT

UNCONTROLLED DOCUMENT

UNCONTROLLED DOCUMENT (05 DECEMBER 2024 12:47:13)

UNCONTROLLED DOCUMENT

- As a standard, the vehicle shall be loaded on a 16ft or 20ft pallet, ensuring that the vehicle's centre of gravity is within 10% of the centre of the pallet. If the size of the vehicle allows for a smaller pallet to be used whilst meeting all other build-up criteria, the smaller pallet may be used.
- The point or area load of each wheel shall be decreased through the use of spreader boards (appropriate to the weight of the vehicle).

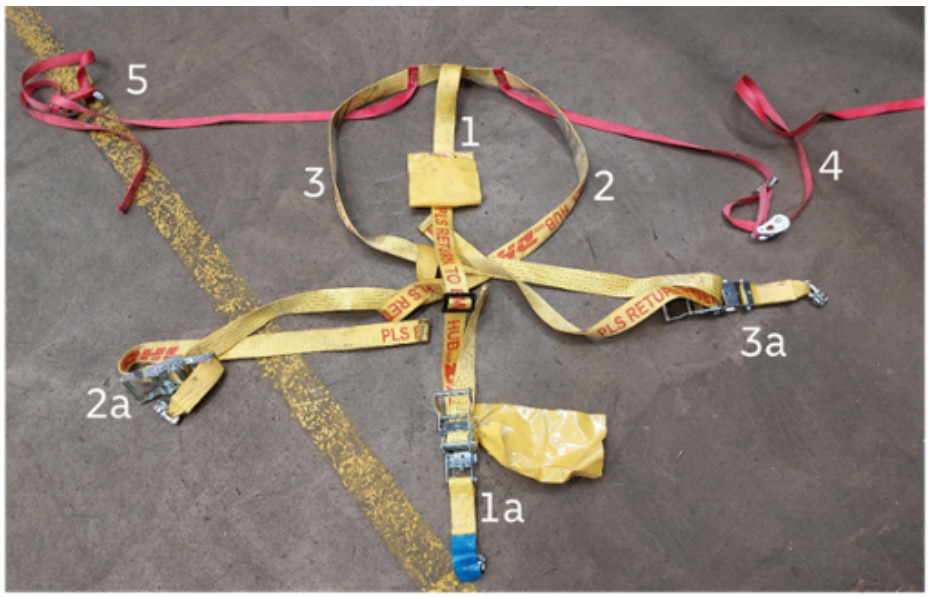

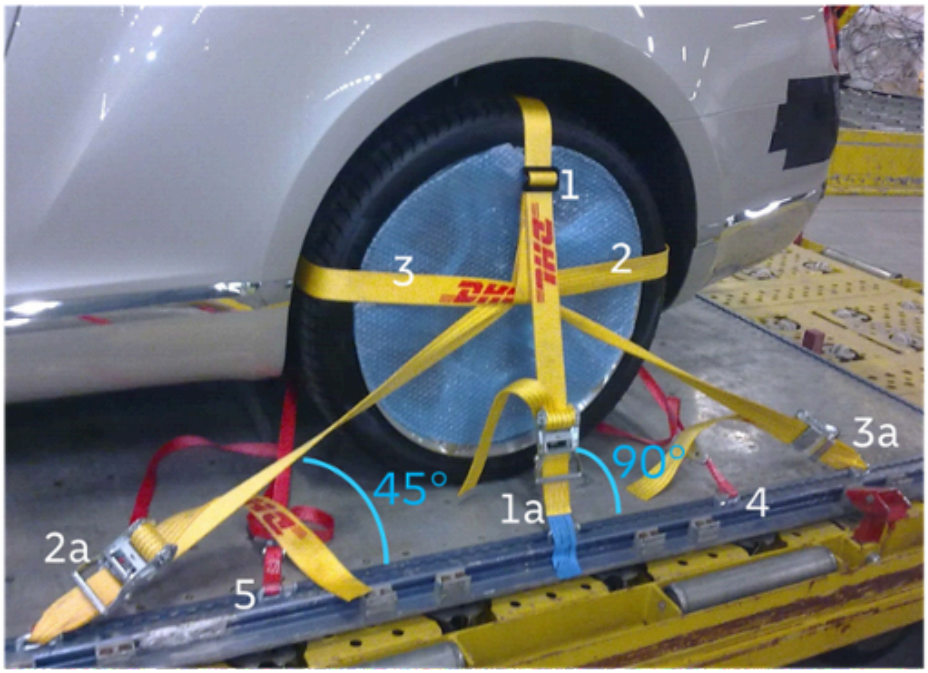

UNCONTROLLED DOCUMENT

UNCONTROLLED DOCUMENT

UNCONTROLLED DOCUMENT (05 DECEMBER 2024 12:47:13)

UNCONTROLLED DOCUMENT

If any further adjustments are required in order to comply with a specific tie-down plan, these adjustments shall be carried out by the respective operators Load Master.

Note: The use of the wheel cradle is reserved for specific vehicle transports where it is not permitted / possible to pass straps through the vehicle wheel and has been approved for use by the operator. Currently, the DHL wheel cradle assembly is not certified as per ETSO/TSO C172 and therefore may not be used as primary restraint for certain carriers. See the individual operator Aircraft Technical Specifications documents for more information on the use of wheel cradles.

A Certificate of Conformance is available for the wheel assembly if required.

Contact **globalairside@dhl.com** for further details if required.

3. **Use of Certified Straps**

Where straps have been used as the primary means of restraint (see **6.12.5 - Securing of Loads**) these straps shall be certified in accordance with ETSO/TSO C172. For full details on ETSO/TSO C172 certified and non-certified straps, see DHL AGOM **6.27.2.1 - ETSO/TSO C172 Certified Straps**

4. **Vehicles requiring special handling**

Due to certain characteristics, it may not be possible and/or appropriate to restrain vehicles using the standard strapping method as outlined in **6.12.8 - Loading of Vehicles** (point 1) or by using the wheel cradle as outlined in **6.12.8 - Loading of Vehicles** (point 2).

Vehicles which fall into this special category include:

- Vehicles weighing more than 3,600kg.
- Vehicles which cannot be secured using the standard strapping method or a wheel cradle.
- Vehicles which may be used for military purposes.

Prior to accepting such shipments into the DHL Network, the respective operators Special Loads team shall be notified in order to check that the shipment can be uplifted on the route as requested. The operator shall provide any special build-up and/or loading instructions as part of their acceptance of the shipment.

Note: A minimum of 24hours notice is required prior to uplift of any vehicles which require special assistance. For certain special loads, a specific tie-down plan will need to be developed by the operator and implemented under the supervision of the respective Load Master.

6.12.9 Loading of Metal Plates

When sharp edged steel plates are accepted for loading, procedures shall be employed to ensure the sharp edges of the steel plates does not cut through any straps used to secure the plates to a ULD.

- To protect the straps, solid cardboard or wood shall be placed between the straps and the edges of steel plates.

UNCONTROLLED DOCUMENT (05 DECEMBER 2024 12:47:13)

UNCONTROLLED DOCUMENT

6.12.10 Loading of Crated Heavy Shipments

Unrestrained heavy shipments inside crates can become damaged during transport and have the potential to destroy the crate in which they are loaded, resulting in damage to the aircraft. A heavy shipment shall be restrained inside a crate so that movement of the shipment is not possible and such that it will not damage its packaging. If a heavy shipment is not conform fit to the crate or otherwise directly restrained by the crate, the following requirements apply:

- The shipment must be secured inside the crate to withstand Forward/Aft forces to 1.5G, Left/Right forces to 1.5G and Up/Down forces to 3G.
- If straps are restrained to the floor of the crate using double stud fittings, the capacity of the straps, buckles and double stud fittings must withstand 5000 pounds of force
- If straps are restrained to the floor of the crate using single stud fittings, the capacity of the straps, buckles and single stud fittings must withstand 2000 pounds of force
- When restraining a car inside a crate, a DHL approved restraint method for cars on pallets as described in **6.12.8 - Loading of Vehicles** should be used. If these have not been used, the chosen restraint method must withstand Forward/Aft forces to 1.5G, Left/Right forces to 1.5G and Up/Down forces to 3G.
- The crate must be built strong enough so that it will not be damaged by straps applied outside the crate to restrain Forward/Aft forces to 1.5G, Left/Right forces to 1.5G and Up/Down forces to 3G on the weight of the crate and its contents.

The shipper must be able to demonstrate to DHL that heavy shipments inside a crate have been restrained per these requirements upon request.

6.12.11 Transportation of 'Nested' ULDs

It is possible to transport ULDs inside other ULDs by road or air – also known as Nesting/Nested ULDs.

Definition of terminology:

- Nested ULD (collective term for one ULD inside another ULD intended for travel)
- Parent ULD (ULD carrying Child ULD)
- Child ULD (ULD being carried by Parent ULD)

ULD's may be nested inside other ULD's providing the following requirements are met;

- All standard build-up principles shall be adhered to
- Correct ULD handling procedures shall be adhered to for both the Parent and Child ULD
- Child ULDs shall only be loaded or unloaded from the Parent ULD when the Child ULD is empty
- Child ULDs shall be loaded into the parent ULD with the top facing upwards
- If there is no weatherproofing on the base of the Parent ULD, spreaders shall be used to avoid any metal on metal contact between the base of the Child ULD and floor of the Parent ULD
- If using a forklift to load the Child ULD, extreme care shall be taken when positioning forks. The Child ULD must cover the end of the fork tines. It may be required to use spreaders underneath the Child ULD so as to allow forklift tines access to the base of the Child ULD. Alternatively, the Child ULD may be placed by hand, respecting local Health and Safety regulations.
- If the gross weight of the child ULD exceeds 150Kg (including any spreaders used underneath), the child ULD shall be secured against movement using Tie Down straps, unless the parent ULD is 100% volumetrically full

UNCONTROLLED DOCUMENT (05 DECEMBER 2024 12:47:13)

UNCONTROLLED DOCUMENT

- If the Child ULD needs to be secured, Tie Down straps **shall not** be placed over the roof of the ULD but instead should pass through its handheld straps
- Once loaded into the Parent ULD, the Child ULD may be loaded with freight **except for Dangerous Goods**
- Freight may be loaded inside the Parent ULD (outside of the Child ULD) **except for Dangerous Goods**
- Freight **shall not** be loaded on the on top of the Child ULD
- Child ULD doors/curtains must be closed before being transported by air or road
- The Child ULD Identification code must be added to the Supplementary Information (S.I) line of the Load Message (LDM)
- “ELD” shall be added to the standard flagging for the position

6.12.12 Transportation of Intermediate Bulk Containers (IBC) Containing Liquids

Intermediate Bulk Containers (IBC) are industrial-grade containers designed for the mass handling, transport, and storage of liquids.



The following general rules apply for the air transport of IBCs when carrying liquids:

- IBCs must be built of metal or hard plastic enclosed in a metal frame.
- IBCs are only allowed to be loaded on a pallet. They shall not be loaded inside a container.
- IBCs shall have a maximum volumetric capacity of 1000 litre per IBC.
- IBCs shall be filled between a minimum of 80% and a maximum of 95% of their volumetric capacity.
- IBCs shall not contain liquid Dangerous Goods.
- IBCs shall be distributed evenly on the pallet.
- A maximum of 5 IBCs shall be loaded per pallet.
- IBCs shall be secured on the pallet against movement as per **6.12.5 - Securing of Loads** and supported as per **6.12.6 - Area Load Limitations**.
- Freight shall not be loaded on top of IBCs.
- Use absorption sheets and plastic foil as required.
- Special load code/remark/flagging ‘IBC’ shall be used. This is needed for load control purposes.
- The maximum gross weight limit of an aircraft position on which IBCs are to be loaded shall be reduced by 20%.
- All locks on an aircraft position on which IBCs are to be loaded shall be serviceable.

Additional restrictions on the loading of IBC may apply; see the operating aircraft’s technical specifications chapter. The above rules apply for pallets with mixed loads of IBCs and other freight.

UNCONTROLLED DOCUMENT (05 DECEMBER 2024 12:47:13)

UNCONTROLLED DOCUMENT

6.12.13 Securing of Car Safety Boxes (DGF)



Car Safety Box (C2SB and C3SB) shall be transported on a 20 foot (PGA) pallet.

Dunnage shall be used between the PGA and the Car Safety Boxes to avoid metal-on-metal contact between the two devices.

Once the Car Safety Box has been placed onto the pallet, it shall be secured using straps to stabilise the load and a certified pallet net to secure the load. Straps should be applied in accordance with the build-up procedures documented in **6.12.5.2 - Lashing Techniques** and the net shall always be place on top of the straps.

The shipper shall ensure that items inside the Car Safety Box must be secured in such a manner that they shall not move or change orientation during transport or handling. Any load which is free to move inside the container may cause the centre of gravity to shift and cause the build-up to become unstable, posing a risk to flight safety.

UNCONTROLLED DOCUMENT

UNCONTROLLED DOCUMENT

UNCONTROLLED DOCUMENT (05 DECEMBER 2024 12:47:13)

UNCONTROLLED DOCUMENT

6.12.14 Loading Accessories

7. **Definition**

Loading Accessories are items such as spreaders and lashing equipment.

2. **Equipment Standards**

Wooden Equipment:

All wooden equipment including pallets (skids), spreader boards, packaging and other wooden articles, must conform to the International Standards for Phytosanitary Measures (ISPM 15) developed by the International Plant Protection Convention (IPPC) for all relevant countries. These guidelines regulate the use of wood packaging material used in international trade. The standards outlined in the IPPC agreement are the minimum requirements – individual countries may apply tougher restrictions that must be adhered to.

Pallets (Skids):

EUR-Pallets (also known as Euro-pallets or EPAL-pallets) are the most commonly available type of pallet within DHL. When EUR-Pallets are not used, other pallets must possess as a minimum the same capabilities. They shall comply with the following requirements:

- Be constructed using high-quality wood, such as spruce or pine or other material which have the same or better capabilities as described
- Be able to support a load of at least 1,000 kg
- Be in good condition, free from any contaminants, such as dirt, oil, or insects with all protrusions or nails properly secured

3. **Provision**

Loading accessories should normally be provided by DHL for use on company aircraft and by the respective carrier in the case of customer handled airlines.

Unless there is a special agreement between DHL and the handling company, the cost of the loading accessories may be recorded on the handling charge note or similar document and recharged accordingly.

As these items represent considerable expenditure, special attention must be given to such recharges being signed by a duly authorised representative of the DHL station or the carrier in the case of such items being provided by DHL.

4. **Identity and Return**

All loading accessories should be permanently marked with the name of the carrier owning them and remain its property. Wherever possible DHL owned accessories will be so marked.

The possibility that marked loading accessories will find their way back to their original owners shall be taken into account when assessing charges.

DHL stations should ensure that handling companies return all DHL loading accessories and that these accessories be returned to the base station by the quickest means.

Customer airlines accessories should be returned to the respective carrier on whose flight or ULD they were used in.

5. **Carriage**

When carried on board an aircraft loading accessories shall be considered as EIC and treated accordingly.

UNCONTROLLED DOCUMENT

UNCONTROLLED DOCUMENT

UNCONTROLLED DOCUMENT (05 DECEMBER 2024 12:47:13)

UNCONTROLLED DOCUMENT

6.12.15 Ballast Bags

1. **Definition**

Ballast bags are used to trim aircraft and provide additional weight in specific areas to enable an aircraft to operate within defined weight and balance safety parameters.

It is therefore essential that ballast bags are constructed to correct IATA standards in order to protect their weight integrity.

Ballast can be of alternative material as long as the weight per piece is controlled and notified. Alternatively ballast should consist of non-porous material or is fully enclosed in non-porous material

2. **Standards**

Ballast bags must be constructed to the following standards:

Weight	25 kg (55 lbs)
Contents	Only dry shingle, course round gravel or pebbles of an average diameter of 12-15 mm (0.5 – 0.75 in) must be used. **Sand shall not be used**
Material	Canvas or Hessian with an inner plastic bag effectively closed
Marking	marked with weight and name of owner

3. **Storage**

Wherever possible, ballast bags should be stored indoors. If this is not possible they shall be placed on planks and protected against the weather by means of canvas covers or other suitable covering.

Ballast bags shall periodically be checked for weight and condition.

6.12.16 Ballast ULDs

On containerized aircraft it may be necessary to ballast a ULD due to the Centre of Gravity of the empty aircraft or to meet minimum flight weight requirements. This may be in the form of empty ULDs, aircraft pallet stacks* or ULDs loaded with company material (COMAT) or ballast bags. The following conditions must be met for all ballast ULDs:

- If ballast bags are used in a ULD they must be restrained to prevent movement of the bags and spillage of the contents.
- The ULD must be inspected and ensure that it meets serviceability guidelines before being loaded on to the aircraft.
- At no time may a ULD be loaded on the aircraft if there is evidence of any spillage or evidence of damage to the ballast material being utilized.

* Aircraft pallet stacks are Rigid Cargo. See **4.5.7.8 - Crushable, Rigid and Piercing Cargo**.

UNCONTROLLED DOCUMENT (05 DECEMBER 2024 12:47:13)

UNCONTROLLED DOCUMENT

UNCONTROLLED DOCUMENT

UNCONTROLLED DOCUMENT

6.12.17 Equipment in Compartment

1. **Labelling**

Each EIC shipment must be labelled with an EIC tag as specified in except loading accessories and lashing material in use.

2. **Specification of EIC Tag**

The EIC tag shall be clearly marked EIC in black and show the following information.

- Destination and Flight Number
- Number and weight of pieces
- Remarks

3. **Marking**

Each EIC item shall be marked with the name of the carrier owning it (DHL) or other carrier if applicable, the station at which the equipment is controlled and the weight in kg

6.12.18 Pallet Stacks

In order to avoid any possibility of pallet stacks shifting during loading or in flight, spreading or dunnage must be used to raise the stack from the base pallet and must be restrained as shown below:

a) For pallet stacks from **1 up to 20 pallets** including the base pallet:

- **8 straps and 1 Pallet net**

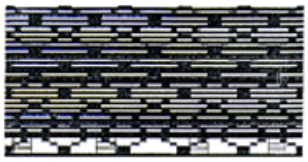

b) For **pallet stacks loaded with cargo**:
Lashing of the pallet stack according to **a)**

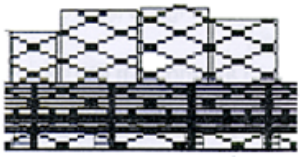

Note: Straps shall be applied before the net is placed over the top and secured.

Notes:

It is permissible to load cargo provided the cargo is loaded on top and restrained by the pallet net, which is attached to the baseplate. The weight of the baseplate, stack and cargo shall not exceed the maximum capacity of the pallet net.

Each pallet shall have a serviceable pallet net attached to one long side and stretched across the pallet before the next pallet is applied to the stack.

The stack shall be secured with 4 longitudinal + 4 lateral straps.

The net of the base pallet shall then be used to secure the entire pallet stack.

Pallet stacks shall conform to aircraft contour limits.

Pallet and net are considered as one, which means they shall always travel together, whether the net is used or not.

UNCONTROLLED DOCUMENT (05 DECEMBER 2024 12:47:13)

UNCONTROLLED DOCUMENT

6.12.19 ULD Build

Where possible load the following categories of cargo on separate units

- Through pallets for consignments to one airport of destination long haul cargo
- Local cargo and all domestic destinations at country of destination
- Transfer cargo same carrier at destination

Pallets shall be protected from the effects of weather as per **6.12.20 - ULD Weather Protection**

When loading WET cargo, plastic sheets shall be placed on the floor of the ULD to capture are residual liquid.

In severe precipitation, an extra layer of plastic sheeting must be placed over ULDs and removed just prior to loading to ensure the ULD and load are as dry as possible before entering the aircraft.

DG CAO cargo loaded on cargo aircraft only, as specified on individual aircraft types.

Always check Compatibility Charts when loading DG, e.g. some CAO DGR can be loaded in different positions, e.g. RMD, RPB, RRY, RRW and RFL Cat III.

- The Team Leader or Supervisor loading Radioactive Material shipments must complete the loaded section of the RADAC Check-sheet.

6.12.19.1 ULD Completion

When pallet/container is closed for further loading, e.g. full, no more cargo or no more time, mark on Load Tally as closed, weigh the whole unit, record onto Pallet Weight Statement and produce a manual ULD Tag (See **6.22 - Appendices** A. Manual ULD Tag) or a locally produced electronic version containing the same information.

Damaged or leaking freight must not be loaded until the Team Leader decides rectify the damage and forward the goods, or complete a Cargo Damage Report.

Enter details of pallets/containers for flights into the computer

Notes:

Dangerous Goods or leaking cargo that poses a risk of contamination to other load must not be loaded

When Load Tally is finalised, Agent adds name and works / reference number and send immediately to Operations.

Repeat Load Tally procedure as necessary until the flight is full or all cargo is loaded or time warrants close of flight (e.g. two hours before flight departure).

Check Flight Allocation Sheet where applicable that all EAT/PER shipments are loaded or Operations Dept are aware why not loaded

To finalise a flight, request a load tally. The computer system will show a message "flight manifested" when this appears, the flight is closed.

UNCONTROLLED DOCUMENT (05 DECEMBER 2024 12:47:13)

UNCONTROLLED DOCUMENT

6.12.20 ULD Weather Protection

Pallets

All pallets, regardless of origin, destination, transport method etc. shall be protected from weather through the use of plastic sheets. One shall be placed on the base of the pallet prior to the start of the build; this shall then be folded into the pallet build after completion of the first 1/3 of the build height. A second sheet shall then be placed over the top of the completed load prior to securing the cargo net.

Exceptions are pallets containing cars, aero engines, fresh fruit & vegetables, and certain live animals/AVI. Note that Beneficial insects must be covered with plastic sheets as described above.

Pallets containing CAO shipments must be weather protected using transparent plastic to ensure visibility of the CAO label.

Containers

All Asia Pacific destination/transit containers loaded with shipments and travelling on the Intercontinental network shall be protected from weather through the use of specially designed plastic 'hoods' and plastic shrink wrap, or by the use of a weatherproof ULD. All Americas & Europe destination containers loaded with shipments and travelling on the network on day 6 and day 7 shall be protected from weather through the use of specially designed plastic 'hoods' and plastic shrink wrap, or by the use of a weatherproof ULD.

It is the DHL origin stations responsibility to ensure all ULDs built at customer and 3rd party locations comply with the ULD weather protection instructions prior to uplift onto the DHL network.

The specially designed hoods shall be used for the following container types*:

- AKE
- LAK / AAJ
- AAC / LAY
- AAA
- AAX
- AMJ
- AMX

*As more hood designs become available, these shall be used for the container types for which they are designed.

Note: When plastic hoods are not available, weather protection shall be carried out in accordance with the three step method described below, but using plastic sheets instead of the plastic hood.

UNCONTROLLED DOCUMENT (05 DECEMBER 2024 12:47:13)

UNCONTROLLED DOCUMENT

UNCONTROLLED DOCUMENT

UNCONTROLLED DOCUMENT

Application of the plastic hoods

The plastic hoods have been specifically designed for certain container types, and shall be used for the purpose of weather protection.

The application process comprises of three key steps which shall be followed in sequence:

Step 1 – Shrink Wrap the bottom third of the container:

- 3 x laps of shrink wrap are to be applied to the bottom third of the container.
- The shrink wrap shall extend to the base plate of the container.
- Ensure the shrink wrap is applied evenly and that there are no gaps between each layer.

Step 2 – Fit the plastic hood onto the container

- Select the corresponding plastic hood for the container type being protected from weather.
- Place the plastic hood onto the ULD ensuring the contours of the hood and container align.
- For 3m high containers (e.g. AMX), it is recommended to use guide poles or other such devices to assist with the placement of the hood.
- Ensure the plastic hood overlaps the shrink wrap applied in step1.

Step 3 – Fix the plastic hood in place with shrink wrap

- Once the plastic hood is fitted, it needs to be held in place with shrink wrap.
- 3 x laps of shrink wrap are to be applied in a diagonal pattern around the ULD.
- It is important to drive out any air pockets from the plastic hood before applying the shrink wrap.

Note: ULD pull straps shall remain accessible at all times; a small cut is to be made through the plastic hood so that the ULD pull strap can be fed through. The area around the strap is to be made good using shrink wrap.

It is not permitted to apply weather protection on structural ULDs (containers) which contain any of the following: Live Animals (AVI), Dry Ice (ICE) and Cryogenic Liquids (RCL) – note: some Perishables (flowers, fruits and vegetables – PEF and PEP) should also not be weather protected.

Regardless of the weather situation, when transporting WET cargo, a layer of plastic sheeting shall be placed on the base of the ULD prior to build-up.

For full details, contact your Regional ULD Control team.

Ordering of the plastic hoods

The plastic hoods can be purchased from the DHL Network Supplies E-Shop, which is available through one of the following links:

https://oso.dhl.com/dhluser/en

https://get.dpdhl.com:44306/home?sap-client=300&sap-language=space

UNCONTROLLED DOCUMENT (05 DECEMBER 2024 12:47:13)

UNCONTROLLED DOCUMENT

Containers with Weatherproof Symbols

DHL ULDs are designed with enhanced weather protection capability. If a DHL ULD displays the following symbol, no additional weather protection is required unless a severe weather event has been alerted by a Regional NCG.





Severe Precipitation and/or Snow

Severe weather incident updates are communicated by the Regional NCGs and trigger additional weather protection requirements.

If severe precipitation and/or snow is expected at origin or destination, ULDs with a weatherproof symbol shall receive additional protection by following **6.12.20 - ULD Weather Protection**.

In order to avoid ingress of water into the aircraft, ULDs which are exposed to severe precipitation and/or snow during ground handling shall have an additional layer of plastic sheeting placed over the top of the completed ULD prior to being taken outside.

Just prior to being loaded onto the aircraft, this additional layer of plastic shall be removed along with any standing water and/or accumulation of snow. The extra plastic shall be safely stored until it can be disposed of in an appropriate manner.

Note: It is important to maintain control of any loose material on the ramp in order to ensure it does not pose a FOD hazard to aircraft.

UNCONTROLLED DOCUMENT

UNCONTROLLED DOCUMENT

UNCONTROLLED DOCUMENT (05 DECEMBER 2024 12:47:13)

UNCONTROLLED DOCUMENT

6.12.21 Containers with Fire-Resistant Properties

Certain ULDs have been designed with enhanced fire-resistant properties. This type of ULD has successfully passed a 6 hour full scale ULD burn test. This type of ULD can be recognized by the following “F” symbol:



UNCONTROLLED DOCUMENT

UNCONTROLLED DOCUMENT

UNCONTROLLED DOCUMENT (05 DECEMBER 2024 12:47:13)

UNCONTROLLED DOCUMENT

6.12.22 Special Load Loadability Checks

6.12.22.1 Definition of Special Load

A Special Load is defined as any cargo that requires special handling and securing/restraining procedures.

In simple terms, if the cargo fits inside a certified container or can be transported on a pallet using the appropriately certified pallet net as primary restraint, and can be locked into the aircraft using the aircraft's Cargo Loading System (CLS), it is not considered a Special Load.

If the ULD is secured to the aircraft structure by another means (e.g. by using straps for 'floating pallets') the ULD shall be considered a Special Load.

There are, however, certain circumstances where the characteristics of the cargo may result in it being classed as Special Load regardless of whether it can be loaded inside a ULD or not.

6.12.22.2 Characteristics of Special Loads

Anytime a ULD requires securing to the aircraft structure by means other than the CLS, the cargo shall be classified as a Special Load.

Additionally the following characteristics help to indicate whether cargo should be considered a Special Load. The operator can confirm whether the cargo is in fact a Special Load.

- Offset Cargo
- Overweight Cargo
- Overhang Cargo
- Outsized Cargo
- Sharp or Piercing Cargo
- Unusually Shaped Cargo
- Motor Vehicles and Other Wheeled Cargo
- Tall Cargo
- Cargo not Restrained by the Aircraft CLS
- Cargo Using a Sandwich Pallet
- Floating Pallet

6.12.22.3 Determining Loadability of Special Loads

When determining whether a Special Load (SL) can be loaded on a certain aircraft, certain checks have to be made to confirm whether the weight and dimensions of the Special Load are within aircraft limitations, and whether the Special Load does not conflict with any operator restrictions. The Aircraft Technical Specifications chapters will contain:

- Position Maximum weight restrictions, to determine whether the SL is too heavy
- Aircraft Door dimensions, to determine if the SL can be loaded through the Cargo Door
- Maximum Package dimensions tables, to determine if the SL can be rotated through the Cargo Door
- Cabin Contour dimensions, to determine if the SL fits within the contour of the aircraft cabin
- Operator or Aircraft specific restrictions, like Dangerous Goods or engine loadability tables

Always refer to the Aircraft Technical Specifications chapters to determine whether a large, heavy, or oddly shaped Load would fit into an aircraft and how many positions it would occupy. Refer to the content of AGOM Chapter 6 to determine build-up and restraint requirements for the Load.

UNCONTROLLED DOCUMENT (05 DECEMBER 2024 12:47:13)

UNCONTROLLED DOCUMENT

If, after reviewing the relevant Aircraft Technical Specifications chapter, further support is required with determining whether a Special Load can be loaded on a specific aircraft, please contact the following departments, dependent on the origin where the Special Load will depart from.

Special Load Origin Region	Support Contact
Americas	**amnetworkairside@dhl.com**
Asia Pacific	**AviPrgAP@dhl.com**
Europe	**euncg.airside@dhl.com**
Middle East and North Africa	**rcgmena@dhl.com**
Sub-Saharan Africa	Check with SSA Airside or Operator

UNCONTROLLED DOCUMENT

UNCONTROLLED DOCUMENT

UNCONTROLLED DOCUMENT (05 DECEMBER 2024 12:47:13)

UNCONTROLLED DOCUMENT

6.13 Final Flight Documents

For North America variations see DHLAGOM Americas Regional Variations

When flight documents are complete the following actions are taken:

- Receive final flight documents from Operations, check manifested total weights against actual weights recorded on Pallet Weight Statement and Check Weight Form. Report any discrepancy to the Export Supervisor for investigation
- Note truck to aircraft number on drivers manifest where applicable.
- Send final documents to aircraft with driver of truck
- Record the name of warehouse person who collated load onto daily flight schedule and send to Operations after completion of final flight details.
- Complete Pallet Weight Statement and Check Weight Form for all weight critical flights
- Show station flight number and date at top, net weight of cargo loaded for bulk, gross weight for pallet, and destination, any special remarks, add signature and works number and send the Pallet Weight Statement (PWS) to Operations when finalised, together with warehouse copy of final manifest. Ensure mail weight is marked in appropriate section of statement. Send copy PWS and Check Weight Form to the Systems Supervisor
- Record on Daily Flight Schedule truck to aircraft number(s) and name of person completing the PWS. Send to Operations after completion

6.13.1 Last Minute Freight

For NORAM variations see DHLAGOM Americas Regional Variations

Before giving permission for movement to depart, check the computer and/or with Operations to ensure if last minute freight (LMF) has not been added to the flight.

6.13.2 Off-loaded or Damaged Freight

Send documents of off-loaded cargo to Operations and await instructions. Operations will advise whether to retain for another movement or restore in warehouse. Cargo that is found to be damaged shall be subjected to the following:

- An assessment of the damage is conducted to determine whether such cargo is fit to be transported on an aircraft
- If determined not fit for transport, such cargo is removed from the aircraft, ULD, the shipment, or normal storage area, as applicable
- Damage is documented
- The customer airline is notified

UNCONTROLLED DOCUMENT

UNCONTROLLED DOCUMENT

UNCONTROLLED DOCUMENT (05 DECEMBER 2024 12:47:13)

UNCONTROLLED DOCUMENT

6.14 Information and Data Transmission to Load Control

Capturing accurate data about the shipment is vital for the smooth and safe operation of air cargo transport. Without the correct data being communicated in a timely manner to the correct people, the shipment will not progress through the air transport system.

Local stations must have a system/procedure in place to accurately record information regarding ULDs and shipments. The system/procedure must allow for recorded data to be transmitted/shared with relevant department systems, and all interested parties.

Provide load control with the following information:

- ULD identification;
- (x)UWS Message;
- ULD gross weight;
- ULD information codes (e.g. X = empty ULD);
- Special handling codes and complementary information, if required, for example;
    - AVI/species;
    - PER and PIL/ temperature range;
    - OHG/length and direction;
    - RRY/T.I.
- ULD contour (where applicable);
- Bulk load: pieces and weight (where applicable);
- Airport of unload;
- Cargo NOTOC
- Prepare the manifest and documentation, for hand over to the ramp

UNCONTROLLED DOCUMENT

UNCONTROLLED DOCUMENT

UNCONTROLLED DOCUMENT (05 DECEMBER 2024 12:47:13)

UNCONTROLLED DOCUMENT

6.15 Assignment of Freight to Movement

1. **Purpose**

This procedure is to ensure that all outbound material contained in handling units are allocated to an outbound air or road movement.

2. **Requirement**

All material must be assigned in accordance with the latest version of bagging / routing and sort-splits taking into account prioritisation guidelines as published by the relevant network planning groups.

It must be ensured on a daily basis that the HUIDs for Handling Units, which have physically left the facility, have been correctly assigned to outbound movements.

Reasons for HUIDs left in the system must be monitored, analysed and appropriate measures introduced to reduce the number of unassigned HUIDs to zero.

Monitor build up of freight/Handling Units. Inform relevant section / persons when Containers need to be ramp merged.

3. **Procedure**

Allocate correct Handling Units to correct Movement. Comply with the following:

4. **Utilisation of Transport Routes**

Utilise latest issued bagging / routing / sort-splits / priority guidelines. Include transfer units.

Allocate HUs/FTUs according to weight and balance restrictions, Dangerous Goods guidelines. Allocate HUs/FTUs according to Global Standard Flagging, Procedure, weights and Movement capacity.

Where possible, priority material should be allocated to enable unloading first.

5. **Control of Load**

- Check potential load of Movement and note available payload
- Avoid overload situations by informing Operations in advance.
- Re-assign excess material to an alternative Movement wherever possible.
- Ensure Containers that have been merged on the ramp are physically re-weighed.
- If excess material, re-assign material.

  - Re-assign material so maximum load criteria is met and uplift priorities are maintained.

  - HU/FTUs should be allocated according to priority, destination, contents, weights and volume.

  - Priority material should receive priority uplift over the other product types, and in cases of Service failure, any service recovery actions for the material should be prioritised as appropriate

6. **Flight Closure and Reconciliation**

Produce load sheet and load plan. Pass these documents to Movement Monitor.

If Movement is commercial, forward details to Commercial Uplift department who will prepare the necessary documentation.

Check for discrepancies.

UNCONTROLLED DOCUMENT (05 DECEMBER 2024 12:47:13)

UNCONTROLLED DOCUMENT

7. **Discrepancies**

Check daily to ensure there are no discrepancies between actual and allocated HU/FTUs.

If Handling Unit IDs are still in the system, but have physically left the facility, they need to be cleared from the system.

To clear HUIDs, use the Movement number DELETE x (where x is a number from 0-9). They may not be assigned to a dummy Movement (e.g. DUMMY x, CLEAN x, CLEANUP x, etc).

Analyse reasons for HUIDs left in the system and introduce measures to reduce the number of unassigned HUIDs to zero.

UNCONTROLLED DOCUMENT

UNCONTROLLED DOCUMENT

UNCONTROLLED DOCUMENT (05 DECEMBER 2024 12:47:13)

UNCONTROLLED DOCUMENT

6.16 Road Vehicle Procedures

6.16.1 General

All road movements are subject to the following procedure. Drivers and/or loading staff, as appropriate, must ensure the following:

- Any Damage identified must be reported to Load Lead for further action
- Air containers and handling equipment (e.g. dollies) must not be transported with forklifts unless specifically designed for that purpose. Exceptions to this are detailed in B401.1 “Transporting ULDs”.
- All Movement documentation must be loaded in cab
- Each road Movement must have a correctly filled out and signed transport document (CMR) accompanying it
- All loading must be compliant with the Business Rules for Containerisation
- The load of the vehicle must be weighed to ensure maximum payload is not exceeded
- If Shipment Paperwork is not loaded in cab, the location must be specified on the Load Message
- Road Movements must be sealed by DHL staff and not the Driver (even if from DHL)
- All Drivers must be contactable (e.g. by mobile phone)
- All Dangerous Goods material must be loaded and transported in accordance with ADR, 49 CFR or other state regulations
- Loose loaded Movements must be given a Handling Unit I.D (HUID) which is to be placed with the Movement documentation
- Seals must be stored in a controlled and secure environment

6.16.2 Driver Responsibilities

It is the vehicle driver’s responsibility to ensure / carry out the following actions as appropriate:

- Driver is to approve transport documentation when loading has been carried out in compliance with **6.16.3 - Load and Documentation Checks** Section 3 - Overseeing of Vehicle Load and **6.16.4 - Loading Procedure** Section 4 - Shipment Documentation
- Immediately contact DHL to advise of any delays or problems en-route
- Legal responsibility for condition & load of vehicle
- Comply with health & legal requirements (e.g. fit to drive, working hours, license, dangerous goods / awareness training as appropriate)
- Before departure driver must check if vehicle is sealed by DHL staff and its load has been weighed. The Driver must inform the Load Lead when this is not carried out

UNCONTROLLED DOCUMENT

UNCONTROLLED DOCUMENT

UNCONTROLLED DOCUMENT (05 DECEMBER 2024 12:47:13)

UNCONTROLLED DOCUMENT

UNCONTROLLED DOCUMENT

UNCONTROLLED DOCUMENT

6.16.3 Load and Documentation Checks

1. **Purpose**

The purpose of this procedure is to ensure that a road movement is correctly loaded and departs safely carrying valid and accurate documentation.

2. **Procedure**

The following procedure / instructions must be adhered to before a road transport movement is dispatched

- The driver cannot seal the vehicle
- The Driver must not leave without signing the Transport Document
- The Load of the vehicle must be weighed to ensure maximum payload is not exceeded
- All Dangerous Goods material must be loaded and transported in accordance with ADR regulations
- The vehicle must not depart until all cargo doors on the vehicle have been sealed

3. **Overseeing of Vehicle Load**

Staff, responsible for overseeing vehicle loading, are responsible for the following:

- Assist on maximising load
- Approve safe and correct loading, ensure that vehicle foreign objects do not obstruct the loading area
- Shipment paperwork should be loaded in cab

All material must be loaded and transported in accordance with all relevant regulations.

4. **Check Vehicle Load**

Staff responsible for checking vehicle load (may be the same as vehicle overseer) are responsible for the following:

- Receiving transport document
- Validating vehicle contents
- Approval of loading
- Only accepting additional material after confirming that system weight has been/will be updated
- Validating information
- Approval of documentation received
- Closing of vehicle doors

5. **Transport Document Approval**

When the requirements of overseeing and checking the vehicle load, as detailed in above, have been satisfied, the responsible staff member will approve the Transport Document.

This requires:

- Sign transport document,
- Sign the multimodal documents (NOTOD) if applicable.
- Handover transport document to the driver, at least two copies
- Each road Movement must have a correctly filled out and signed transport document (CMR) accompanying it.

Before departure driver must check if vehicle is sealed by DHL staff and its load has been weighed. The Driver must inform the Load Lead when this is not carried out.

UNCONTROLLED DOCUMENT (05 DECEMBER 2024 12:47:13)

UNCONTROLLED DOCUMENT

UNCONTROLLED DOCUMENT

UNCONTROLLED DOCUMENT

6.16.4 Loading Procedure

Before dispatch of all Road Movements from either HUB or Gateway, it must be ensured that all material and shipment documentation is securely loaded on the vehicle and that it is correctly prepared for departure.

1. **Staging of Load**

When assembling load for a road movement the following actions are to be carried out:

- Collect material for loading.
- ULDs/pallets received from the sort have to be checked for the following:

  - ULD ID against ULD number stated on the tag

  - ULD ID must appear on the loading instruction

  - Pallets are covered with plastic and the net is properly secured

  - All freight must be fully labeled with shipment HAWB, HUID, or MAWB

2. **Material Not for Immediate Loading**

If material is not to be loaded immediately, such material should be held in a designated pre-loading area. The following actions/pre-cautions should be taken:

- Ensure material is secure.
- Avoid damage by weather (heat, wet, etc.).

3. **Material for Immediate Loading**

If loading material immediately, the following applies:

- Load Lead should monitor all loading and ensure all material is correctly loaded and build-up
- Load Lead ensures all drivers are reachable (e.g. by-mobile phone numbers)
- Load Lead should ensure all material is assigned to movement respecting max. payload of vehicle. Pass information to relevant departments for material not loaded or retrieved due to overweight
- The Load Lead must be advised of damage or incompatibility identified and material held pending further instructions
- Check if it is possible to seal the vehicle. If not, report to Load Lead
- It is the responsibility of the Truck Monitor and Load Lead to issue appropriate instructions for the correct and safe loading of the vehicle or in the event of damage or discrepancy appropriate instructions to resolve the problem
- The freight must be secured to avoid movement and / or damage
- Ensure no damage is incurred through bad loading (Poor stacking, throwing etc.)
- Air containers and handling equipment (e.g. dollies) must not be transported with forklifts unless specifically designed for that purpose. Exceptions to this are detailed in B401.1 “Transporting ULDs”.
- Loose loading of material must be avoided by consolidating material into Handling Units (HUs) wherever possible
- Take measures to avoid damage by weather
- Adhere to any specific load and/or priority instructions
- Ensure that material on the same T-Form is travelling on the same vehicle
- Ensure that priority material is loaded in such a manner as to facilitate ease of recovery at destination

UNCONTROLLED DOCUMENT (05 DECEMBER 2024 12:47:13)

UNCONTROLLED DOCUMENT

4. **Shipment Documentation**

Before departure the Load Lead or other designated person must ensure correct loading of documentation / paperwork.

Shipment documentation / paperwork should be loaded in cab. If not loaded in cab, communicate this information to Load Lead so that it can be specified on the Load Message.

5. **Securing Vehicle**

Once loaded the vehicle should be sealed. Once sealed the movement documentation should be updated as necessary.

Carry out the following checks / instructions:

- Ensure seal number is noted on transport document (CMR, T1-form)
- Load Lead checks if cored seals are used and ensure all sealing is done by DHL staff only and not by the drivers (even if from DHL) and ensures mat seals are stored in a controlled and secure environment
- If HUID tag created for the movement by weighing the vehicle, ensure to include HUID tag with the movement documentation
- Attach seal to lock
- Hand over Movement Documentation
- Ensure Driver loads movement documentation in cab
- If HUID tag created for the movement by weighing material before loading, ensure to include HUID tag with the movement documentation
- Obtain a signed copy of the Movement Documentation

6.16.5 Vehicle Weighing

1. **Applicability**

If material has been weighed prior to loading, proceed to secure vehicle. If not weighing material pre-loading then the vehicle must be weighed.

2. **Weighing of Vehicle**

The Vehicle is weighed by using a weighbridge or other locally approved method.

If vehicle overweight return to warehouse and establish which material to unload pre-departure in consultation with Load Lead.

UNCONTROLLED DOCUMENT (05 DECEMBER 2024 12:47:13)

UNCONTROLLED DOCUMENT

UNCONTROLLED DOCUMENT

UNCONTROLLED DOCUMENT

6.16.6 Documentation

1. **Purpose**

To ensure complete and correct documentation is prepared and passed for loading to outbound road movements.

2. **Procedure**

The following procedure must be complied with at all times to ensure movements are despatched on time with correct and complete load and documentation.

3. **Preparation of Documents**

Action

- A Transport Document must be prepared for every outbound road movement
- Complete ADR/DGR/CFR 49 documentation
- Appropriate ADR/DGR/CFR 49 documentation (Multimodal document -NOTOD) must be completed.
- Complete Truck Documentation
- Enter all seal numbers, licence plates, drivers' names, telephone numbers and ‘T Status’ codes into the Movement Management application
- Prepare movement documentation
- Complete appropriate ADR/DGR/CFR 49 documentation (multimodal document -NOTOD)
- Obtain T1 form (where applicable)
- Complete CMR

Enter Details in Movement Management System, following must be entered into the Movement Management application and included on the transport document:

- All seal numbers
- License plates
- Drivers' names
- Telephone numbers
- ‘T Status’ codes

4. **Collation of Documentation**

All completed documentation must be collated and forwarded, including:

- Shipment paperwork received from paperwork sorters.
- ‘T Status’ and Manifest (attached to CMR) for material transported under Customs bond.

Pass all paperwork for loading.

- Ensure that ALL movement documentation and shipment paperwork is passed for loading.
- Shipment and Movement paperwork must be in separate pouches.
- Movement documentation must be loaded in cab

Inform truck Monitor (messages) of movement details in order that movement and load messages may be sent.

UNCONTROLLED DOCUMENT (05 DECEMBER 2024 12:47:13)

UNCONTROLLED DOCUMENT

UNCONTROLLED DOCUMENT

UNCONTROLLED DOCUMENT

6.17 Recovery of Off-Loads on DHL Air and Road Movements

1. **Purpose**

To detail the procedure for retrieval and processing of planned departure load off-loaded after closure of movement.

2. **System Entry – On Hold Check-pointing of Delayed Pieces**

All held or delayed Pieces must be given correct on hold (OH) event and remark as required by checkpoint business rules.

3. **System Entry – Updating of Transmissions**

Transmissions must be updated and changes to Load Plans/Load Sheets made as required.

4. **Containerisation Business Rules**

All scanning must be done according to the: "Business Rules for Containerisation".

5. **Arrange Alternative Uplift**

When arranging alternative uplift, preference must be given to priority material as described in the 'Movement Loading Priorities' published by NPG.

6.17.1 Procedure

1. **Unload Material**

- Material can only be offloaded if advised by Flight/Truck Monitor
- All GENERAL FREIGHT should be scanned off the movement and the shipments removed from Handling Units if necessary
- Identify material to unload
- Obtain information from Load Control
- Ensure all required items are unloaded
- Do not unload any other material
- HUs must remain correctly built, so that they can still be easily and safely loaded and handled
- All relevant paperwork must be unloaded
- Check if item retrieved requires paperwork unloading or contingency can be arranged

Ensure that

- Relevant DGR paperwork (NOTOC/NOTOD) are recovered from crew
- Load Control receives accurate information on changes as soon as possible
- All relevant departments are informed about changes
- Any changes are accurately recorded on the Load Sheet and Load Plan
- Captain must confirm acceptance of any changes
- If movement needs to be re-opened in the system, obtain approval & re-open movement
- If de-allocating whole ULD is necessary, de-allocate container
- If whole ULD doesn't need to be de-allocated, ensure tr material is processed correctly

UNCONTROLLED DOCUMENT (05 DECEMBER 2024 12:47:13)

UNCONTROLLED DOCUMENT

2. **Recovery Action**

Determine Next Uplift

Attempt to forward material on earliest possible appropriate uplift, ensuring preference is given to priority material. Make alternative plans for contingency uplift/transport available. If material will not travel in operations period, process as non-uplifted material.

If material will travel within operational period, pass for further processing. All non-uplifted material must be communicated to destination of movement with details of contingency.

UNCONTROLLED DOCUMENT

UNCONTROLLED DOCUMENT

UNCONTROLLED DOCUMENT (05 DECEMBER 2024 12:47:13)

UNCONTROLLED DOCUMENT

UNCONTROLLED DOCUMENT

UNCONTROLLED DOCUMENT

6.18 Commercial Up-lift Procedures

6.18.1 Pre-flight Administration

1. **Purpose**

The Confirmation of Information requirements and instructions for handling freight on commercial movements and to agree bookings with the appropriate airline

This instruction details the pre-flight administration requirements for the planned transportation of freight on commercial carriers (other airlines).

2. **Requirement**

Flight Instructions and databases must be updated as soon as changes are known. All planned flights must have MAWBs allocated to them.

Sufficient stock of MAWB copies or range of MAWB numbers must be maintained.

Flight Instructions must include core details as per the procedure detailed in COM 1.30.3.

All destination and airline requirements must be defined and adhered to.

6.18.2 Procedure

The following procedures and tasks as detailed must be carried out and all relevant timescales adhered to.

1. **Space and Weight Allocation Administration**

Obtain confirmation from airline. Agree allocation with the airline, and confirm allocation is agreed for a set period. Action / Inform the following:

- Enter information in system
- Advice interested parties. Include internal departments/contacts as well as external agencies etc

2. **Preparation of Flight Instructions**

Collate the following information:

- Destination requirements
- Customs requirements
- Airline handling requirements
- Security requirements
- Bagging & handling requirements
- Handling equipment requirements
- Contact tel. numbers
- Pivot weights (Minimum Weights if applicable)
- Allocations
- Agreed rate for MAWB, contingency arrangements etc

Update Flight Instructions and ensure Flight Instructions are prepared in good time for operational period.

UNCONTROLLED DOCUMENT (05 DECEMBER 2024 12:47:13)

UNCONTROLLED DOCUMENT

3. **Flight Instructions must include:**

- Allocations and how to deliver them
- Warehouse cut-off time for flight
- Delivery time to airline/handling agent
- Flight number
- Flight departure time
- IATA final destination airport code
- Minimum weights (pivot weights) if applicable
- Special destination requirements e.g. consolidated Manifest requirements
- Communication requirements e.g. if destination requires fax copy of MAWB

4. **Flight Instructions can be used to:**

- Produce individual flight preparation sheets
- Communicate details of workstation numbers / workplace ID, where to place forwarding documentation and other guidelines to assist warehouse staff
- Detail how and to whom material should be delivered
- Aid communication (airline/handling agent phone numbers, pre-alert details and addresses, etc)
- List MAWB numbers to be used for each flight

5. **Availability**

Make Flight Instructions available to relevant parties. Ensure that:

- All appropriate staff are fully informed about changes to operational requirements
- Flight Instructions are handed over to operations department or make available in designated place/format
- Flight Instructions are available to third party

6.18.3 Allocation of Master Air Waybill (MAWB)

- Obtain MAWB stock.
- Allocate the MAWB to the planned allotment.
- Advise airline of MAWB to complete booking.

Receive confirmation from airline, preferably by fax/email to have a written proof or via the airport system.

- Create Air Cargo Manifest (ACM)

  - All Movements should carry an Air Cargo Manifest, or it should be available in the system, where required by destination Customs. When this is carried it must be loaded with the Movement documentation

UNCONTROLLED DOCUMENT

UNCONTROLLED DOCUMENT

UNCONTROLLED DOCUMENT (05 DECEMBER 2024 12:47:13)

UNCONTROLLED DOCUMENT

6.18.4 Documentation

1. **Purpose**

To ensure all documentation required for a commercial uplift is prepared and available in a timely manner

2. **Procedure**

The following requirements must be met for all freight destined for commercial uplift:

- A Master Air Waybill (MAWB) must be used for all freight sent on commercial carriers
- Correct information on Pieces and weights must be communicated and recorded correctly
- A copy of the MAWB must be faxed to destination if local requirements demand
- Cut MAWB

  - Prepare MAWB labels. IF MATERIAL DOESN'T REQUIRE A CONSOLIDATED MANIFEST, PROCEED TO NEXT STEP

  - IF MATERIAL IS 'T' DOC WHICH REQUIRES A CONSOLIDATED MANIFEST Prepare consolidated Manifest.

- Prepare any local/additional paperwork as per Flight Instruction Sheet. For example Dangerous Goods paperwork, dead load sheet, intangible Manifest, security paperwork, etc.
- Collate and distribute all documentation as per Flight Instruction Sheet.

UNCONTROLLED DOCUMENT

UNCONTROLLED DOCUMENT

UNCONTROLLED DOCUMENT (05 DECEMBER 2024 12:47:13)

UNCONTROLLED DOCUMENT

6.18.5 Up-lift / Non-uplift Advice

1. **Requirement**

Stations sending outbound freight on commercial movements on a regular booked basis must ensure the commercial flight destination is alerted to the pending arrival of such freight by way of a Commercial Flight Message (CFM).

The (CFM) must be sent for all Outbound Movements maximum 15 minutes after departure or as soon as confirmation of departure is received.

A non-uplift report must be sent for any planned flight that is not used. (This does not on apply if both Origin and Destination Facilities use the Calms application.)

Transfer and transit DHL Facilities must be copied on the CFM or non-uplift report.

The CFM/non-uplift report must contain contents as specified in the procedure detailed below.

2. **Procedure**

Load for Commercial Movement

If there is load to be uplifted on a commercial movement the following procedure applies:

- Send CFM

The CFM must contain:

- Addresses (include transit/transfer facility if applicable)
- Origin
- Destination
- Flight nr + date
- Flight nr + date for connecting flight (if applicable)
- Transport Document
- Transportation mode (courier/freight)
- ULD registration

Where required by destination, the CFM should also contain

- Nr of Pieces
- Weight
- Paperwork location
- Freight destination
- Freight location on Movement
- Destination breakdowns by Piece, weight, product

When the CFM is sent from Commercial Air Linehaul Management System (CALMS) this format is automatically applied.

Send transmissions. Obtain uplift confirmation by contacting the airline or handling agent or using the airline system.

If the material is short-shipped, follow the procedure detailed in **6.18.6 - Off-loaded / Non-uplifted Freight**

UNCONTROLLED DOCUMENT (05 DECEMBER 2024 12:47:13)

UNCONTROLLED DOCUMENT

3. **No Load for Commercial Movement**

If there is no material for movement the following procedure applies:

- Send a Non-uplift Report.

The Non-uplift Report must contain:

- Addresses (include transit/transfer Facility if applicable)
- Origin
- Destination
- Flight nr + date
- Flight nr + date for connecting flight (if applicable).

Note:

This procedure is relevant for planned flights only and does not apply for ad-hoc flights.

UNCONTROLLED DOCUMENT

UNCONTROLLED DOCUMENT

UNCONTROLLED DOCUMENT (05 DECEMBER 2024 12:47:13)

UNCONTROLLED DOCUMENT

6.18.6 Off-loaded / Non-uplifted Freight

1. **Requirement**

It is essential that both origin and destination stations are aware when a planned load of pieces or data cannot be uplifted and that the network is advised as soon as possible. This applies whether the load is intentionally offloaded for load control reasons or not uplifted or short-shipped in error.

A non-uplift Report must be sent to destination and transit/transfer points within 2 hours after movement departure.

All scanning must be done according to the applicable local WI's

All held or delayed material must be given a correct "On Hold" Event and standard remark as required by the Event Capture business rules.

2. Procedure

The following process applies when material is offloaded:

- Receive notification of offloaded material from commercial Carrier/handling agent.
- Establish details of offload. If necessary, send initial offload report. Elements should include

  - Transmission inaccuracy

  - Expected next update time.

Evaluate alternatives. This could be network alternatives, other commercial carriers and other routings.

- Send a new CFM to destination advising the new uplift details.
- Advise of variations to original CFM. Key elements are:

  - Transport Document Number

  - Flight nr

  - Flight date

  - Origin

  - Destination

  - Reason for offload

  - Paperwork discrepancy

  - Action taken

  - Issued by: as per transport document

  - Transport mode (courier, freight)

  - Total Pieces, offload Pieces, uplift Pieces

  - Total weight, offload weight, uplift weight

  - Returned to shipper (yes/no)

UNCONTROLLED DOCUMENT (05 DECEMBER 2024 12:47:13)

UNCONTROLLED DOCUMENT

Take the following actions as appropriate:

- If complete offload and material is to be consigned to a different carrier
  - Cancel the Master Airway bill
- If a partial offload takes place and material will be consigned to a different carrier
  - Update the load information in the system
- If material returns to the DHL facility
  - Capture appropriate Network checkpoint
- If transmission available
  - Re-open Movement on system
  - Escalation via Ops Data Control
  - Transmission should be retransmitted under the new Movement number
- If the material is a ULD
  - Delete allocation of ULD
- If the material is not a ULD
  - Scan material to unload from movement
- If the material does not return to the DHL Facility and the load split can be determined
  - Capture appropriate checkpoint for offloaded Pieces
  - Uplift to be monitored by the Flight Monitor
- If the material does not return to the DHL facility and the load split cannot be determined
  - Uplift to be monitored by the Flight Monitor

UNCONTROLLED DOCUMENT

UNCONTROLLED DOCUMENT

UNCONTROLLED DOCUMENT (05 DECEMBER 2024 12:47:13)

UNCONTROLLED DOCUMENT

UNCONTROLLED DOCUMENT

UNCONTROLLED DOCUMENT

6.19 General Freight Procedures

6.19.1 Documentation

1. **Requirement**

Requisite documentation for Transit/Transfer ULDs should be forwarded on the appropriate outbound movement to ensure such documentation is available on arrival of the shipment at final destination.

2. **Procedure**

Transfer points must place the transfer Paperwork pouches on board the next or final Movement to Destination. If next or final destination is the U.S. then the Paperwork (PPW) pouch must be opened and the contents verified as per AAMS procedures.

Paperwork pouches that miss connection must be opened and put on hold.

ULDs for which no Transfer Paperwork has been received must be put on hold until the paperwork arrives. An exception to this is where there is an agreement with the final destination station that the ULD can be sent without Paperwork.

All Transfer ULDs must be allocated to Outbound Movements in the ACS CDB module.

A Check must be performed for each Outbound Movement used to ensure all transfer ULDs have been correctly allocated to the Outbound Movement.

3. **Handling of Transit/Transfer Paperwork at Movement Origin**

The station of origin must ensure that the paperwork for the transfer ULD is collected and placed in the correct PPW pouch. The final destination of the ULD is then written on the paperwork pouch.

4. **Handling Transit Paperwork in Transit/Transfer Points**

Stations must ensure that the transit paperwork pouch is recovered from the inbound movement and that it is placed onboard the designated outbound Movement.

If next or final destination is the U.S. then the PPW pouch must be opened and the contents verified as per AAMS procedures.

6.19.2 Missed Connection

If the transfer paperwork does not make connection, the paperwork pouch should be opened and the paperwork put on hold by scanning or manual entry of the Paperwork in TGV.

6.19.3 Paperwork Not Received

If no paperwork received, place the transfer ULD on hold until paperwork is received. If there is an agreement with the Movement Destination that the ULD can travel without paperwork, the ULD can be forwarded.

UNCONTROLLED DOCUMENT (05 DECEMBER 2024 12:47:13)

UNCONTROLLED DOCUMENT

6.19.4 Transfer ULDs & Pre-Flight Manifest Check

Allocate transfer ULDs to the correct Outbound Movement in the ACS CDB module. Perform pre-flight Manifest check for all transfer ULDs.

Carry out the following:

- Print LDM
- Print 'ULD loaded report' Compare If necessary, make changes
- Manifest

6.19.5 Billing Process

1. **Purpose**

To ensure correct processing and forwarding of General Freight Billing Paperwork

2. **Requirement**

The ACS Standard Operations Procedures must be adhered to.

If scanning available, all MAWBS must be scanned at Departure or next transit Gateway. If no application available at origin or first transit Gateway, the original copy one (1) of each MAWB must be sent to Billing ACS daily.

One Original copy of the MAWB must be returned to the Shipper and one must be given to the Sales Agent.

3. **Procedures**

CHARGE CORRECTION ADVICES (CCA)

Create all necessary CCAs using the standard format available in CDB/TGV on Intranet.

Obtain Shippers signature on CCA form and hand over copies.

Send CCAs together with copy of MAWB to REGIONAL ACS Billing. Send copies daily.

File local copy of all documents (MAWB, signed CCA, etc).

MAWBs can be filed as CIA images in CDB or hard copy if locally required by Customs. Ensure documents can be retrieved quickly if requested.

UNCONTROLLED DOCUMENT

UNCONTROLLED DOCUMENT

UNCONTROLLED DOCUMENT (05 DECEMBER 2024 12:47:13)

UNCONTROLLED DOCUMENT

6.19.6 MAWB Issue

1. **Commercial Freight**

MAWBs are issued in accordance with the Shippers Letter of Instruction, insofar that they comply with all IATA and Governmental Regulations of the Countries to, from and over the consignment travels. There should always be a Shippers Letter of Instruction (SLI) form or a letter from the Shipper giving details of the shipments.

This must include

- The name and address of both the Shipper and Consignee
- Numbers of pieces and weight of the goods
- Details of the goods
- Value for Customs purposes and if the charges are to be prepaid or collect

If the shipments consist of any Dangerous Goods, then a Dangerous Goods certificate is required, this must always be supplied by the Shipper and never completed by DHL or the customer airline**.** (See DHLAGOM **7. Dangerous Goods and Exceptions Handling**)

If a shipment consists of any AVI, a Shippers Declaration for live animals must be completed. Details for completing the MAWB should be taken from the Shippers Letter of Instruction.

Customs documentation details are usually decided according to the value and/or the commodity of the goods. For goods in free circulation within the EC, travelling within the EC, no Customs Entry is necessary.

If the shipment consists of personal effects or goods of no statistical value, then the appropriate entry will be used. If the shipment is of a commercial nature and the value of the goods is under the limit required by Customs, then again the appropriate entry will be made. If the value of the shipment is more than the Customs limit then the procedure as laid down by local Customs Procedures must be complied with.

A copy of any document raised and/or approved by Customs must be attached to the file copy of the MAWB. This procedure applies to all commercial MAWBs issued.

UNCONTROLLED DOCUMENT

UNCONTROLLED DOCUMENT

UNCONTROLLED DOCUMENT (05 DECEMBER 2024 12:47:13)

UNCONTROLLED DOCUMENT

2. **Service Freight**

Service freight, often known as 'CoMat', will be handled in accordance will all regulations laid out in this manual.

All service freight MAWBs are usually issued by a nominated handling agent or forwarding company who handle aircraft parts, and deliver the goods to the airline as completed shipments.

The nominated handling agent usually handles all service freight delivered to the cargo terminal.

The shipper on all Service MAWBs must be shown as the relevant airline, and the Consignee should always be the same airline, with the appropriate department at the Airport of Destination unless otherwise specified. The agent's box on the MAWB shall show the actual shippers name and address.

The Customs details as laid down in the Commercial section are to be followed for all Service Freight.

Upon receipt of typed input into the computer system (if appropriate) and allocate to flight as required.

Some airlines require Service Cargo to be issued on normal revenue MAWBs with the above procedure for service freight to be followed, unless local procedures are agreed with the customer airline and Customs.

Each Station is to have a comprehensive list of service freight requirements for each customer airline, which must comply with all IATA requirements especially if Dangerous Goods are involved.

UNCONTROLLED DOCUMENT

UNCONTROLLED DOCUMENT

UNCONTROLLED DOCUMENT (05 DECEMBER 2024 12:47:13)

UNCONTROLLED DOCUMENT

6.20 Network Reports Compilation

1. **Requirement**

A comprehensive operations report is prepared by each station for submission to the network

Network report must contain details from all Network Movements and exceptional circumstances.

Reports must be in English and must be in a standard format.

ULD inventory must be entered in the ULD management application.

2. **Compilation of Reports**

All operational area reports must be collated at a fixed standard time.

The appropriate staff should verify that all reports are received. The appropriate remedial action shall be taken to obtain any late or missing reports.

3. **Collation of Reports**

Check if all reports collated are from the current OPS date.

Re-format all reports where necessary. Make sure to collate all reports in an agreed form and index.

4. **Sending of Reports**

Send recap report out to the network at a standard time, using correct recipient addresses.

Ensure correct OPS date. Be aware of major recap issues to enable accurate response to enquiries.

Enter ULD Inventory information in ULD Management application.

UNCONTROLLED DOCUMENT

UNCONTROLLED DOCUMENT

UNCONTROLLED DOCUMENT (05 DECEMBER 2024 12:47:13)

UNCONTROLLED DOCUMENT

6.21 Post Operations Check

1. **Purpose**

To ensure that Pieces and equipment are checked, available ULD stocks are logged, and any remaining Pieces are dealt with as appropriate in order to assist in providing a smooth handover to next operational period.

2. **Requirements**

ULD Inventory

In order to maintain an accurate record of ULDs the requirements detailed in DHLAGOM **6. Cargo and ULD Handling** must be complied with.

General Housekeeping

Check all equipment and report failures. Complete checklist and hand it over to Supervision.

- Ensure workplace is clean.
- Wear protective clothing where necessary.
- Fill out check-lists as required.
- Remove all tags and labels
- Store all excess nets, plastic covers and straps for ULDs/pallets in a designated area.
- Close all ULDs before storing outside.
    - Clear Pieces from the floor
    - Remove all debris.
- Clean vehicles if required
- Report spillages from Pieces. E.g. oil, paint.
- Ensure terminals are signed off
- Switch off lights and any appliances that are no longer in use and do not require leaving on.
- Secure Premises.
    - Responsibility for locking and opening up external doors must be given to designated personnel
    - Ensure all premises are secure and access is controlled.

Remaining Material

Ensure facility checked for unprocessed material and that no material is left lying in non designated areas.

If un-processes pieces found:

- Pass Pieces for exception handling. See procedure Process Material Not Uplifted.

UNCONTROLLED DOCUMENT

UNCONTROLLED DOCUMENT

UNCONTROLLED DOCUMENT (05 DECEMBER 2024 12:47:13)

UNCONTROLLED DOCUMENT

6.22 Cargo Handling Appendices

A. **Manual ULD Tag**

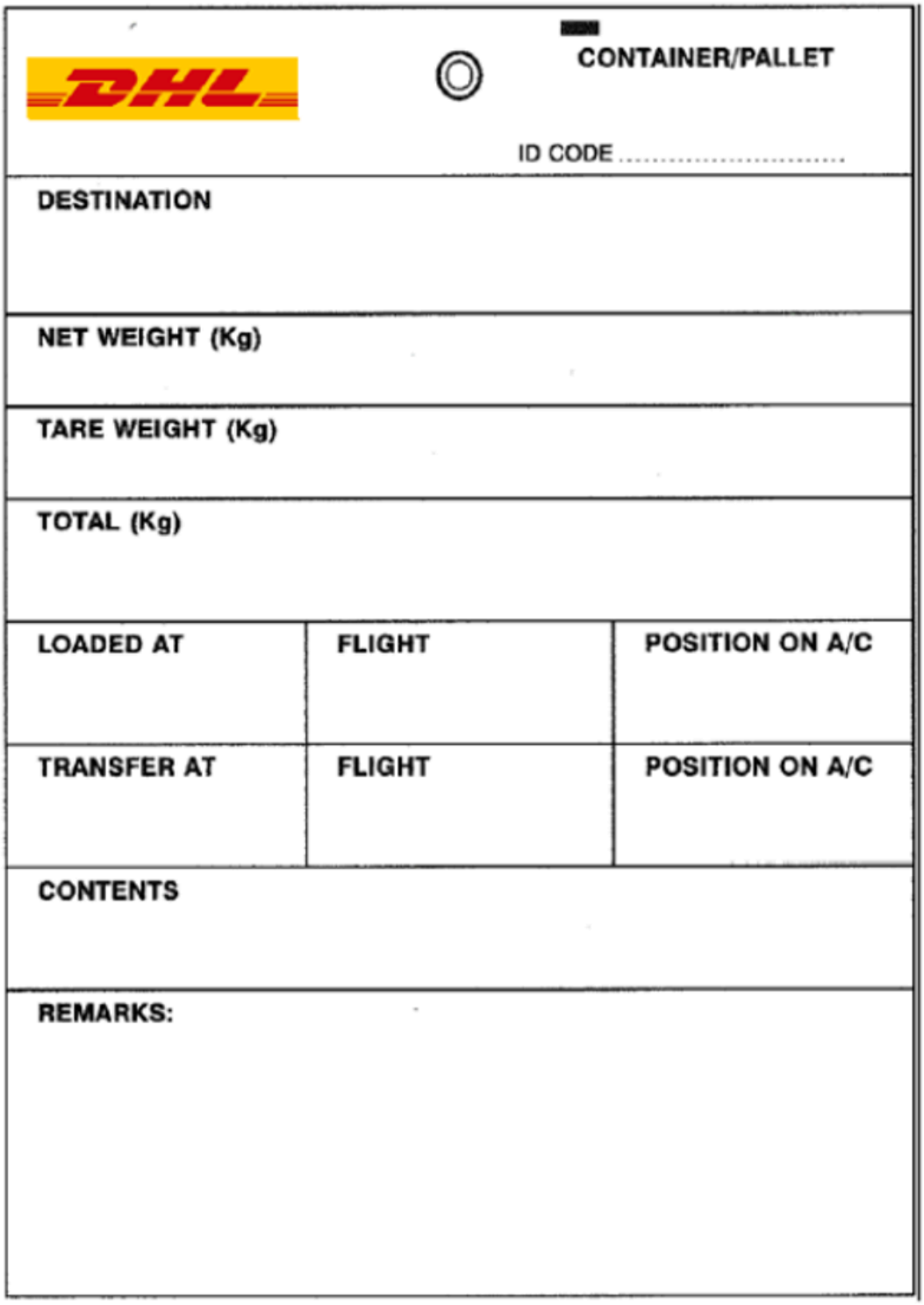

CONTAINER/PALLET ID CODE		
DESTINATION		
NET WEIGHT (Kg)		
TARE WEIGHT (Kg)		
TOTAL (Kg)		
LOADED AT	**FLIGHT**	**POSITION ON A/C**
TRANSFER AT	**FLIGHT**	**POSITION ON A/C**
CONTENTS		
REMARKS:		

Note: Kg may be replaced by Lbs as required

UNCONTROLLED DOCUMENT

UNCONTROLLED DOCUMENT

UNCONTROLLED DOCUMENT (05 DECEMBER 2024 12:47:13)

UNCONTROLLED DOCUMENT

B. **EDP ULD Tag**

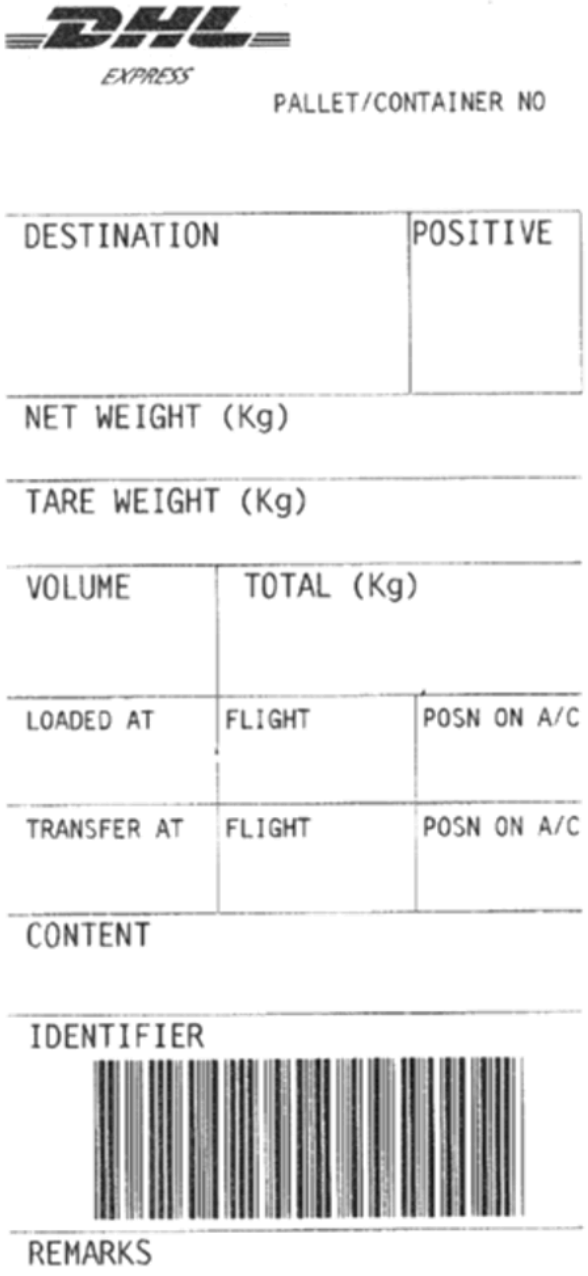

Note: Kg may be replaced by Lbs as required

UNCONTROLLED DOCUMENT

UNCONTROLLED DOCUMENT

UNCONTROLLED DOCUMENT (05 DECEMBER 2024 12:47:13)

UNCONTROLLED DOCUMENT

C. **Dangerous Goods ULD Tag Job Aid**

See **https://dpdhl.sharepoint.com/sites/Global-Restricted-Commodities/sitepages/Pick-Up-To-Delivery.aspx** for latest version of the Dangerous Goods ULD Tag Job Aid.

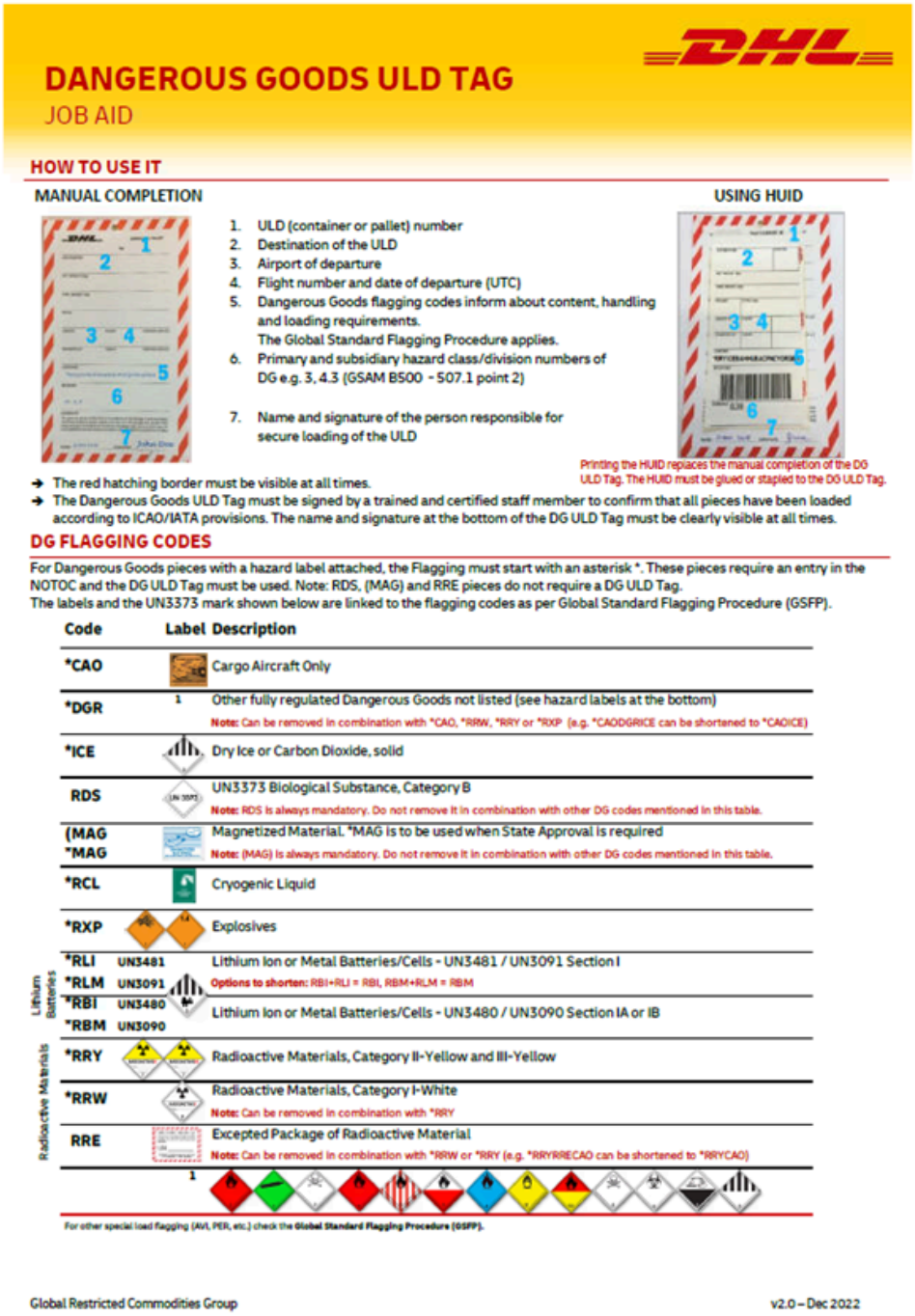

DANGEROUS GOODS ULD TAG

JOB AID

HOW TO USE IT

MANUAL COMPLETION

1. ULD (container or pallet) number
2. Destination of the ULD
3. Airport of departure
4. Flight number and date of departure (UTC)
5. Dangerous Goods flagging codes inform about content, handling and loading requirements.
   The Global Standard Flagging Procedure applies.
6. Primary and subsidiary hazard class/division numbers of DG e.g. 3, 4.3 (GSAM B500 - 507.1 point 2)
7. Name and signature of the person responsible for secure loading of the ULD

USING HUID

Printing the HUID replaces the manual completion of the DG ULD Tag. The HUID must be glued or stapled to the DG ULD Tag.

- The red hatching border must be visible at all times.
- The Dangerous Goods ULD Tag must be signed by a trained and certified staff member to confirm that all pieces have been loaded according to ICAO/IATA provisions. The name and signature at the bottom of the DG ULD Tag must be clearly visible at all times.

DG FLAGGING CODES

For Dangerous Goods pieces with a hazard label attached, the Flagging must start with an asterisk *. These pieces require an entry in the NOTOC and the DG ULD Tag must be used. Note: RDS, (MAG) and RRE pieces do not require a DG ULD Tag.
The labels and the UN3373 mark shown below are linked to the flagging codes as per Global Standard Flagging Procedure (GSFP).

	Code	Label	Description
	*CAO		Cargo Aircraft Only
	*DGR	1	Other fully regulated Dangerous Goods not listed (see hazard labels at the bottom) Note: Can be removed in combination with *CAO, *RRW, *RRY or *RXP (e.g. *CAODGRICE can be shortened to *CAOICE)
	*ICE		Dry Ice or Carbon Dioxide, solid
	RDS		UN3373 Biological Substance, Category B Note: RDS is always mandatory. Do not remove it in combination with other DG codes mentioned in this table.
	(MAG *MAG		Magnetized Material. *MAG is to be used when State Approval is required Note: (MAG) is always mandatory. Do not remove it in combination with other DG codes mentioned in this table.
	*RCL		Cryogenic Liquid
	*RXP		Explosives
Lithium Batteries	*RLI UN3481 *RLM UN3091 *RBI UN3480 *RBM UN3090		Lithium Ion or Metal Batteries/Cells - UN3481 / UN3091 Section I Options to shorten: RBI+RLI = RBI, RBM+RLM = RBM Lithium Ion or Metal Batteries/Cells - UN3480 / UN3090 Section IA or IB
Radioactive Materials	*RRY		Radioactive Materials, Category II-Yellow and III-Yellow
	*RRW		Radioactive Materials, Category I-White Note: Can be removed in combination with *RRY
	RRE		Excepted Package of Radioactive Material Note: Can be removed in combination with *RRW or *RRY (e.g. *RRYRRECAO can be shortened to *RRYCAO)
		1	

For other special load flagging (AVI, PER, etc.) check the **Global Standard Flagging Procedure (GSFP)**.

Global Restricted Commodities Group v2.0 – Dec 2022

UNCONTROLLED DOCUMENT (05 DECEMBER 2024 12:47:13)

UNCONTROLLED DOCUMENT

6.23 ULD Handling

Key terminology:

'Should' – refers to best recommended practises, strongly advised to comply with.

'Shall' – refers to a mandatory requirement.

Note:

In some instances, the word 'must' is used. This is to be defined in the same manner as 'shall' and denotes a mandatory requirement.

6.23.1 Introduction

This section gives handling details and characteristic for Unit Load Devices (ULDs) and other loading materials such as pallet nets, spreaders and straps.

Global Standard Operating Platform (Global SOP) shall be referenced in conjunction with this document when conducting any ULD related handling procedures so as to ensure compliance with both documents.

Please note that this chapter provides **minimum** requirements. Additional restrictions may be imposed by, Aviation Authorities and/or Airlines. Always refer to the Operations Manuals for the particular aircraft type.

The following pages shall ensure that ULD operations are conducted in accordance with the IATA ULD Regulations (ULDR) manual. In addition, stations shall have access to the IATA ULDR.

6.23.2 Definition of Unit Load Device (ULD)

Aircraft Unit Load Device (ULD) is a device for grouping, transferring and restraining of cargo for transit. It may consist of a pallet and an approved restraint method, or may be a container, both of which can be directly restrained onto the aircraft structure by the Cargo Loading System (CLS).

Any aircraft, and all components which make up the aircraft or fit into the aircraft (such as seats, galleys, ULDs) must be designed and manufactured under the control of an airworthiness authority, e.g. FAA for USA, EASA for Europe. An airline may not fit any item to its aircraft unless the manufacturer of that item can provide acceptable certification for that item to the airline and the airline's Quality Control department has accepted that certification.

Not all aircraft require certified ULD, but as a general rule:

- The main-deck of all aircraft require the use of certified ULDs
- All pallets and nets must be certified where ever they are fitted
- All aircraft manufactured by Airbus that utilize ULDs in the lower-deck holds require the use of certified ULDs in the lower-deck holds
- Douglas and Boeing aircraft have different requirements depending on aircraft and hold location. Boeing 767 aircraft lower-deck holds do not require certified containers

The final determination of whether a ULD can be used on any particular aircraft in any particular airline rests with the airline operating the aircraft.

More information on ULDs, Certification and ULD Repair can be found on the Global Network Equipment Smartconnect site:

UNCONTROLLED DOCUMENT (05 DECEMBER 2024 12:47:13)

UNCONTROLLED DOCUMENT

https://connect.dpdhl.com/content/page/623807ebd16e293a59855535

Note: You may need to copy and paste the link into your browser for it to appear correctly.

6.23.3 ULD Identifier

Most ULDs are identified by an (up to) 11 digit Alpha Numeric IATA standard unique code, for example:

- AMX1234DHL

The identifier can be split into three key sections, each containing unique information:

Section 1: ULD type, base size and contour

Section 2: ULD sequence number

Section 3: Owner Code

A further breakdown on the information found in section 1 of the identifier can be found below:

1. **Containers**

1st letter

Indicates if the type of container.

2nd letter

Indicates base size. For example :

A = 88” x 125”

B = 88” x 108”

E = 53” x 88”

G = 96” x 238.5”

K= 60.4” x 61.5”

L = 60.4” x 125”

M = 125” x 96”

P = 47” x 60.4”

Q = 60.4” x 96”

R = 96” x 196”

A full list of ULD base sizes can be found in the IATA ULD Regulations manual.

3rd letter

The third letter refers to the ULD contour. The standard ULD contours are described in the IATA ULD Regulations. Where a contour is used which is not described in the IATA ULD Regulations, an appropriate letter will be selected by the ULD owner.

Examples:

- LAY = Structural Certified Container, Base size 125" x 88", IATA Profile
- AKE = Structural Certified Container, Base size 60.4" x 61.5", IATA Profile

UNCONTROLLED DOCUMENT (05 DECEMBER 2024 12:47:13)

UNCONTROLLED DOCUMENT

2. **Pallets**

1st letter

Indicates if the pallet is certified ('P') or non-certified ('F').

2nd letter

Indicates the base size (see B403.1).

3rd letter

Indicates the restraint system to which the pallet is classified by airworthiness authority approval.

Examples:

- PAG = Certified Pallet, Base size 125" x 88", restraint system classification G.
- PMC = Certified Pallet, Base size 125" x 96", restraint system classification C.

6.23.4 ULD Flow Procedure

Ensure that if your location uses a handling agent, they are copied in on all ULD related communications & notified of requirements. **Do not** retain surplus ULDs at your location. All movements must be loaded with all available ULDs daily.

UNCONTROLLED DOCUMENT

UNCONTROLLED DOCUMENT

UNCONTROLLED DOCUMENT (05 DECEMBER 2024 12:47:13)

UNCONTROLLED DOCUMENT

6.24 Handling of ULDs

6.24.1 Transporting ULDs

The correct handling of ULDs is critical to avoid damage, which can impair loading, create safety hazards and incurs expense in repairs and delays. To prevent damage, ULDs shall be stored and handled using approved procedures and equipment.

ULDs shall only be moved by the following approved equipment: roller matting, pallet transporters, transfer pallets and dollies. Exceptions to this rule are the transportation by forklift of:

- Forkliftable Air Containers (Eg: *AKN or DPN)
- Empty Cargo Pallet
- Empty Cargo Pallet Stack
- Ground Container (G-Can)
- Nesting of empty Child ULDs.

Exemption to this rule requires formal Global SOP exemption approval.

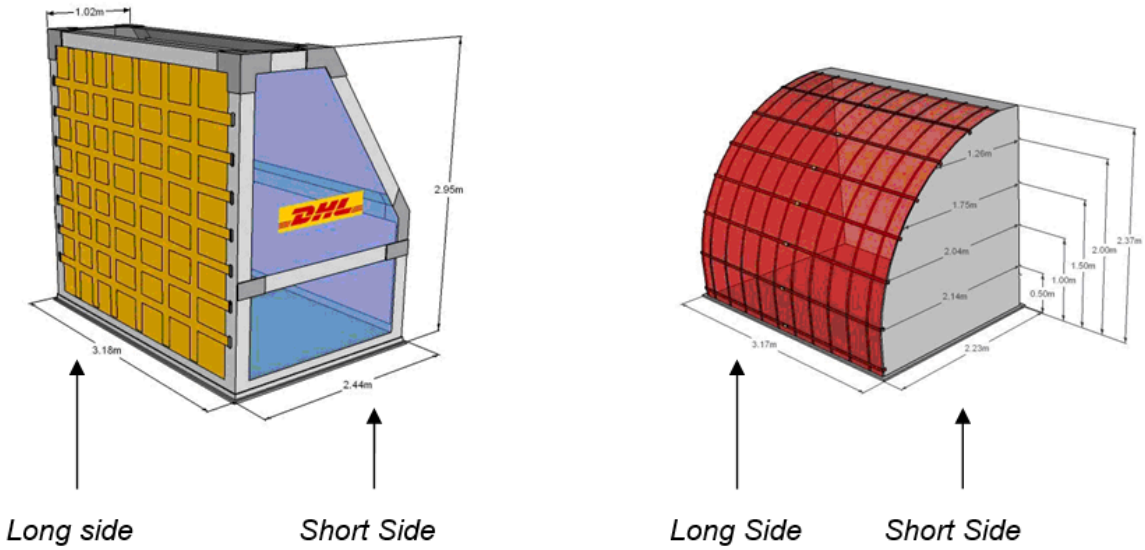

Empty ULDs loaded to box road trailers (that are not equipped with roller beds) are to be placed directly onto the wooden floor of the trailer. The placement of wooden dunnage for the empty ULD to sit on is not required.

Pallet and net are considered as one, which means they always travel together, whether the net is used or not.

UNCONTROLLED DOCUMENT (05 DECEMBER 2024 12:47:13)

UNCONTROLLED DOCUMENT

6.24.2 ULD Storage

ULD storage must comply with the following conditions:

All stations shall ensure they have equipment in place to ensure compliance with all ULD storage and handling policies and procedures. Stations shall take the flight and trucking schedules into consideration when preparing for any handling and/or storage activities. **Exemption to this rule requires formal Global SOP exemption approval.**

1. **Containers**

- Containers which are stored in the open must be secured against strong winds, rain and other adverse conditions
- Container doors and covers must be kept closed
- **Stacking** is **not allowed** for any containers, **excluding G-containers***.

***Note:** Stacking is only allowed in 2 layers (base G-container +1)

2. **Pallets**

- Pallets which are stored in the open must be secured against strong winds, rain and other adverse conditions
- Pallets shall be stacked in pallet racks (with the exception of Heavy Duty pallets). In case pallets racks are not available, the pallets may be stacked in a dedicated spot on appropriate dunnage
- When not in use, it is recommended that pallets with nets attached be kept in a dry location.
- Tie down straps shall be removed from the pallets before storing the pallets

For handling of damaged and unserviceable pallet nets, refer to **6.24.4 - Handling Damaged or Unserviceable Loading Equipment**.

3. **Excess Pallet nets and Tie-down Straps**

Pallet Nets

Excess pallet nets must be separated and stored individually in appropriate packaging (e.g. net bag), and shall be kept in a dry and known location.

DOX / WPX bags are **not to be used** for the storage of pallet nets.

If wet, hang the net up to dry and, once dry, store as described as per above.

Note: Minimum performance standards for the net bags can be found in **6.29 - ULD Handling Appendices**.

Tie Down Straps

Pack rolled up tie down straps in a dry place in an appropriate storage device.

If wet then hang up to dry, then store.

For handling of damaged and un-serviceable straps, please refer to **6.24.4 - Handling Damaged or Unserviceable Loading Equipment** Section 3.

4. **Loaded ULDs**

Loaded ULDs shall only be stored on castor decks, heavy duty ULD racks, ULD transporters, dollies or transfer pallets only.

UNCONTROLLED DOCUMENT (05 DECEMBER 2024 12:47:13)

UNCONTROLLED DOCUMENT

Storage on the ground, or on dunnage, is not allowed under any circumstances.

6.24.3 ULD Inspection

It is the responsibility of all individuals involved in the ULD handling process to inspect and ensure the serviceability and airworthiness of all ULDs. Each ULD, whether pallet or container, shall be subjected to an inspection before being sent into the sort or being loaded. The DHL serviceability and airworthiness criteria shall be more restrictive than the ULD Operational Damage Limits Notice (ODLN) provided by the ULD manufacturer.

ULDs must also receive a final visual inspection prior to loading onboard aircraft.

1. **The ULD Inspection**

The ULD shall be checked for cleanliness both on the ULD exterior surfaces as well as in the interior. Any stickers, tape or other adhesive materials which are not required as part of the onward transport of the ULD shall be removed.

All debris (e.g. remaining spreader boards, rubbish, cardboard etc.) shall be removed from the interior of the ULD.

The ULD serviceability check shall be carried out in accordance with the ULD Serviceability Criteria checklist.

Note: See **6.29 - ULD Handling Appendices** 4 – ULD Components

2. **Damage definition for DHL ULDs**

Allowable Damage is defined as damage to a ULD that does not adversely affect the structural integrity and ultimate load bearing capacity of the ULD. However, allowable damage should be repaired as soon as possible in order to prevent the intrusion of water or injury to operators due to contact with sharp edges. Allowable damage usually consists of small cracks, holes, breaks or tears.

Major Damage is defined as damage beyond the limits of allowable damage that adversely affects the structural integrity of the ULD and renders it un-airworthy. A component with major damage must be either repaired or replaced using approved materials by a certified repair station in order to return the damaged ULD to service.

Details of the maximum allowed damage criteria can be found in the ULD Serviceability Criteria checklist.

A pocket-sized condensed ULD Serviceability Criteria checklist is available from **global.uld.repair@dhl.com**.

A soft copy can be found here:

https://connect.dpdhl.com/content/page/623807ebd16e293a59855535

Note: You may need to copy and paste the link into your browser for it to appear correctly.

For handling of damaged and un-serviceable ULDs, see **6.24.4 - Handling Damaged or Unserviceable Loading Equipment**

3. **Maximum Allowed Damage for Non-DHL ULDs**

Non-DHL ULDs shall, as a minimum, comply with DHLs ULD Serviceability Criteria Checklist.

If the carrier/manufacturer has any additional handling/damage criteria above the standard ULD serviceability criteria, these shall be observed.

UNCONTROLLED DOCUMENT (05 DECEMBER 2024 12:47:13)

UNCONTROLLED DOCUMENT

6.24.4 Handling Damaged or Unserviceable Loading Equipment

1. **All ULDs**

All repairs shall be carried out by a DHL approved, certified repair station.

It is essential that the integrity of aircraft safety, schedules and efficiency of freight handling is not compromised by the use of damaged containers or pallets (ULDs)

Unserviceable ULDs must not be used for shipment transport.

All decisions on ULD serviceability and airworthiness must be taken in accordance with the ULD Serviceability Criteria checklist and this manual.

Once a ULD has been identified as damaged or unserviceable, the following must be observed in order to prevent the ULD from being loaded on-board an aircraft:

- Removed from service and visually marked as being unserviceable with a UNS tag.
- UNS tape may only be used in locations where dedicated storage areas for damaged ULDs **do not** exist. The use of UNS tape **does not** remove the requirement to use the UNS tag. One piece of UNS tape shall be applied across the face of the container but shall not be applied directly on top of the documents pouch. For pallets, one piece of UNS tape shall be applied to the top surface of the pallet in a diagonal direction from one corner to the other.
- Removed to a separate storage area

An unserviceable ULD shall be reported as UNS in the ULD management system (Regional ULD Management, RUM) – see **6.28 - ULD Management** .

Note: See **6.29 - ULD Handling Appendices** – UNS Tags

2. **DHL ULDs**

Damaged ULDs are to be transported by the most economical means possible to a DHL approved, certified repair station either as directed by ULD Control, or as per local arrangement. The following procedure must be followed:

- Tagged as UNSERVICEABLE (UNS) using a UNS tag.
- UNS tape may only be used in locations where dedicated storage areas for damaged ULDs **do not** exist. The use of UNS tape **does not** remove the requirement to use the UNS tag. One piece of UNS tape shall be applied across the face of the container but shall not be applied directly on top of the documents pouch. For pallets, one piece of UNS tape shall be applied to the top surface of the pallet in a diagonal direction from one corner to the other.
- Flagged on the LDM as UNS
- Flagged as ‘Damaged’ and add additional info into RUM+
- Forwarded to the nearest repair station

UNS ULDs may be transported by air, provided the following criteria are met:

- Must **fit contour** of aircraft without causing damage
- Must be able to **lock into position**
- Must **be empty**
- Must **be tagged as unserviceable**

UNCONTROLLED DOCUMENT (05 DECEMBER 2024 12:47:13)

UNCONTROLLED DOCUMENT

For more information on the transportation of Damaged ULD's, see the ULD Serviceability Criteria Checklist.

For more information on the UNS Tag procedure, follow the link (*UNS Tag Procedure*):

https://connect.dpdhl.com/content/page/623807ebd16e293a59855535

Note: You may need to copy and paste the link into your browser for it to appear correctly.

To order UNS tags:

• Login or register on OSO link : **https://oso.dhl.com/dhluser/en**

• Item code: L9020SL (UNS tag)

All orders are dispatched as per OSO procedures.

For all ULD repair enquiries, please contact Global Network Equipment Group on:

E-mail: global.uld.repair@dhl.com

Phone: +49 228 182 20805

A full listing of approved repair stations can be found on the Global Network Equipment Smartconnect site (*DHL ULD Approved Repair Vendors*):

https://connect.dpdhl.com/content/page/623807ebd16e293a59855535

Note: You may need to copy and paste the link into your browser for it to appear correctly.

3. **Commercial ULDs**

Damaged commercial ULDs are to be repaired by their owners or designated handling agents. Following rules have to be respected:

- All UNS commercial ULDs shall be returned to corresponding airline / handling agent.

4. **Pallet Nets**

- Damaged pallet nets with more than 12 months remaining life time shall be sent to a DHL approved ULD repair station. Damaged pallet nets with less than 12 months remaining life time shall be disposed of as per local recycling procedures.
- Pallet nets which are beyond their date of expiration shall be disposed of as per local recycling procedures.
- Damaged non-DHL pallet nets shall be returned to their owner.

In case of any doubts, contact **global.uld.repair@dhl.com**.

5. **Straps**

- Damaged / expired (unserviceable) DHL straps shall be disposed of as per local recycling procedures.
- Damaged non-DHL straps shall be returned to their owner.

In case of any doubts, contact **global.uld.repair@dhl.com**.

UNCONTROLLED DOCUMENT (05 DECEMBER 2024 12:47:13)

UNCONTROLLED DOCUMENT

6.25 List of ULD Types

It is strongly recommended to check under each operators DHLAGOM Aircraft Technical Specification document to see exactly which ULDs are loadable on a given aircraft/operator combination.

The following link provides access to the ULD Weights and Dimensions tables containing information on all DHL ULDs (*DHL ULD Dimensions Weights*):

https://connect.dpdhl.com/content/page/623807ebd16e293a59855535

Note: You may need to copy and paste the link into your browser for it to appear correctly.

Below is a table with common Pallet types which travel in the network but are not currently owned by DHL.

Note: Exact details such as tare weight, max gross weight and loadability shall be derived from the specific ULD in question. The details below are indicative only.

IATA Code	Base Dimensions	Description of ULD	Tare Weight incl. (..) for Pallet Net in kg and *lbs*	Max. Gross Weight kg and *lbs*	Loadable on following aircraft	MD	LD FWD	LD AFT
PKC	60.4 x 61.5" (1.53 x 1.56 m)	LD3 Pallet	60 (5) *132 (11)*	1588 *3500*	A300 B747 B757SF B767, B777, MD11	No No Yes* No	Yes No No Yes	Yes Yes No Yes
PLA PLW	60.4 x 125" (1.53 x 3.18 m)	LD Pallet with side extension	154 (10) *340 (22)*	3175 *7000*	A300, B767 B747, MD-11	No	Yes No	Yes Yes
PMW	96 x 125" (2.44 x 3.18 m)	P6 Pallet with side extensions	167 (15) *368 (33)*	6804 *15000*	A300B4, B757, B767 A300-600, B747, B777	Yes Yes	No Yes	No Yes
PMS		P6 Heavy duty pallet	163 (15) *359 (33)*	9030 *19900*				
PZA	196 x 96" (4.98 x 2.44 m)	16 feet Pallet	330 (25) *727 (55)*	11340 *25000*	B747, B767, B777, MD11	Yes	No	No
PGE	238.5 x 96" (6.06 x 2.44 m)	20 feet pallet	535 (25) *1179 (55)*	13608 *30000*	B747, B777, MD11	Yes	No	No
PGX		20 feet car transport platform	950 *2094*					

* Positions QL/QR Only

UNCONTROLLED DOCUMENT (05 DECEMBER 2024 12:47:13)

UNCONTROLLED DOCUMENT

6.25.1 Examples of Commonly used Container Types

The following chapter covers a number of the most commonly used Containers in the DHL Express network. It is not, however, a complete list of all available Containers. See the latest ULD Dims and Weights document published by GNEG (**https://connect.dpdhl.com/content/page/623807ebd16e293a59855535**).

1. **Main-deck Containers**

AAA

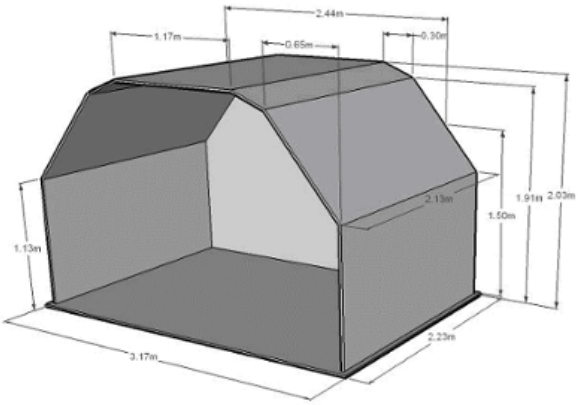

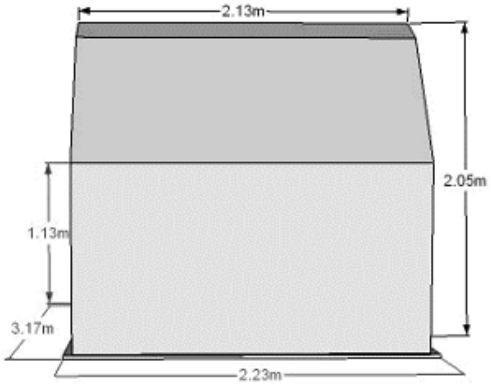

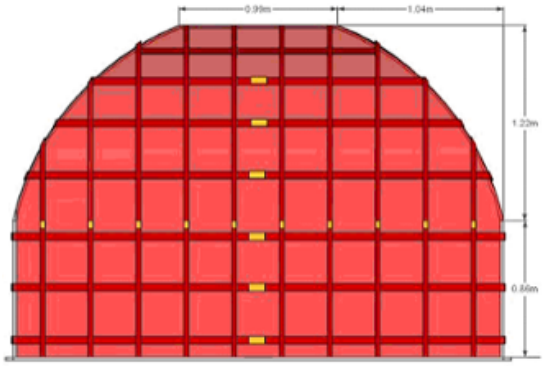

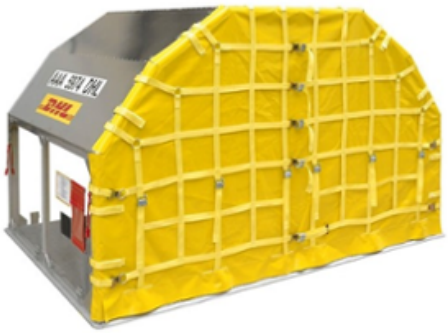

Base Dimension	**224cm x 317.5cm / 88in x 125in**
Typical Height:	**203cm / 80in**
Typical Tare weight:	**270kg / 595lbs**
Typical Max Gross Weight:[1]	**6804kg / 15000lbs**
Typical Volume:	**11.75m³ / 415ft³**
Aircraft type:	**A300, A321, A330, B777, B767, B757, B747, B737**
Manufacturers:	**See latest Weights & Dims document here.**

1: Maximum ULD gross weight could exceed the allowed position weight on the aircraft. Always check the aircraft weight & balance manual for the maximum weight allowed on each position.

UNCONTROLLED DOCUMENT (05 DECEMBER 2024 12:47:13)

UNCONTROLLED DOCUMENT

UNCONTROLLED DOCUMENT

UNCONTROLLED DOCUMENT

AAC/LAY

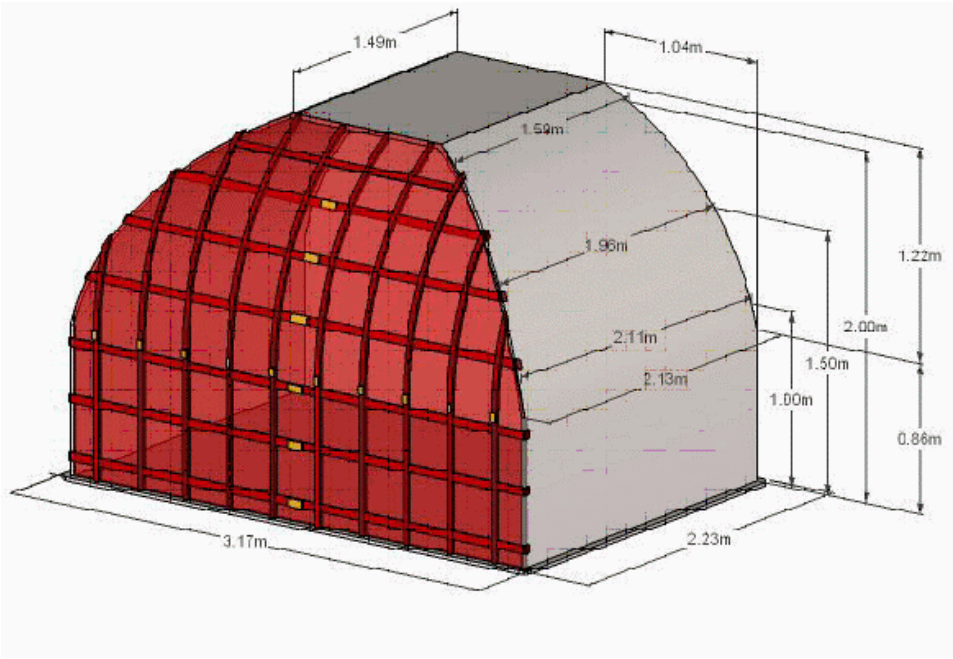

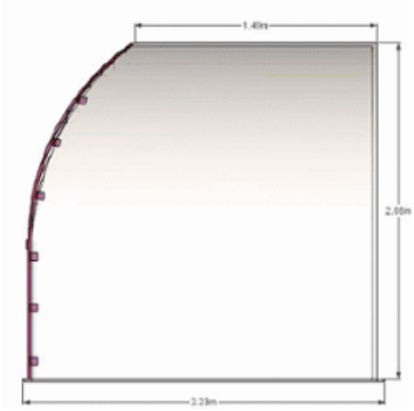

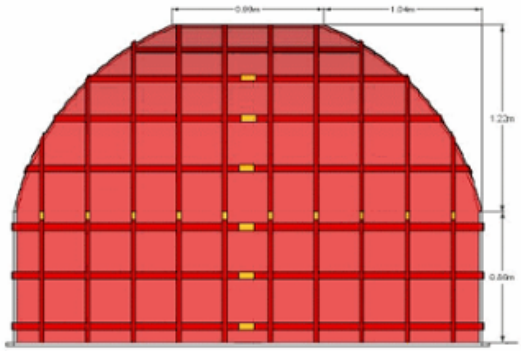



Base Dimension	**224cm x 317.5cm / 88in x 125in**
Typical Height:	**203cm / 80in**
Typical Tare weight:	**270kg / 595lbs**
Typical Max Gross Weight:[1]	**6804kg / 15000lbs**
Typical Volume:	**11.25 m³ / 397 ft³**
Aircraft type:	**A300, A321, A330, B777, B767, B757, B747, B737**
Manufacturers:	**See latest Weights & Dims document here.**

1: Maximum ULD gross weight could exceed the allowed position weight on the aircraft. Always check the aircraft weight & balance manual for the maximum weight allowed on each position.

UNCONTROLLED DOCUMENT (05 DECEMBER 2024 12:47:13)

UNCONTROLLED DOCUMENT

UNCONTROLLED DOCUMENT

UNCONTROLLED DOCUMENT

AAX

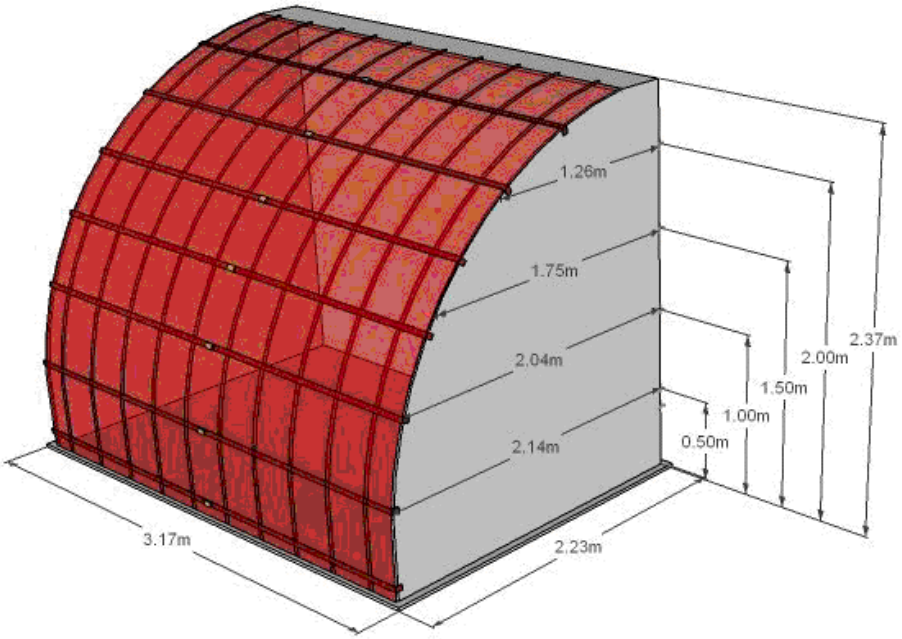

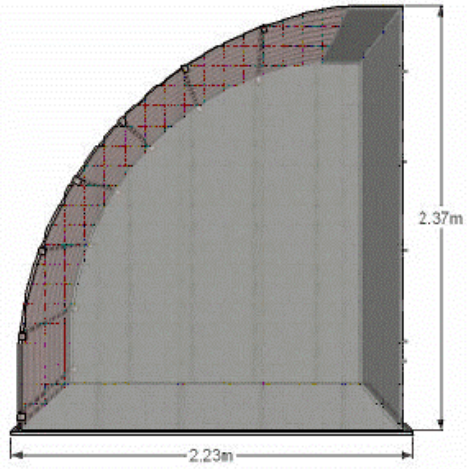

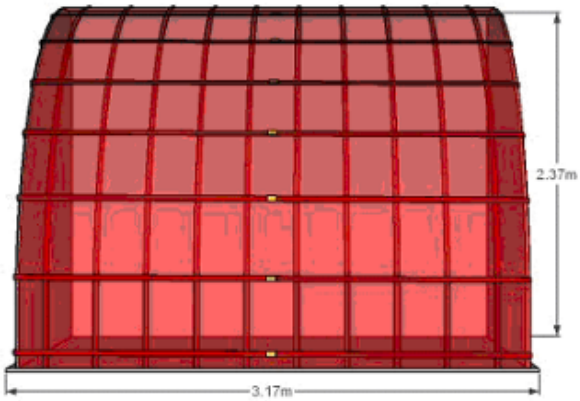

Base Dimension	**224cm x 317.5cm / 88in x 125in**
Typical Height:	**244cm / 96in**
Typical Tare weight:	**270kg / 595lbs**
Typical Max Gross Weight:[1]	**6804kg / 15000lbs**
Typical Volume:	**14.3m³ / 505ft³**
Aircraft type:	**A300, A330, B747, B767, B777**
Manufacturers:	**See latest Weights & Dims document here.**

1: Maximum ULD gross weight could exceed the allowed position weight on the aircraft. Always check the aircraft weight & balance manual for the maximum weight allowed on each position.

UNCONTROLLED DOCUMENT (05 DECEMBER 2024 12:47:13)

UNCONTROLLED DOCUMENT

AMJ

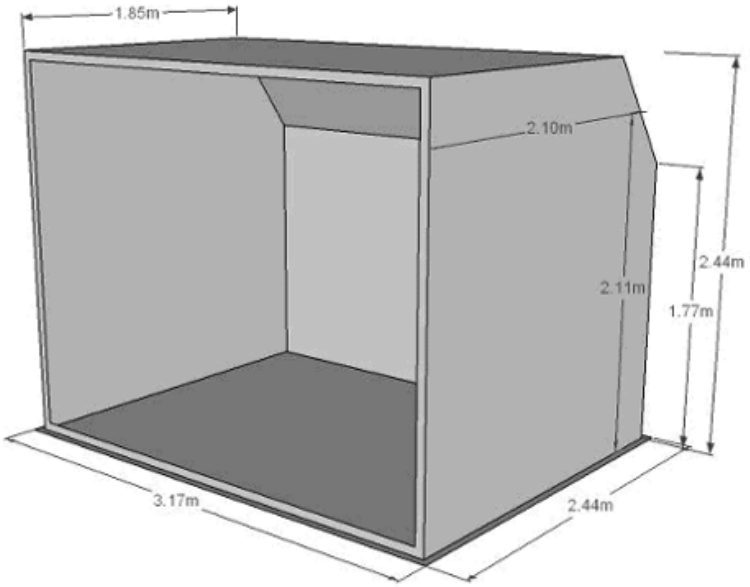

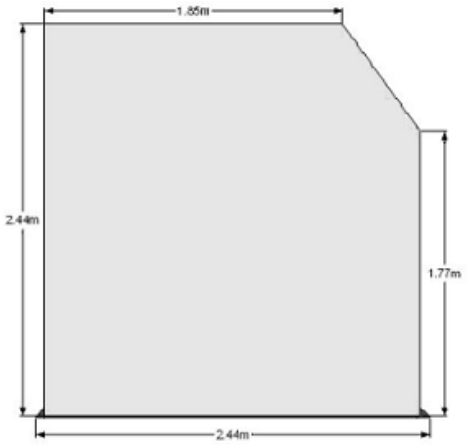

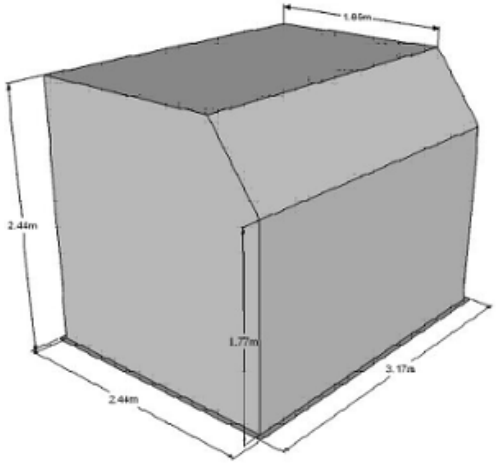



Base Dimension	**317.5cm x 244cm / 125in x 96in**
Typical Height:	**244cm / 96in**
Typical Tare weight:	**307kg / 677lbs**
Max Gross Weight:[1]	**6804kg / 15000lbs**
Typical Volume:	**16.8 m³ / 593 ft³**
Aircraft type:	**A300, A330, B747, B767, B777,**
Manufacturers:	**See latest Weights & Dims table here.**

1: Maximum ULD gross weight could exceed the allowed position weight on the aircraft. Always check the aircraft weight & balance manual for the maximum weight allowed on each position.

UNCONTROLLED DOCUMENT (05 DECEMBER 2024 12:47:13)

UNCONTROLLED DOCUMENT

HMJ

ULD to transport Horses or larger animals

ULD has one specific end to always point in flight direction and can therefore be adjusted to right or left side fit by folding in/out top corners at the right and left long side. ULD is typically flown with AMJ contour; however, can be flown with both sides folded out as AMA contour.

Typical tare weight: 1 1400 kg / 3100 lbs





UNCONTROLLED DOCUMENT

UNCONTROLLED DOCUMENT

UNCONTROLLED DOCUMENT (05 DECEMBER 2024 12:47:13)

UNCONTROLLED DOCUMENT

UNCONTROLLED DOCUMENT

UNCONTROLLED DOCUMENT

AMX

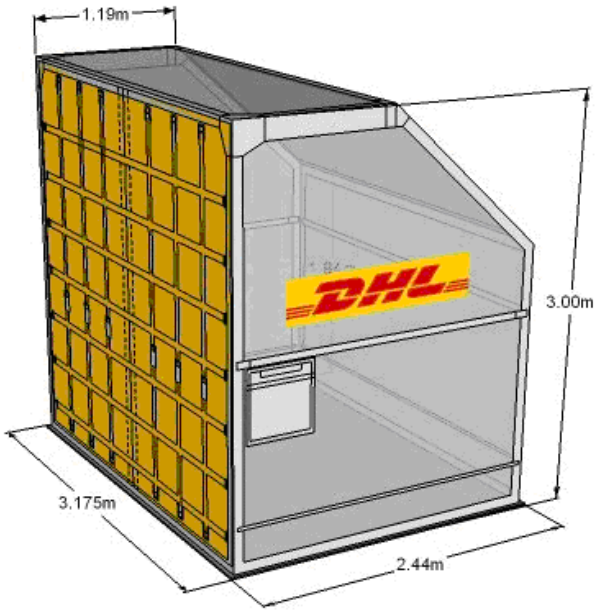







Base Dimension	**317.5cm x 244cm / 125in x 96in**
Typical Height:	**300cm / 118in**
Typical Tare weight:	**515kg / 1135lbs**
Max Gross Weight:[1]	**6804kg / 15000lbs**
Typical Volume:	**19.94m³ / 704ft³**
Aircraft type:	**B747, B777**
Manufacturers:	**See latest Weights & Dims document here.**

1: Maximum ULD gross weight could exceed the allowed position weight on the aircraft. Always check the aircraft weight & balance manual for the maximum weight allowed on each position.

UNCONTROLLED DOCUMENT (05 DECEMBER 2024 12:47:13)

UNCONTROLLED DOCUMENT

UNCONTROLLED DOCUMENT

UNCONTROLLED DOCUMENT

ABZ

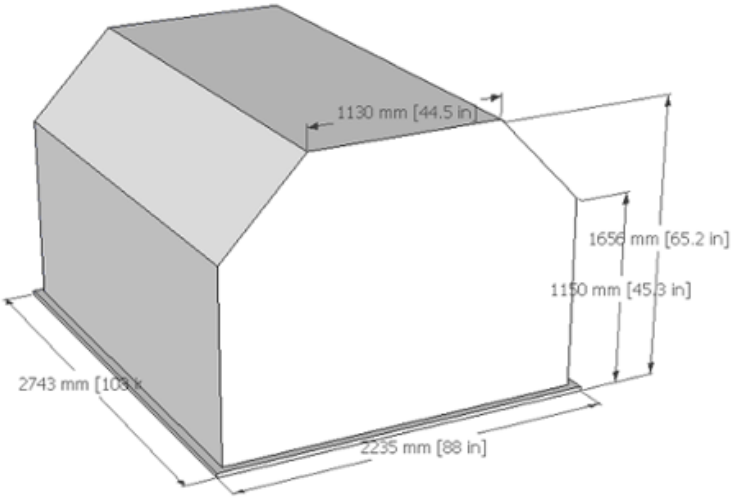

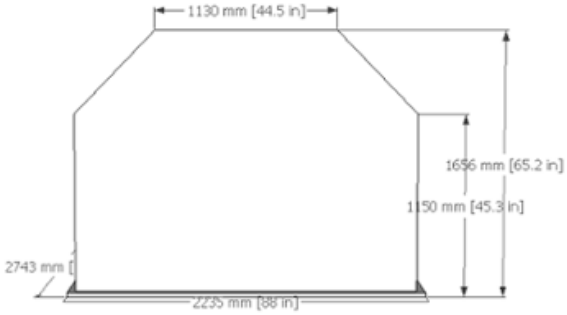





Base Dimension	**274.3cm x 223.5cm / 108in x 88in**
Height:[1]	**165,6cm / 65.2in**
Tare weight:[1]	**218kg / 481lbs**
Max Gross Weight:[2]	**3,780kg / 8,333lbs**
Volume: [1]	**8.1m³ / 286ft³**
Aircraft type:	**ATR 72**
Manufacturers:	**VRR**

1: Container dimensions, weights and volumes may vary according to manufacturer. Above weights are for guidance only. Please ensure you refer to the TSO (Technical Standard Order) of the actual container to be used.

2: Maximum Gross Weight can exceed position weight on aircraft – always check against the aircraft weight & balance manual.

UNCONTROLLED DOCUMENT (05 DECEMBER 2024 12:47:13)

UNCONTROLLED DOCUMENT

5. **Main-deck and Lower-deck Containers**

AAJ/AAK

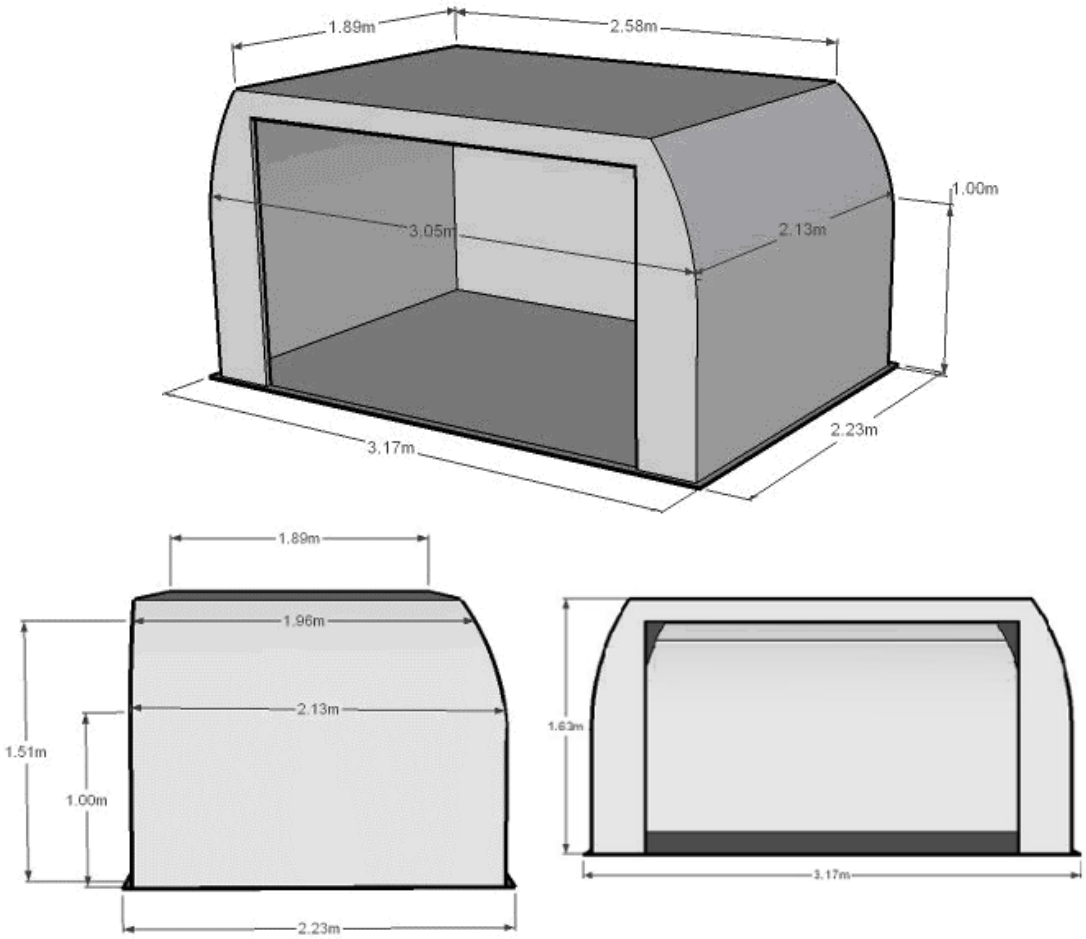



Base Dimension	**224cm x 317.5cm / 88in x 125in**
Typical Height:	**162.5cm / 64in**
Typical Tare weight:	**251kg / 553lbs**
Max Gross Weight:[1]	**6804kg / 15000lbs**
Typical Volume:	**10.3m³ / 364ft³**
Aircraft type:	**A300, A321, A330, B777, B767, B757, B747, B737,**
Manufacturers:	**See latest Weights & Dims table here.**

1: Maximum ULD gross weight could exceed the allowed position weight on the aircraft. Always check the aircraft weight & balance manual for the maximum weight allowed on each position.

UNCONTROLLED DOCUMENT (05 DECEMBER 2024 12:47:13)

UNCONTROLLED DOCUMENT

3. **Lower-deck ULDs**

AKE

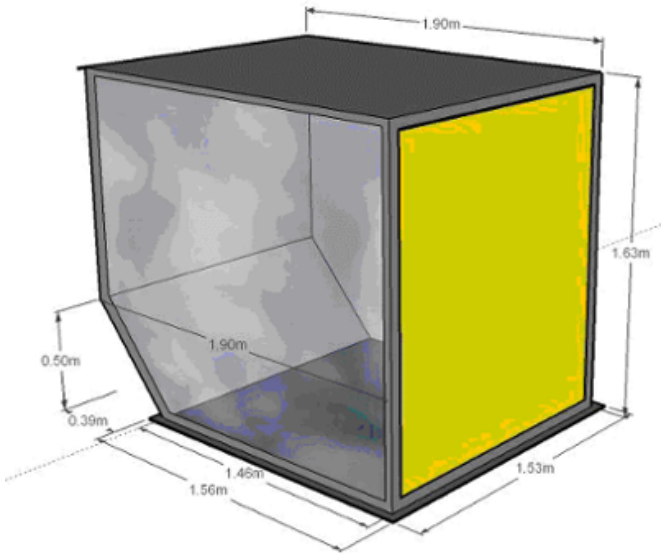

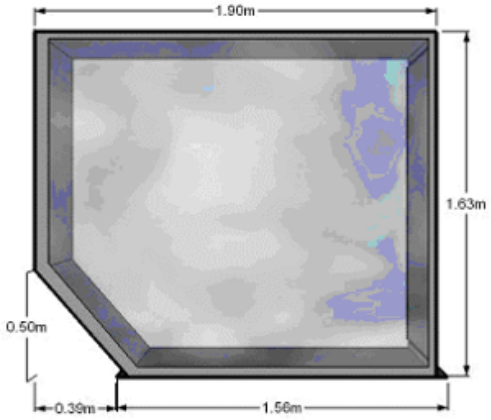

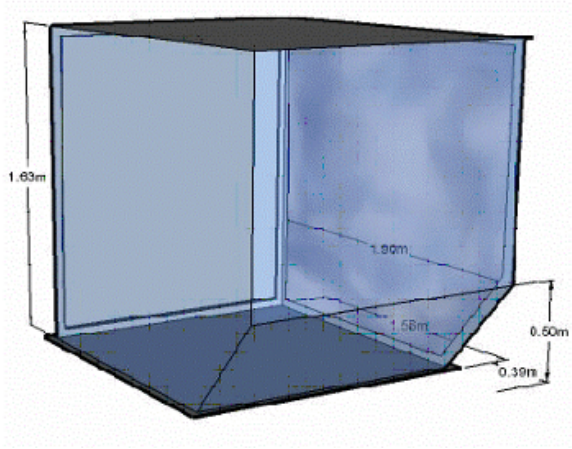



Base Dimension	**153cm x 156cm / 60.4in x 61.5in**
Typical Height:	**162.5cm / 64in**
Typical Tare weight:	**90kg / 198lbs**
Max Gross Weight:[1]	**1588kg / 3500lbs**
Typical Volume:	**4.3m³ / 120ft³**
Aircraft type:	**A300, A330, B747, B757SF, B767, B777**
Manufacturers:	**See latest Weights & Dims document here.**

1: Maximum ULD gross weight could exceed the allowed position weight on the aircraft. Always check the aircraft weight & balance manual for the maximum weight allowed on each position.

UNCONTROLLED DOCUMENT (05 DECEMBER 2024 12:47:13)

UNCONTROLLED DOCUMENT

UNCONTROLLED DOCUMENT

UNCONTROLLED DOCUMENT

DQF

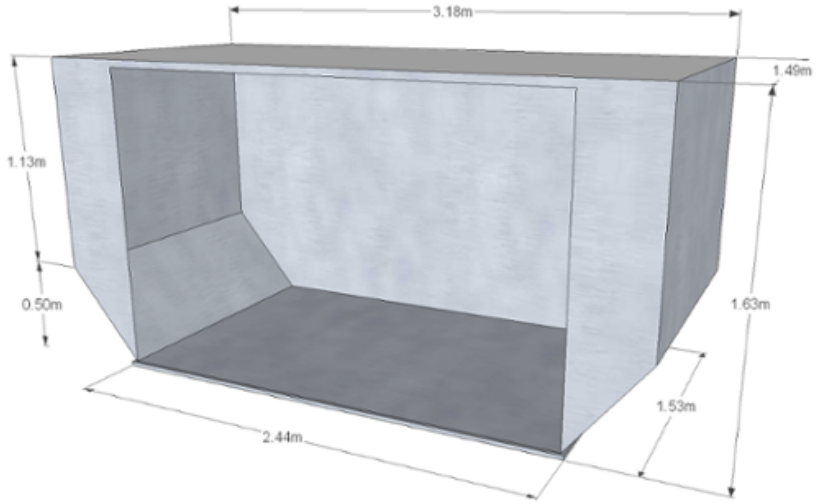

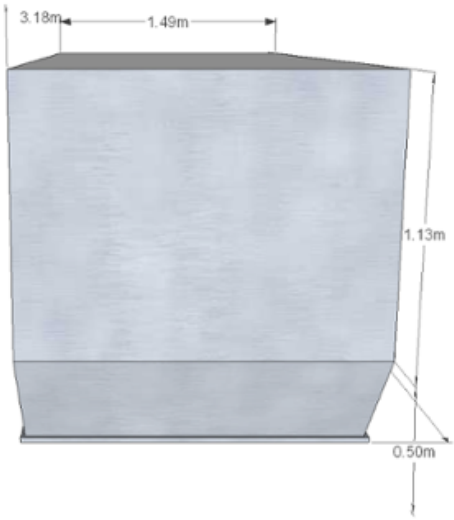

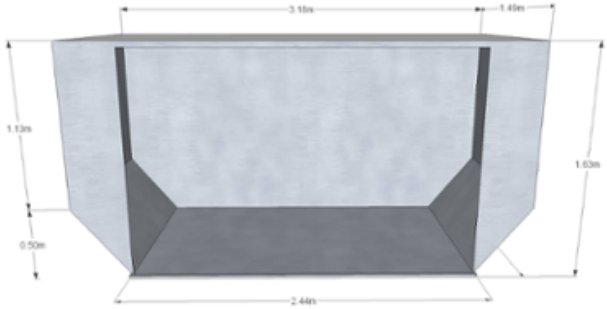



Base Dimension	**244cm X 153cm / 96in x 60.4in**
Typical Height:	**162.5cm / 64in**
Typical Tare weight:	**136kg / 300lbs**
Max Gross Weight:[1]	**2449kg / 5400lbs**
Typical Volume:	**7.3m³ / 258ft³**
Aircraft type:	**B767**
Manufacturers:	**See latest Weights & Dims document here.**

1: Maximum ULD gross weight could exceed the allowed position weight on the aircraft. Always check the aircraft weight & balance manual for the maximum weight allowed on each position.

UNCONTROLLED DOCUMENT (05 DECEMBER 2024 12:47:13)

UNCONTROLLED DOCUMENT

DQN

Forklift able DQF ULD

DQN ULDs are used as flyaway kit ULDs with fixed lockable doors and specific interior to accommodate transportations of aircraft spares and tools.

Typical tare weight: 1 260 kg / 573 lbs





UNCONTROLLED DOCUMENT

UNCONTROLLED DOCUMENT

UNCONTROLLED DOCUMENT (05 DECEMBER 2024 12:47:13)

UNCONTROLLED DOCUMENT

4. **125”/60.4” (LD11) Lower-deck ULDs**

ALP

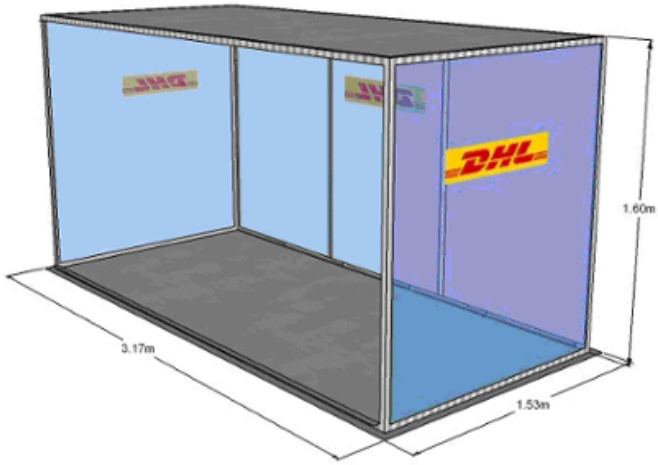

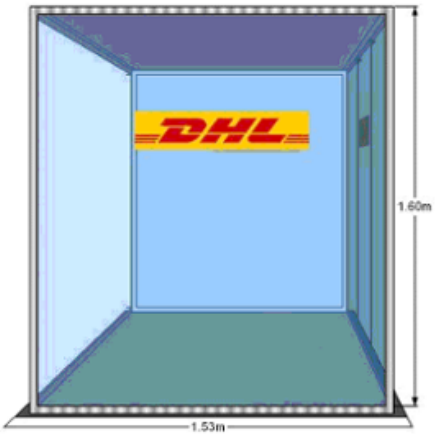

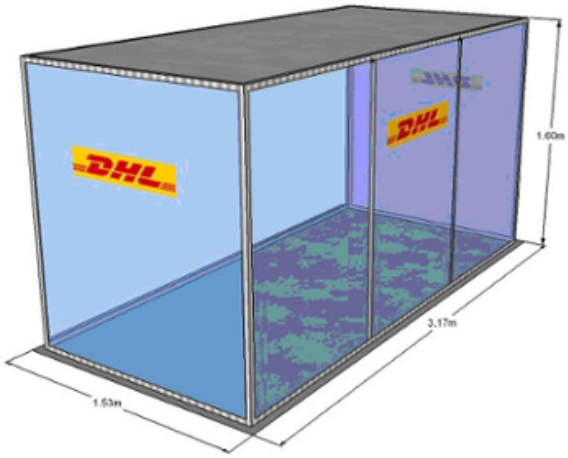



Base Dimension	**153cm x 317.5cm / 60.4in x 125in**
Typical Height:	**162.5cm / 64in**
Typical Tare weight:	**158kg / 348lbs**
Max Gross Weight:[1]	**3175kg / 7000lbs**
Typical Volume:	**7.1m³ / 251ft³**
Aircraft type:	**A300, A330, B777, B747**
Manufacturers:	**See latest Weights & Dims document here.**

1: Maximum ULD gross weight could exceed the allowed position weight on the aircraft. Always check the aircraft weight & balance manual for the maximum weight allowed on each position.

UNCONTROLLED DOCUMENT (05 DECEMBER 2024 12:47:13)

UNCONTROLLED DOCUMENT

6.26 ULD Inventory Control

6.26.1 Introduction

ULD inventory is an important component of the operational network as it ensures that the correct ULD stocks are available at the correct location. This ensures that the maximum capacity of each handling unit (e.g. aircraft/truck) can be utilised on all movements, whilst maintaining compliance with operator and regulatory requirements.

Uncontrolled movement of ULDs may have a significant financial impact due to non-visibility of unserviceable ULDs moving throughout the network and/or potential loss of the asset.

ULD inventories cover both internal (DHL owned) ULDs as well as 3rd party ULDs and therefor require constant management.

All ULDs which have been leased to DHL require management/control to ensure visibility throughout the network in order for them to be returned to the lessor as/when required.

6.26.2 ULD Control

A daily stock check of ULDs held at every location within the network shall be conducted every day within set time frames. The result of the physical check is then compared against the electronic ULD inventory control application (RUM) to identify and discrepancies (see **6.28.1 - Purchasing**, point 1).

DHLs ULD management system (RUM) enables ULD management over the entire DHL network, including Third Party.

The management of ULDs is directly linked with the continuous development of the DHL network and is controlled in conjunction with Global Network Management, Global Network Equipment Group and Global Airside.

The global management/control of ULDs is performed via the RUM application.

https://rum.dhl.com/login.jsp

The system allows ULD Track & Tracing, HUB management and reporting based on load messages and manual updates and is linked to other network control applications (e.g. SABLE, NMIV and CALMS).

For full details of how to operate the RUM application, refer to the User Guide which can be found under the *Help* menu within the RUM application.

UNCONTROLLED DOCUMENT

UNCONTROLLED DOCUMENT

UNCONTROLLED DOCUMENT (05 DECEMBER 2024 12:47:14)

UNCONTROLLED DOCUMENT

6.26.3 Managing Station Inventory

NCG rely on daily local ULD inventory reporting from all locations to control the flow and capacity across the network, as well as planning for maintenance and purchasing. If the ULD inventory reports are not conducted, a major service failure due to lack of ULDs could occur.

1. **ULD Stock Check**

Accurate stock checks are essential to prevent incorrect data in RUM (ULD locations unconfirmed) which can then lead to the loss of our assets.

Local ULD control is responsible for conducting the daily stock check within the agreed time frame.

Example in LEJ: stock checking within the warehouse is carried out by the sort department and beyond the warehouse it is performed by the ramp department.

The stock check due time of all regions is mentioned in the below table:

Region	Due Time (UTC)
Asia Pacific	0200
Europe	1300
Middle East & North Africa	1000
Sub-Saharan Africa	1300
Americas	2145

Daily stock checks are conducted to ensure that the ULDs RUM reports as being available at a particular facility are confirmed by a physical (visual) check. As well as confirming the availability of the ULD (and the loading status), they must also be assessed for damages (refer to **6.24.3 - ULD Inspection** and **6.29 - ULD Handling Appendices** – ULD Serviceability Criteria Checklist)

UNCONTROLLED DOCUMENT

UNCONTROLLED DOCUMENT

UNCONTROLLED DOCUMENT (05 DECEMBER 2024 12:47:14)

UNCONTROLLED DOCUMENT

2. **RUM Updating**

There are two methods to conduct stock checks:

1. Partly automated – usage of LOUIS (Local Online ULD Inventory System) scanner
2. Manually - usage of check lists from RUM (station inventory list).

Option 1: Partly automated.

First of all the scanner must be booted and prepared for operations. All structural ULDs shall be scanned during the stock check of the entire facility, ensuring no ULD is missed. Pallets identification shall be keyed into the device using the scanner key pad. LOUIS scanners can work online (connected to local WIFI) as well as offline. While working offline the device must be connected to the internet after the stock check is completed and before the time out limit in RUM (2 hours).

All ULDs are captured directly with the LOUIS scanner into RUM. A stock check data point with the respective location is then created in RUM. When prompted, answer the pop-up questions related to loading and serviceability. ULDs without barcodes must be entered manually into RUM.

After the stock check process is completed, the data (scanned ULDs) is uploaded into RUM. Then all uploaded data is checked in the RUM “upload verification” screen, with any resulting errors (e.g. ULDs not existing in RUM) being available for correction.

For more information regarding LOUIS application, please contact **globaluldctrl@dhl.com**.

Option 2: Manually - (not using LOUIS scanners)

A ULD inventory list can be created for the location via RUM. This will list all ULDs which are currently at the location (according to RUM). These ULDs must then be physically identified and ticked off the sheet as they are located. Once an entire search of the facility is completed, these ULD numbers are verified in RUM and the inventory list is updated.

ULD verification checks can take place once the ULD stocks have been manually updated.

More information regarding stock check procedures can be found within the help section in RUM. For any other questions, you can contact Global ULD Control directly at **(globaluldctrl@dhl.com**).

UNCONTROLLED DOCUMENT (05 DECEMBER 2024 12:47:14)

UNCONTROLLED DOCUMENT

6.26.4 Transferring ULDs to/from Other Parties

1. **ULD Control Receipt (UCR) Procedure**

When a unit load device (ULD) is transferred, the transferring party shall complete a ULD Control Receipt (UCR).

A ULD Control Receipt (UCR) shall be completed when:

1. Transferring a DHL ULD (loaded or empty) to any Third Party outside of the DHL network.
2. Returning an empty Third Party ULD to its owner, or the handling agent representing the ULD owner.
3. Returning ULD equipment that was on lease to DHL to the ULD owner, or handling agent representing the owner.

Once the UCR Form has been completed in full and confirmed by DHL and the Receiving Party, the UCR details must be entered into RUM within 12 hours of the UCR being completed and the ULDs being physically transferred.

It is the responsibility of the location where the ULD transfer takes place to ensure the UCR procedure is followed. Failure to do so will result in the location where the transfer takes place being held responsible in case the ULDs do not return to the DHL network within 60 days.

The location transferring the ULDs to third parties is responsible to ensure compliance to the global ULD KPI for With External ULDs. Global compliance target for this KPI is set at 90% of all With External ULDs to have days external <14.

2. **Creating a UCR**

A UCR can be created in two ways:

1. Directly in RUM using the station overview screen – system generated UCR.
2. A printed UCR template can be filled out and the UCR record created in RUM. A scanned copy of the printed UCR must be uploaded to the UCR record created in RUM and the physical copy needs to be archived for 6 months

The completed UCR shall be confirmed by the receiving party using the system generated e-mail or by signing the printed and filled out UCR template.

UNCONTROLLED DOCUMENT

UNCONTROLLED DOCUMENT

UNCONTROLLED DOCUMENT (05 DECEMBER 2024 12:47:14)

UNCONTROLLED DOCUMENT

ULD CONTROL RECEIPT

UCR No.

TRANSFERRING PARTY
Name
Address
Email
Transferred By

RECEIVING PARTY
Name
Address
Email
Received By

LOCAL DATE / TIME OF TRANSFER											
Day		Month		Year				Time			

TRANSFER POINT		

FINAL DEST.		

#	ULD ID Type	Serial No.	Owner	D *	Supp Eq ** N	S	SB
1							
2							
3							
4							
5							
6							
7							
8							
9							
10							
11							
12							
13							
14							
15							

#	ULD ID Type	Serial No.	Owner	D *	Supp Eq ** N	S	SB
16							
17							
18							
19							
20							
21							
22							
23							
24							
25							
26							
27							
28							
29							
30							

* D = Damage ** Support Equipment : N = Net; S = Straps; SB = Spreader Boards;

Damage Description

Remarks

TRANSFERRING PARTY	
Signature	
Name	Date / Time

RECEIVING PARTY	
Signature	
Name	Date / Time

UNCONTROLLED DOCUMENT

UNCONTROLLED DOCUMENT

UNCONTROLLED DOCUMENT (05 DECEMBER 2024 12:47:14)

UNCONTROLLED DOCUMENT

6.26.5 Lease ULD Control

1. **Lease ULD Request**

If a ULD shortfall has been identified that cannot be resolved through Regional and/or Global ULD balancing, then Global ULD Control shall raise a lease request to Global Network Equipment Group (GNEG) to cover the shortfall in ULD availability.

GNEG will arrange the lease contract with ACL Airshop at the nearest location to where the ULDs are required within the DHL network. Confirmation on lease ULD ID's and delivery/collection point will be confirmed by GNEG.

It is the responsibility of the Regional ULD Control receiving the lease ULDs to ensure the individual lease ID's are blocked and relocated correctly in the ULD Management System (RUM) so that the lease ULDs can be tracked for return to ACL Airshop under UCR.

Lease ULDs shall only be used on the DHL network. Lease ULDs shall not be provided to 3rd parties for build-up nor used for Commercial Air Linehaul (CAL) uplift.

2. **Lease ULD Handling**

Lease ULDs from ACL Airshop can be recognised through the suffixes "FF" or "JG" (e.g. PAJ12345FF, AKH98765JG).
PMC & PAG/PAJ pallets are leased with a certified pallet net which must stay with the lease pallet at all times. **Do not use DHL pallet nets with lease pallets from ACL Airshop.**

Lease ULDs are subject to the same ULD Serviceability criteria as DHL ULDs. All lease ULDs found to be unserviceable are to be returned to the nearest ACL Airshop station under UCR.

3. **Lease ULD Return**

When a location receives a lease ULD, the following must be applied:

1. All lease ULDs are to be segregated and stacked according to the DHL Pallet Stack process for direct return to ACL Airshop under UCR.
2. The lease ULD is to be uplifted on the network according to the Lease ULD Return Matrix.
3. On instruction by Regional ULD Control, the lease ULD can be used for shipment build-up and uplift on the DHL network.
4. All DHL equipment (nets, straps, spreader boards) shall be removed from all lease ULDs before return to ACL Airshop.

A list of ACL Airshop locations and the Lease ULD Return Matrix can be found here:

https://connect.dpdhl.com/content/page/623807ebd16e293a59855535

UNCONTROLLED DOCUMENT (05 DECEMBER 2024 12:47:14)

UNCONTROLLED DOCUMENT

6.27 Serviceability of Loading Material

The guidelines as issued by the manufacturers have been used to derive the limits for serviceability of Loading Equipment as mentioned in this Chapter of the manual. The limits thus represent the lowest common denominator for allowed equipment. Limits other than those outlined in this manual may be employed, provided they are within the limits set by the manufacturer and airline.

The serviceability criteria for ULDs (containers, pallets and pallet nets) are documented within the ULD Serviceability Criteria checklist. The checklist can be found here (*UCC Card*), as well as up to date ULD dimensions and weight restrictions:

https://connect.dpdhl.com/content/page/623807ebd16e293a59855535

Note: You may need to copy and paste the link into your browser for it to appear correctly.

The ULD Serviceability Criteria Checklist is currently available in the following languages:

- English
- German
- Italian
- Spanish
- French

The following provides guidelines to the serviceability of Loading Material such as ULDs, Straps, Pallet and Spider Nets. Damage beyond these limits is to be considered as Major, the unit withdrawn from use.

Details concerning pallet nets, tie down straps, corner ropes, spreaders and single and double studs can be found in the Aviation Network Supplies catalogue and can be ordered by downloading the DHL Aviation Network Supplies order form, both can be found via the link below:

https://connect.dpdhl.com/content/page/62380eeaf1351d691b64f8b2

Note: You may need to copy and paste the link into your browser for it to appear correctly.

UNCONTROLLED DOCUMENT

UNCONTROLLED DOCUMENT

UNCONTROLLED DOCUMENT (05 DECEMBER 2024 12:47:14)

UNCONTROLLED DOCUMENT

6.27.1 Pallet Nets

1. **DHL Owned Pallets**

DHL pallets net can be identified by the 'DHL' logo on the pallet net label(s).

Pallet nets must meet all the criteria as stated in the ULD Serviceability Criteria Checklist.

Pallet and net are considered as one, which means they always travel together, whether the net is used or not.

The serviceable lifetime of a net can be defined using the following criteria:

a) If Pallet net has Expiry date shown on label, then this shall be the validity.
b) If Pallet net has no Expiry date shown on the label, then validity shall be 3 years from date of manufacture

Shown on Pallet net label		Validity (to be used until)
Expiry Date	Date of Manufacture	
Yes	Yes	Expiry date shown on label*
No	Yes	3 years from Date of Manufacture

*If the expiry date on the net just shows a month and year, the pallet net remains valid until the end of that month.

A pallet net consists of a number of components, including four corner ropes, in case one of these corner ropes is missing or damaged, it is permitted for stations to replace any missing corner ropes with serviceable corner ropes supplied by DHL, these can be ordered as per **6.29 - ULD Handling Appendices**.

No other pallet net repairs are authorised to be carried out by DHL staff.

When an unserviceable pallet net has been identified, this shall be handled in accordance with **6.24.4 - Handling Damaged or Unserviceable Loading Equipment**.

2. **Leased / Foreign Pallets**

Leased 16ft and/or 20ft pallets e.g. PRA / PGA are not required to travel with a pallet net unless the profile of the shipment requires it. Where a leased pallet has been leased with a net, this pallet net shall travel with pallet at all times, irrespective of if it is in use or not. If a DHL pallet net has been used as part of the pallet build up, this pallet net shall be removed before the pallet is returned to the owner.

3. **Foreign Nets**

Any non-DHL owned (foreign) nets which meets the serviceability criteria may be used as long as they are serviceable and the approved net type for the pallet in use.

UNCONTROLLED DOCUMENT (05 DECEMBER 2024 12:47:14)

UNCONTROLLED DOCUMENT

6.27.2 Straps

It is permitted to use both DHL owned and non-DHL owned (foreign) straps within the DHL network.

1. **DHL Owned Straps**

All DHL owned straps are rated to 5000lbs / 2268kg.

DHL straps can be identified by the 'DHL' logo on the strap label(s).

DHL owned straps are rated to the following capacities:

G force	Capacity	
	Kg	Lbs
1.5	2250	5000
3	1125	2500
9	375	830

Straps must meet all the serviceability criteria as stated below:

- Legible, printed manufacturer data label
- No damaged or missing hook, stud or tensioning device
- No cut or tear exceeding 2 mm (0.08 in)
- No torn, missing or broken stitches
- No oil or grease on the webbing which allows the strap to slip inside the tensioning device
- Not exceed the serviceable life-time limits*

In case one of the above conditions has been exceeded, the tie-down strap is no longer serviceable. It shall be taken out of service and handled as per **6.24.4 - Handling Damaged or Unserviceable Loading Equipment**.

The serviceable lifetime of a strap can be defined using the following criteria:

a) If strap has Expiry date shown on label, then this shall be the validity.
b) If strap has no Expiry date shown on the label, then validity shall be 2 years from date of manufacture

Shown on Strap Label		Validity (to be used until)
Expiry Date	Date of Manufacture	
Yes	Yes	Expiry date shown on label*
No	Yes	2 years from Date of Manufacture

*If the expiry date on the net just shows a month and year, the strap remains valid until the end of that month.

2. **Foreign Straps**

Any non-DHL owned (foreign) strap which meets the serviceability criteria above may be used as long as they are rated to the same restraint capacity (5,000lbs / 2268kg).

UNCONTROLLED DOCUMENT (05 DECEMBER 2024 12:47:14)

UNCONTROLLED DOCUMENT

6.27.2.1 ETSO/TSO C172 Certified Straps

Where straps have been used as the means of primary restraint, they shall be ETSO/TSO C172 certified. Certified straps can be identified by the following details appearing on the label:

- Date of Expiry and,
- 'ETSO/TSO C172' clearly printed

As with all network equipment, certified straps shall only be used if they are in serviceable condition.

Note: Non-certified straps are manufactured in accordance with ISO 16049-1:2013 and IATA ULD Specifications 60/2.

Examples of the Certified and Non-Certified straps can be found below:

ETSO/TSO C172 certified strap



Non-certified strap

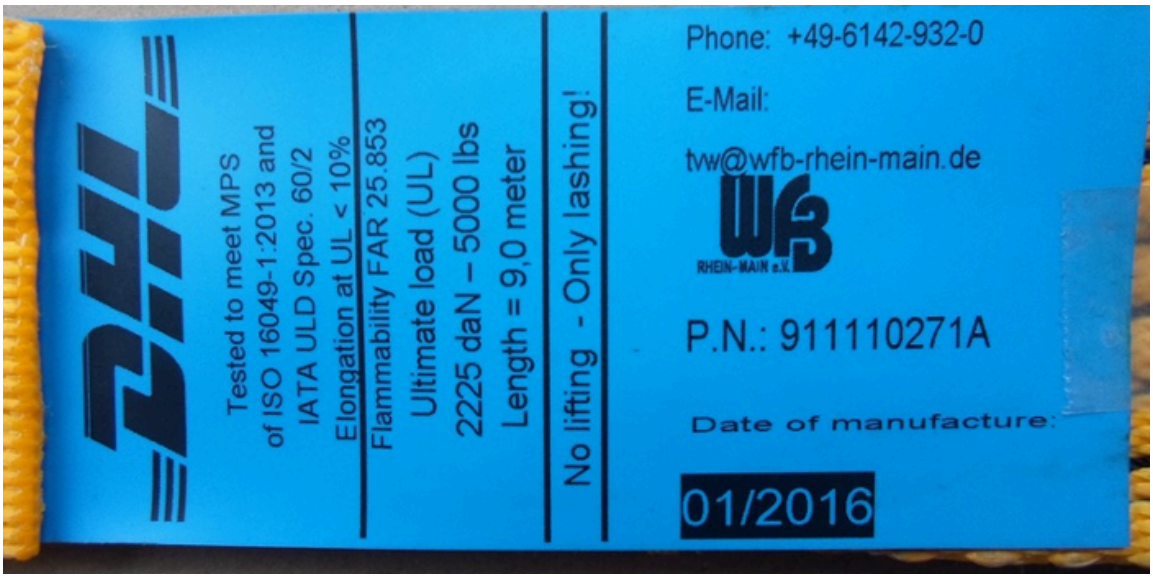

UNCONTROLLED DOCUMENT (05 DECEMBER 2024 12:47:14)

UNCONTROLLED DOCUMENT

6.27.3 Security Ropes

Security ropes must meet all the criteria listed below in order to be serviceable:

- They are not torn or cut
- Have no torn fibres

6.27.4 Tie-down Fittings

1. **Double Studs**

Double studs with ring (tie down fittings with ring) must meet all the criteria listed below in order to be serviceable:

- Must have 'ISO9788' clearly imprinted on the fitting.
- They are not damaged or distorted in any way
- No parts of the ring are missing
- The ring is not open

2. **Single Studs**

Single studs with ring (tie down fittings with ring) must meet all the criteria listed below in order to be serviceable:

- They are not damaged or distorted in any way
- No parts of the ring are missing
- The ring is not open

UNCONTROLLED DOCUMENT

UNCONTROLLED DOCUMENT

UNCONTROLLED DOCUMENT (05 DECEMBER 2024 12:47:14)

UNCONTROLLED DOCUMENT

6.27.5 Cargo Stopper (Spider Net)

DHL Owned Cargo Stoppers (Spider nets) must meet all the criteria listed below in order to be serviceable:

- Legible, printed manufacturer data label
- No damaged or missing ring(s)
- No torn, missing or broken stitches
- No cut or tear exceeding 2 mm (0.08 in) on the strap
- No hole, cut or tear exceeding 5 cm (2 in) on the net cover
- No oil or grease on the webbing which allows the strap to slip during use
- Must be within its serviceable life-time limit*

*The serviceable lifetime of a Cargo stopper can be defined using the following criteria:

a) If Cargo stopper has Expiry date shown on label, then this shall be the validity.
b) If Cargo stopper has no Expiry date shown on the label, then validity shall be 5 years from date of manufacture

Shown on Cargo stopper label		Validity (to be used until)
Expiry Date	Date of Manufacture	
Yes	Yes	Expiry date shown on label*
No	Yes	5 years from Date of Manufacture

*If the expiry date on the net just shows a month and year, the cargo stopper remains valid until the end of that month.

In case one of the above conditions has been exceeded, the spider net is no longer serviceable. It shall be taken out of service and Global Network Supplies (**global.network.supplies@dhl.com**) shall be contacted for further instructions.

Damaged / expired (unserviceable) DHL cargo stoppers shall be disposed of as per local recycling procedures.

UNCONTROLLED DOCUMENT

UNCONTROLLED DOCUMENT

UNCONTROLLED DOCUMENT (05 DECEMBER 2024 12:47:14)

UNCONTROLLED DOCUMENT

6.28 ULD Management

6.28.1 Purchasing

1. **Certified ULDs**

All new/used/certified/non-certified ULDs purchased by DHL must comply with the following criteria:

- Certified ULDs: FAA/EASA E/TSO C90
- Non-certified ULDs: TSO standard
- Delivered directly from manufacturer or certified ULD repair shop

2. **Documentation**

All ULDs purchased by DHL must comply with the following:

- Certified ULDs: delivered with authorized release certificate (Form 1/ Form 8130)
- Non-certified ULDs: delivered with CoC (Certificate of Conformity)
- Standard documentation for ULD to be provided by manufacturer (e. g. CMM=Component Maintenance Manual, IPL or equivalent)

All certification paperwork is to be centrally filed at DHL Global Head Office with Global Network Equipment Group and will be made available to Contract Airlines on request to **global.uld.repair@dhl.com**.

6.28.2 Maintenance

ULD Maintenance and repair shall comply with the following requirements and procedures:

- All repair stations must be approved by a relevant Aviation Authority according to Federal Aviation Regulation, Part 145
- All repair stations must be approved by DHL
- All ULDs must be repaired according to manufacturer’s specificiation (CMM) and DHL ULD repair requirements
- All repaired ULDs must be returned to DHL with an authorized release certificate (Form 1/ Form 8130)

UNCONTROLLED DOCUMENT

UNCONTROLLED DOCUMENT

UNCONTROLLED DOCUMENT (05 DECEMBER 2024 12:47:14)

UNCONTROLLED DOCUMENT

6.29 ULD Handling Appendices

1. **ULD Serviceability Checklist**

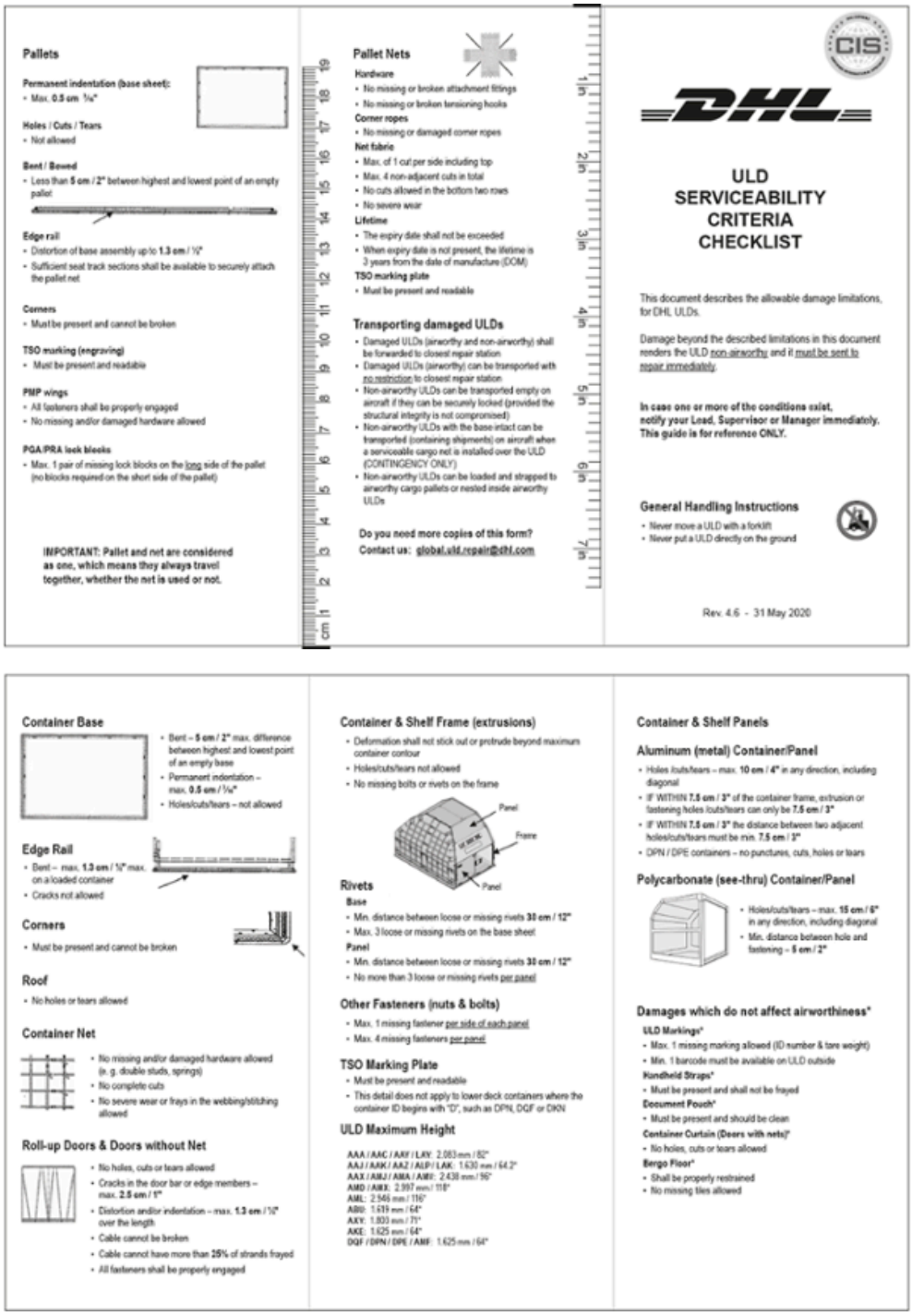

Pallets

Permanent indentation (base sheet):
- Max. **0.5 cm** ¼"

Holes / Cuts / Tears
- Not allowed

Bent / Bowed
- Less than **5 cm / 2"** between highest and lowest point of an empty pallet

Edge rail
- Distortion of base assembly up to **1.3 cm** / ½"
- Sufficient seat track sections shall be available to securely attach the pallet net

Corners
- Must be present and cannot be broken

TSO marking (engraving)
- Must be present and readable

PMP wings
- All fasteners shall be properly engaged
- No missing and/or damaged hardware allowed

PGA/PRA lock blocks
- Max. 1 pair of missing lock blocks on the long side of the pallet (no blocks required on the short side of the pallet)

IMPORTANT: Pallet and net are considered as one, which means they always travel together, whether the net is used or not.

Pallet Nets

Hardware
- No missing or broken attachment fittings
- No missing or broken tensioning hooks

Corner ropes
- No missing or damaged corner ropes

Net fabric
- Max. of 1 cut per side including top
- Max. 4 non-adjacent cuts in total
- No cuts allowed in the bottom two rows
- No severe wear

Lifetime
- The expiry date shall not be exceeded
- When expiry date is not present, the lifetime is 3 years from the date of manufacture (DOM)

TSO marking plate
- Must be present and readable

Transporting damaged ULDs
- Damaged ULDs (airworthy and non-airworthy) shall be forwarded to closest repair station
- Damaged ULDs (airworthy) can be transported with no restriction to closest repair station
- Non-airworthy ULDs can be transported empty on aircraft if they can be securely locked (provided the structural integrity is not compromised)
- Non-airworthy ULDs with the base intact can be transported (containing shipments) on aircraft when a serviceable cargo net is installed over the ULD (CONTINGENCY ONLY)
- Non-airworthy ULDs can be loaded and strapped to airworthy cargo pallets or nested inside airworthy ULDs

Do you need more copies of this form?
Contact us: global.uld.repair@dhl.com

ULD SERVICEABILITY CRITERIA CHECKLIST

This document describes the allowable damage limitations, for DHL ULDs.

Damage beyond the described limitations in this document renders the ULD non-airworthy and it must be sent to repair immediately.

In case one or more of the conditions exist, notify your Lead, Supervisor or Manager immediately. This guide is for reference ONLY.

General Handling Instructions
- Never move a ULD with a forklift
- Never put a ULD directly on the ground

Rev. 4.6 - 31 May 2020

Container Base
- Bent – **5 cm / 2"** max. difference between highest and lowest point of an empty base
- Permanent indentation – max. **0.5 cm / ¼"**
- Holes/cuts/tears – not allowed

Edge Rail
- Bent – max. **1.3 cm / ½"** max. on a loaded container
- Cracks not allowed

Corners
- Must be present and cannot be broken

Roof
- No holes or tears allowed

Container Net
- No missing and/or damaged hardware allowed (e. g. double studs, springs)
- No complete cuts
- No severe wear or frays in the webbing/stitching allowed

Roll-up Doors & Doors without Net
- No holes, cuts or tears allowed
- Cracks in the door bar or edge members – max. **2.5 cm / 1"**
- Distortion and/or indentation – max. **1.3 cm** / ½" over the length
- Cable cannot be broken
- Cable cannot have more than **25%** of strands frayed
- All fasteners shall be properly engaged

Container & Shelf Frame (extrusions)
- Deformation shall not stick out or protrude beyond maximum container contour
- Holes/cuts/tears not allowed
- No missing bolts or rivets on the frame

Rivets

Base
- Min. distance between loose or missing rivets **30 cm / 12"**
- Max. 3 loose or missing rivets on the base sheet

Panel
- Min. distance between loose or missing rivets **30 cm / 12"**
- No more than 3 loose or missing rivets per panel

Other Fasteners (nuts & bolts)
- Max. 1 missing fastener per side of each panel
- Max. 4 missing fasteners per panel

TSO Marking Plate
- Must be present and readable
- This detail does not apply to lower deck containers where the container ID begins with "D", such as DPN, DQF or DKN

ULD Maximum Height

AAA / AAC / AAY / LAY: 2.083 mm / 82"
AAJ / AAK / AAZ / ALP / LAK: 1.630 mm / 64.2"
AAX / AMJ / AMA / AMX: 2.438 mm / 96"
AMD / AMX: 2.997 mm / 118"
AAL: 2.946 mm / 116"
ABN: 1.619 mm / 64"
AKY: 1.803 mm / 71"
AKE: 1.625 mm / 64"
DQF / DPN / DPE / AME: 1.625 mm / 64"

Container & Shelf Panels

Aluminum (metal) Container/Panel
- Holes /cuts/tears – max. **10 cm / 4"** in any direction, including diagonal
- IF WITHIN **7.5 cm / 3"** of the container frame, extrusion or fastening holes /cuts/tears can only be **7.5 cm / 3"**
- IF WITHIN **7.5 cm / 3"** the distance between two adjacent holes/cuts/tears must be min. **7.5 cm / 3"**
- DPN / DPE containers – no punctures, cuts, holes or tears

Polycarbonate (see-thru) Container/Panel
- Holes/cuts/tears – max. **15 cm / 6"** in any direction, including diagonal
- Min. distance between hole and fastening – **5 cm / 2"**

Damages which do not affect airworthiness*

ULD Markings*
- Max. 1 missing marking allowed (ID number & tare weight)
- Min. 1 barcode must be available on ULD outside

Handheld Straps*
- Must be present and shall not be frayed

Document Pouch*
- Must be present and should be clean

Container Curtain (Doors with nets)*
- No holes, cuts or tears allowed

Bergo Floor*
- Shall be properly restrained
- No missing tiles allowed

Note: The above image is an example only, for the official version of the ULD Serviceability Criteria Checklist, check the Global Network Equipment Group Smartconnect page:

https://connect.dpdhl.com/content/page/623807ebd16e293a59855535

UNCONTROLLED DOCUMENT (05 DECEMBER 2024 12:47:14)

UNCONTROLLED DOCUMENT

2. **UNS Tag**

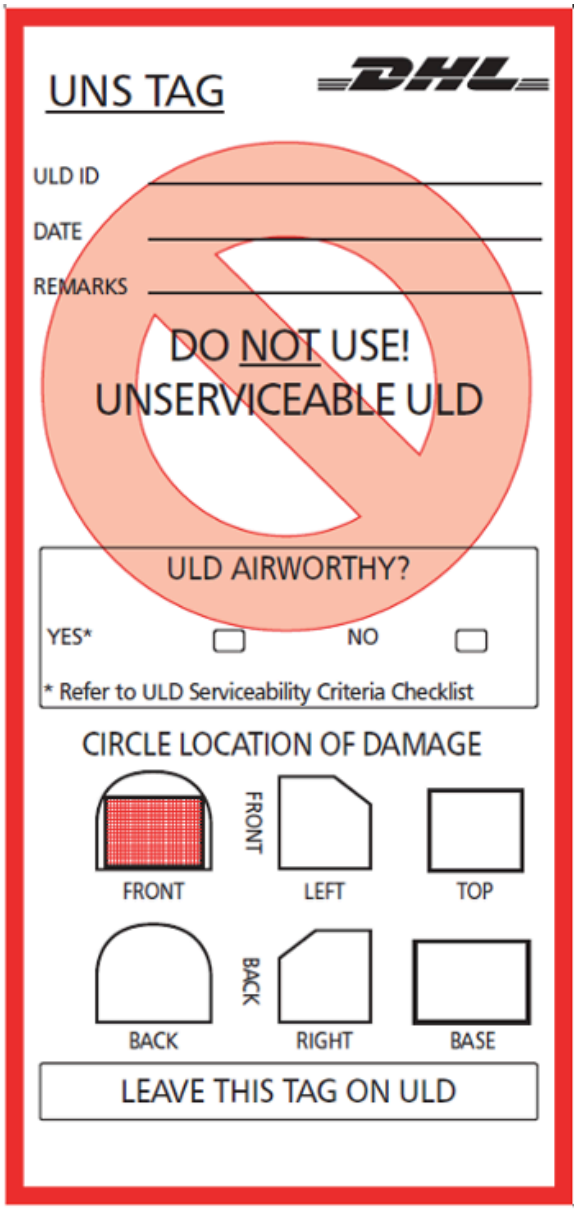

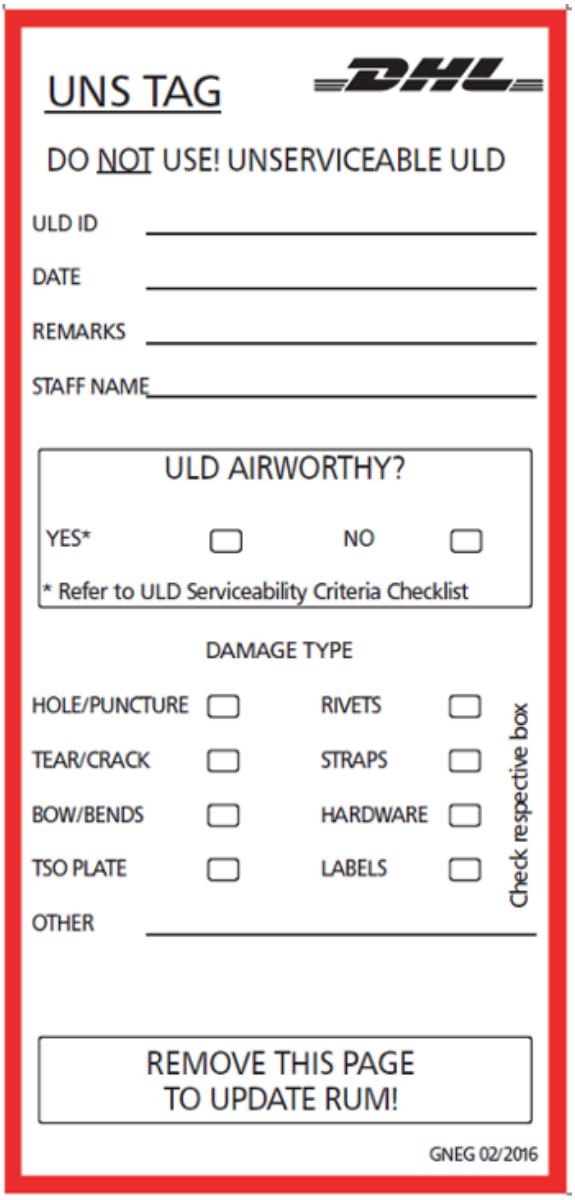

To order UNS tags:

- Login or register on OSO link : **https://oso.dhl.com/dhluser/en**
- Item code: L9020SL (UNS tag)

UNCONTROLLED DOCUMENT (05 DECEMBER 2024 12:47:14)

UNCONTROLLED DOCUMENT

All orders are dispatched as per OSO procedures.

3. **Example ULD TSO Plates**



NORDISK



VRR

UNCONTROLLED DOCUMENT (05 DECEMBER 2024 12:47:14)

UNCONTROLLED DOCUMENT



DoKaSch

UNCONTROLLED DOCUMENT

UNCONTROLLED DOCUMENT

UNCONTROLLED DOCUMENT (05 DECEMBER 2024 12:47:14)

UNCONTROLLED DOCUMENT

4. **Example Pallet Net TSO**



5. **Example Pallet Net Manufacture / Expiry Date Label**



UNCONTROLLED DOCUMENT (05 DECEMBER 2024 12:47:14)

UNCONTROLLED DOCUMENT

6. **Container Components**

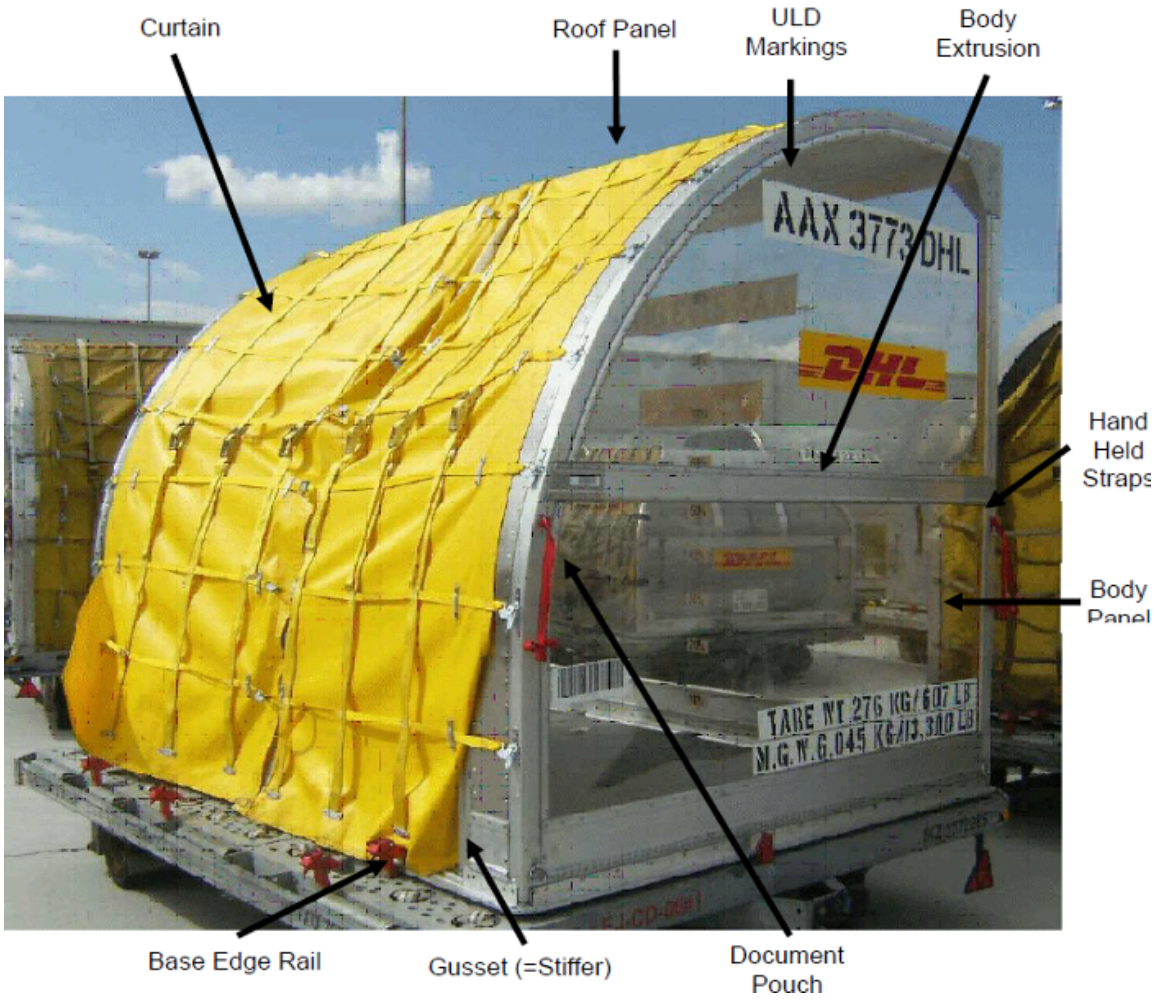

UNCONTROLLED DOCUMENT

UNCONTROLLED DOCUMENT

UNCONTROLLED DOCUMENT (05 DECEMBER 2024 12:47:14)

UNCONTROLLED DOCUMENT

7. **Net Bag Specifications**

Minimum performance standard are as follows:

- 100 cm x 60 cm
- Able to carry up to 50 kg

All net bags shall be purchased locally.

UNCONTROLLED DOCUMENT

UNCONTROLLED DOCUMENT

UNCONTROLLED DOCUMENT (05 DECEMBER 2024 12:47:14)