UNCONTROLLED DOCUMENT

UNCONTROLLED DOCUMENT

TAY B738BCF
ASL Airlines Belgium B737-800BCF

Revision: 3
Date: 27 November 2024

1 ASL Airlines Belgium Boeing 737-800BCF Registrations
2 Aircraft Dimensions
3 Aircraft Servicing Points and Specifications
4 Ground Support Equipment
5 Standard Turnaround Times
6 Safety Areas
7 Strong Wind Conditions
8 Aircraft Door Dimensions
9 Compartment Classification and Air-Conditioning
10 Aircraft Cabin Contour Dimensions
11 Maximum Position Weights
12 Aircraft ULD Compatibility
13 Loading and Un-Loading
14 Rigid, Oversized and Special Loads
15 Restricted Commodities Loading
16 Messaging and Reporting
17 Load Control Data
18 Maximum Package Dimensions

UNCONTROLLED DOCUMENT (27 NOVEMBER 2024 14:15:37)

Page	Date	Comment
13	27 November 2024	ULD types no longer available in the DHL network, removed. *(Minor)*
16	27 November 2024	Guidance on the handling of special loads information added and Global Airside replaced with Special Loads Regional contact. *(Minor)*
17	27 November 2024	Global Airside replaced with Special Loads Regional contact. *(Minor)*

UNCONTROLLED DOCUMENT

UNCONTROLLED DOCUMENT

1. ASL Airlines Belgium Boeing 737-800BCF Registrations

IATA Designator: 3V

ICAO Designator: TAY

Valid for: **OEIMC, OEIMD, OEIWE, OEIWF, OEIXA, OEIWA, OEIWB, OEIWD, OEIXB & OEIXC.**

UNCONTROLLED DOCUMENT
UNCONTROLLED DOCUMENT

2. Aircraft Dimensions

All dimensions in meters

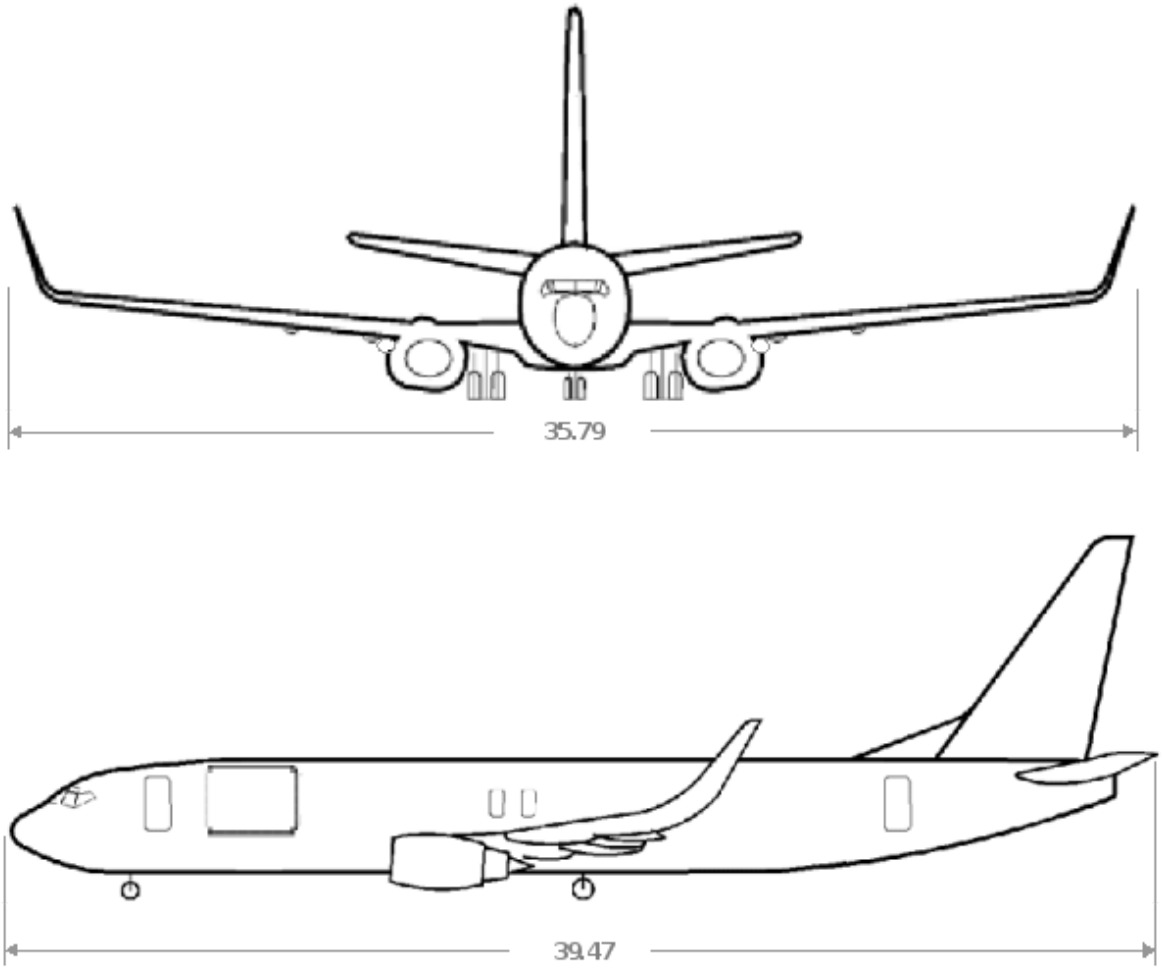

UNCONTROLLED DOCUMENT
UNCONTROLLED DOCUMENT

UNCONTROLLED DOCUMENT (27 NOVEMBER 2024 14:15:37)

UNCONTROLLED DOCUMENT

3. Aircraft Servicing Points and Specifications

3.1 Servicing Points

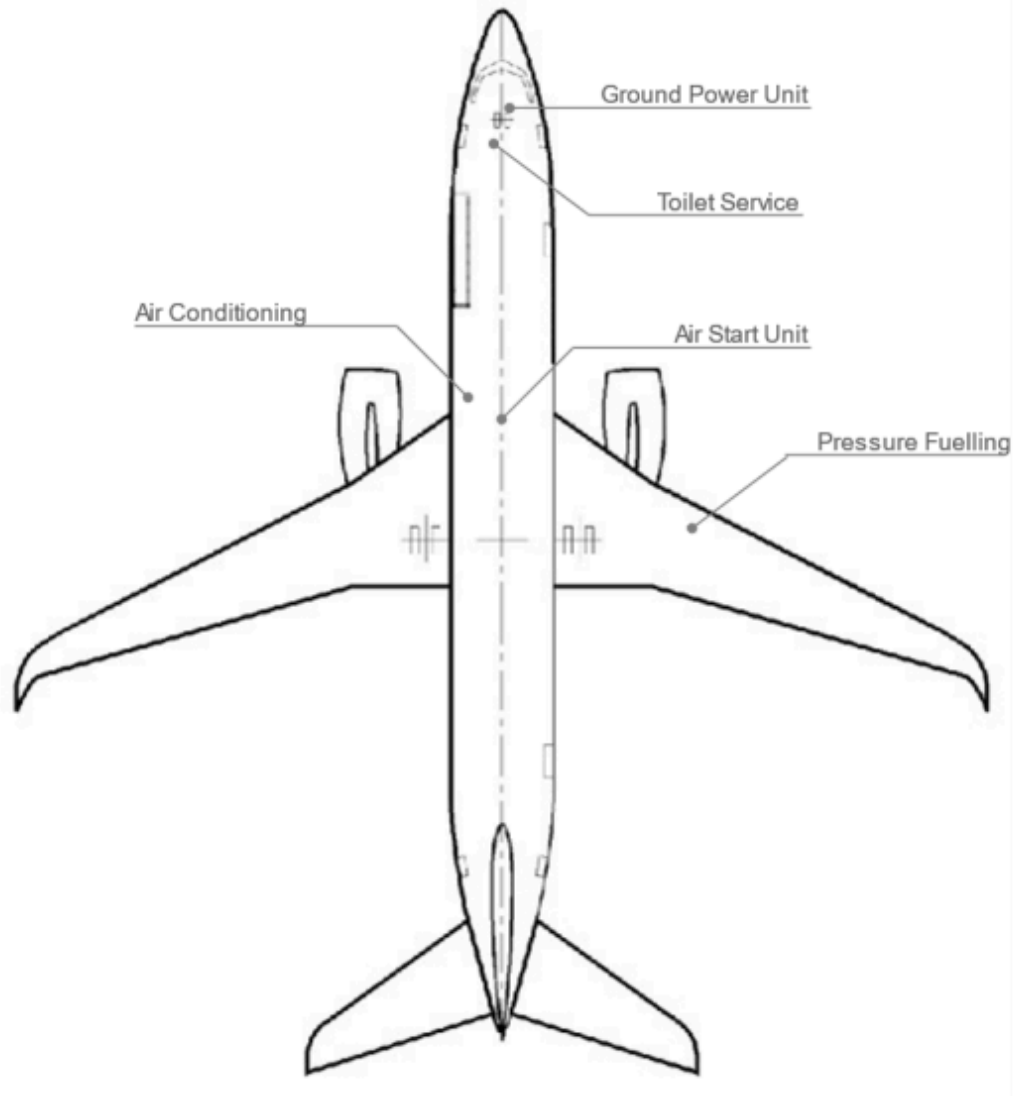

3.2 Servicing Specifications

System	Requirements	Notes
Ground Power Unit	115/200V AC / 60 kVA / 400 Hz	
Fuel	Jet A1	Fuel Control Panel **on RH wing only**
Air Condition Unit	Maximum Flow Rate 210 ppm	1 ACU inlet available
Air Start Unit	Minimum Capacity 120-145 ppm Max. / Min. pressure 45 / 30 psi	1 ASU inlet available.

UNCONTROLLED DOCUMENT (27 NOVEMBER 2024 14:15:37)

4. Ground Support Equipment

4.1 Positioning of GSE

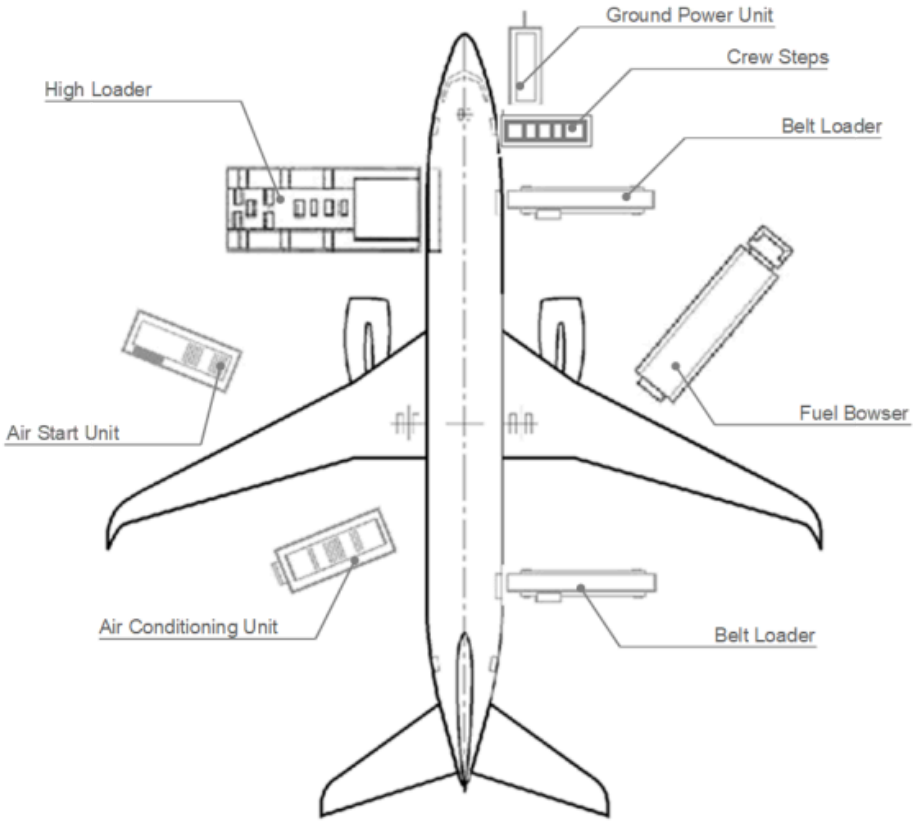

4.2 GSE Requirements

GSE	Type	Quantity
High Loader	Standard	1
Crew stairs	Platform height 2.62 – 2.77 meters	1
Ground Power Unit	Diesel, Electric or Ground-Power	1
Air Start Unit	Standard	1
Belt Loader	Standard	1 or 2
Tractor	N/A	4
Dolly Wagon Main-deck	125”/88” & 60.5”/61.4” capable	Up to 11
Belly Container / Wagon	As required	According to load

UNCONTROLLED DOCUMENT
UNCONTROLLED DOCUMENT

UNCONTROLLED DOCUMENT (27 NOVEMBER 2024 14:15:37)

UNCONTROLLED DOCUMENT

5. Standard Turnaround Times

Turn-around time for a transit stop: 00:35 hour (partial off- and on-load)

Turn-around time for an end stop: 00:50 hour (full off- and on-load)

UNCONTROLLED DOCUMENT

UNCONTROLLED DOCUMENT

UNCONTROLLED DOCUMENT (27 NOVEMBER 2024 14:15:37)

UNCONTROLLED DOCUMENT

6. Safety Areas

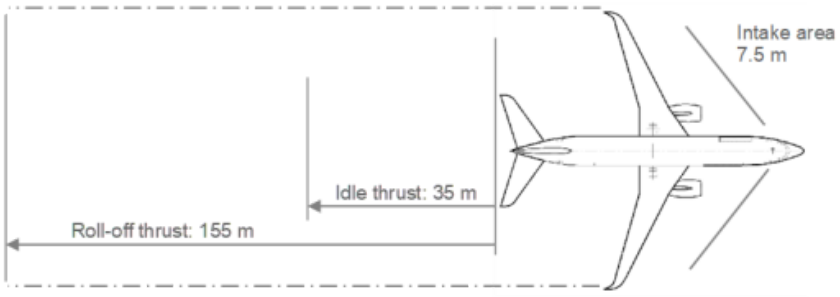

UNCONTROLLED DOCUMENT

UNCONTROLLED DOCUMENT

UNCONTROLLED DOCUMENT (27 NOVEMBER 2024 14:15:37)

UNCONTROLLED DOCUMENT

7. Strong Winds Condition

If the wind conditions on the ramp reach the following speeds, the corresponding actions shall be taken.

Wind Speed	Action
Up to 40 knots	Normal Operations: All doors can be opened and left open
More than 40 knots	Do not open additional doors
More than 60 knots	All open doors shall be closed immediately

UNCONTROLLED DOCUMENT

UNCONTROLLED DOCUMENT

UNCONTROLLED DOCUMENT (27 NOVEMBER 2024 14:15:37)

8. Aircraft Door Dimensions

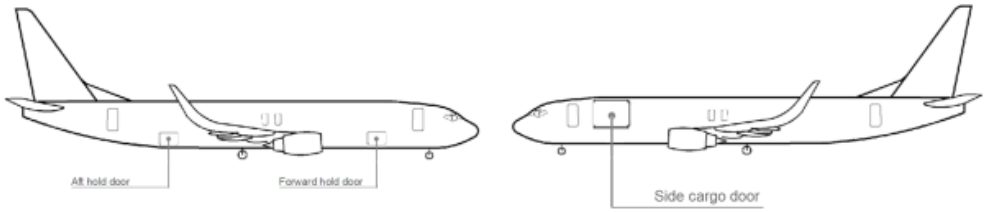

Door width, height, and sill height are defined as follows.

(This drawing is for illustration purposes only and may not be an exact representation of this aircraft type)

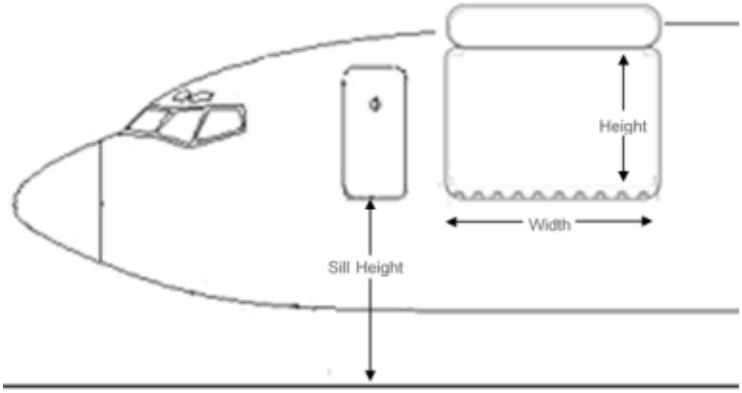

All dimensions are in Inches (in).

Door	Door Width	Door Height	Min. Door Sill Height	Max. Door Sill Height
Crew Door	-	-	103	109
Main Deck	140	85	104	110
Forward Hold	48	35	50	55
Aft Hold	48	35	54	54

UNCONTROLLED DOCUMENT
UNCONTROLLED DOCUMENT

UNCONTROLLED DOCUMENT (27 NOVEMBER 2024 14:15:37)

UNCONTROLLED DOCUMENT

9. Compartment Classification and Air-Conditioning

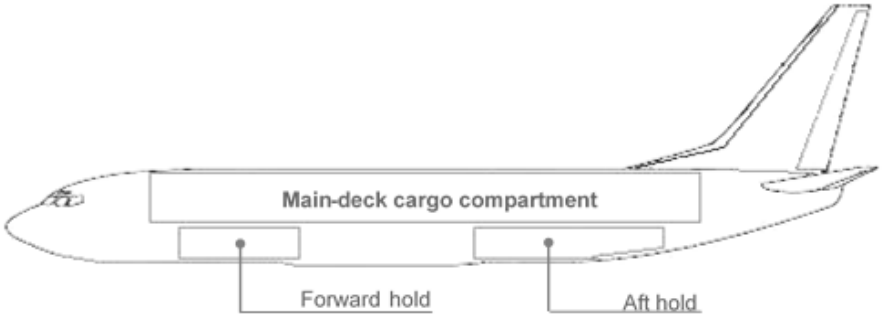

9.1 Compartment Classification

Compartment		Features
Main-deck	Position A loaded with 88" ULD **with** 50 cm (18") aisle	- Classification **B**
		- Pressurisation
		- Smoke Detection
		- **Accessible** during flight
	Position A loaded with 88" ULD **without** 50 cm (18") aisle	- Classification **E**
		- Pressurisation
		- Smoke Detection
		- **In-accessible** during flight
Lower-deck All Compartments		- Classification **C**
		- Pressurisation
		- Smoke Detection
		- Fire Suppression
		- **In-accessible** during flight

9.2 Air-Conditioning

	Main-deck	Forward Hold	Aft Hold
Temperature			
Heating	Yes		
Heat adjust			
Cooling			
Ventilation			

UNCONTROLLED DOCUMENT (27 NOVEMBER 2024 14:15:37)

UNCONTROLLED DOCUMENT

10. Aircraft Cabin Contour Dimensions

10.1 Aircraft Layout

The aircraft is divided into two contour zones: CI and CII.

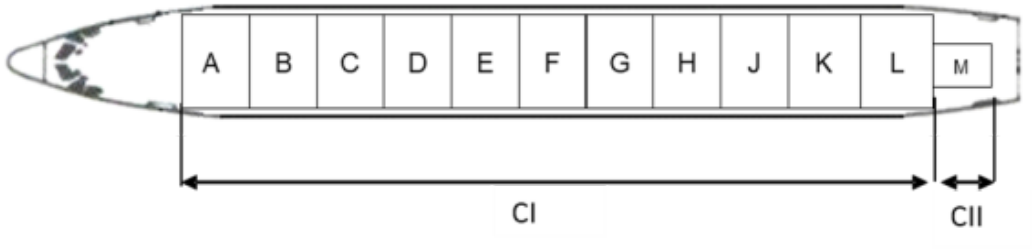

10.1.1 Contour CI

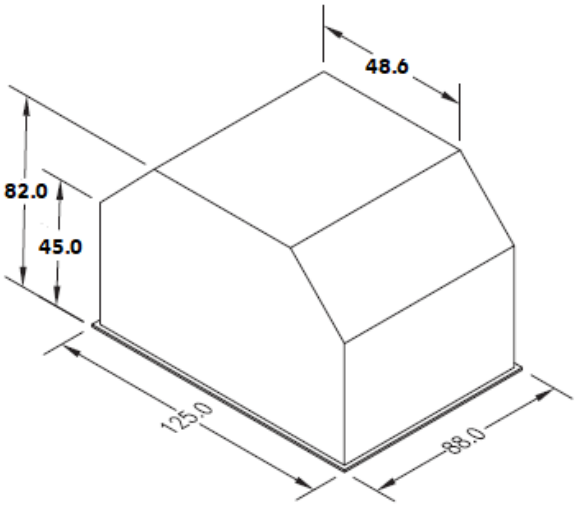

10.1.2 Contour CII

Position M: AKE, RKN, RKE only with the overhang (contoured side) facing aft.

UNCONTROLLED DOCUMENT

UNCONTROLLED DOCUMENT

UNCONTROLLED DOCUMENT (27 NOVEMBER 2024 14:15:37)

UNCONTROLLED DOCUMENT

11. Maximum Position Weights

11.1 Maximum Main-deck ULD Weights in Kilograms

	ULD Position (Max. weight in Kilograms)											
ULD Size	A	B	C	D	E	F	G	H	J	K	L	M
125”/ 88”	2404	2631	2948		4536		2948			2268		
61.5"/60.4"												1558

11.2 Maximum Total Main-deck Load

9G Barrier Limit: 23,630 Kg

11.3 Maximum Lower-deck Compartment Weights in Kilograms

	Fwd hold			Aft Hold		
Compartment	1.1	1.2	1.3	4.1	4.2	4.3
Max. Weight (lbs)	552	336	2670	4086	361	402
Max. Hold Weight (lbs)	3558			4849		
Volume (m3)	18.5			25		

UNCONTROLLED DOCUMENT

UNCONTROLLED DOCUMENT

UNCONTROLLED DOCUMENT (27 NOVEMBER 2024 14:15:37)

UNCONTROLLED DOCUMENT

12. Aircraft ULD Compatibility

12.1 Aircraft Configurations



Configuration1: 11 x Lateral 125”/88” and 1 x 60.4”/61.5”

12.2 ULD Compatibility Table

The following ULD type loading restrictions apply. The ULD type can be loaded on positions marked with a ‘Y’. The ULD type cannot be loaded on positions marked with a ‘N’.

		ULD Type								
	Pos	AAA	AAC	AAJ	AKE	LAK	LAY	PAG	RKN	RKE
Configuration 1	A	Y	Y1	Y	N	Y	Y	Y	N	N
	B	Y	Y1	Y	N	Y	Y	Y	N	N
	C	Y	Y1	Y	N	Y	Y	Y	N	N
	D	Y	Y1	Y	N	Y	Y	Y	N	N
	E	Y	Y1	Y	N	Y	Y	Y	N	N
	F	Y	Y1	Y	N	Y	Y	Y	N	N
	G	Y	Y1	Y	N	Y	Y	Y	N	N
	H	Y	Y1	Y	N	Y	Y	Y	N	N
	J	Y	Y1	Y	N	Y	Y	Y	N	N
	K	Y	Y1	Y	N	Y	Y	Y	N	N
	L	Y	Y1	Y	N	Y	Y	Y	N	N
	M	N	N	N	Y2	N	N	N	Y2	Y2

Y1: Only AAC DHL serial range 9021 and above allowed

Y2: Overhang (contoured side) must face aft.

Note: Pallet stacks not allowed on position L.

UNCONTROLLED DOCUMENT (27 NOVEMBER 2024 14:15:37)

13. Loading and Un-Loading

13.1 Un-Loading Sequence

Step 1: Un-load the aft lower deck.

Step 2: Un-load the ULDs on the main deck in the following numbered sequence, **and respect standard stage un-loading method**.

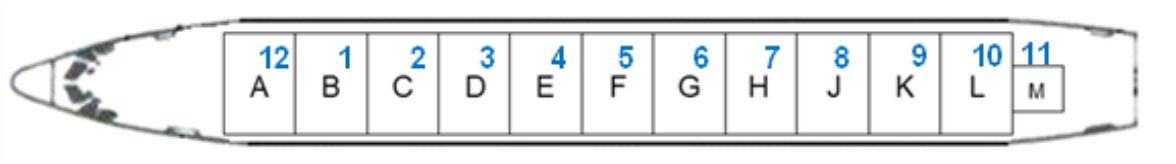

Step 3: Un-load the forward lower deck.

13.2 Loading Sequence

Step 1: Load the forward lower deck.

Step 2: Load the ULDs on the main deck in the following numbered sequence, **and respect standard stage loading method**.

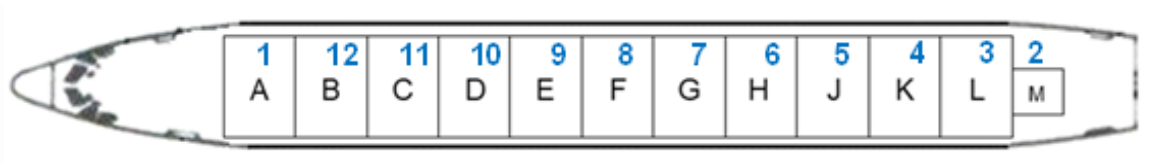

Step 3: Load the aft lower deck.

13.3 Loading Notes

13.3.1 Tail-Tipping

Due care must be taken whilst un-loading and loading the aircraft to prevent the Centre of Gravity moving to a position that would result in tail-tipping. Following the prescribed un-loading and loading sequence is therefore of paramount importance. Furthermore, care must be taken whilst loading the ULDs on the main-deck, moving them at a moderate pace up and down the aircraft to prevent a sudden CoG shift, which may result in a tail-tip situation.

Ensure the ULD in position A weighs at least 1400 kg if the total payload on board the aircraft exceeds 5000 kg.

13.3.2 Tail Post

The use of a tail-post is not permitted on this aircraft.

13.3.3 ULD Clearance

There is very limited clearance between some ULDs and the inner roof lining on this aircraft. ULDs, AAA and AAC/LAY especially, which are even slightly out of contour will impact the roof lining and cause damage. Due care must therefore be exercised when un-loading and loading this aircraft.

UNCONTROLLED DOCUMENT (27 NOVEMBER 2024 14:15:37)

UNCONTROLLED DOCUMENT

13.3.4 Ballast ULD

If a ballast ULD is loaded on the aircraft, this shall not be removed by any member of staff unless the staff member has received specific written instruction to do so from ASL Belgium.

UNCONTROLLED DOCUMENT

UNCONTROLLED DOCUMENT

UNCONTROLLED DOCUMENT (27 NOVEMBER 2024 14:15:37)

14. Rigid, Oversized and Special Loads

For guidance on the handling of special loads, please refer to the Special Loads Regional Contact Instructions outlined in Chapter 6 **6.12.22.3 - Determining Loadability of Special Loads**. Where direct operator approval is required, the Regional Airside Team will liaise with Global Airside as needed.

14.1 Floating / Heavy Pallets

ULDs which are heavier than the standard allowed maximum gross weight may be loaded on the main deck on a floating position.

Permission must be sought from the operator before accepting any ULDs which require loading on a floating position.

The permission, including a special loading instruction, will be granted only after all details concerning the load and the loading have been checked and clarified.

14.2 Crushable Cargo Requirements

Where Rigid Cargo has been identified, the first loaded position on the aircraft shall be loaded with Crushable Cargo ULDs suitable for protecting the barrier wall against unrestrained Rigid Cargo.

When carrying rigid cargo weighing a total of 10,000 lb or more, positions A and B must be loaded with Crushable Cargo ULDs suitable for protecting the barrier wall against unrestrained Rigid Cargo.

14.3 Piercing Cargo

Piercing cargo may not be loaded on the first and last loaded position on the aircraft.

Loading of Piercing Cargo is not allowed in Positions A, L and M.

14.4 Aircraft Engines

Aircraft engines shall be loaded in positions E-F only using a longitudinal 125”/96” engine pallet configuration.

The following engine types are loadable on this aircraft: CFM56-7, CFM56-3

Permission must be sought from your Special Loads Regional contact before accepting aircraft engines.

UNCONTROLLED DOCUMENT
UNCONTROLLED DOCUMENT

UNCONTROLLED DOCUMENT (27 NOVEMBER 2024 14:15:37)

UNCONTROLLED DOCUMENT

14.5 Live Animals

14.5.1 Horses

When horses are carried, horse attendants may be required to ensure the safety of the flight.

14.5.2 Other Live Animals

The following table provides a list of commonly transported animals. If there is a requirement to transport animals not listed below, contact your Special Loads Regional contact.

<table>
<tr><th></th><th>Main-Deck</th><th>FWD Hold</th><th>AFT Hold</th></tr>
<tr><td>Horses*</td><td>Yes</td><td rowspan="3">No</td><td></td></tr>
<tr><td>Day-old chickens</td><td>X</td><td></td></tr>
<tr><td>Monkeys</td><td rowspan="12">X</td><td></td></tr>
<tr><td>Pigs</td><td rowspan="11">X</td><td></td></tr>
<tr><td>Cattle</td><td></td></tr>
<tr><td>Sheep or Goats</td><td></td></tr>
<tr><td>Dogs or Cats</td><td></td></tr>
<tr><td>Small mammals or Birds</td><td></td></tr>
<tr><td>Tropical Fish</td><td></td></tr>
<tr><td>Reptiles or Amphibians</td><td></td></tr>
<tr><td>Eels</td><td></td></tr>
<tr><td>Crustaceans or Molluscs</td><td></td></tr>
<tr><td>Bees</td><td></td></tr>
<tr><td>Hatching eggs</td><td></td></tr>
</table>

* Limited due to air conditioning and accessibility. Only the first container can be accessible, therefore carrying the maximum of 12 horses is only possible if horse container(s) can be walked through.

X: Depends on accessibility, air conditioning and flight duration. Contact your Special Loads Regional contact for more details.

UNCONTROLLED DOCUMENT

UNCONTROLLED DOCUMENT

UNCONTROLLED DOCUMENT (27 NOVEMBER 2024 14:15:37)

15. Restricted Commodities Loading

15.1 Radioactive (RRY), Magnetised (MAG) and Cargo Aircraft Only (CAO)

The following Dangerous Good type loading restrictions apply. The Dangerous Good type can be loaded on positions marked with a 'Y'. The Dangerous Good type cannot be loaded on positions marked with a 'N'.

	Position													
DG Type	A	B	C	D	E	F	G	H	J	K	L	M	FWD	AFT
MAG	N	N	N	N	N	N	N	N	N	N	Y	N	N	N
CAO	Y	Y	Y	Y	Y	Y	Y	Y	Y	Y	Y	N	Y	Y
RRY (max. 50 TI combined)	N	N	Y	Y	Y	Y	Y	Y	Y	Y	Y	Y	N	N
RRY (max. 200 TI combined)	N	N	N	N	Y	Y	Y	Y	Y	Y	Y	Y	N	N

Note: Cargo Aircraft Only (CAO) can be loaded on any Main Deck position from A to M provided they are loaded accessible. Accessible means that:

- The CAO is loaded on a pallet
- All positions forward of the CAO are loaded with 88" pallets with aisle

15.2 Dry Ice

Please see the Global Supplementary Operational Document **Dry Ice Consolidation table** for the current maximum allowed Dry Ice limits.

Dry Ice (ICE) and Live Animals (AVI)

There is no weight limit for the loading of Dry Ice (ICE) together with Live Animals (AVI) on the Main-deck.

15.3 Lithium Batteries

Please see the Global Supplementary Operational Document **Lithium Battery Loadability Consolidation Table** for the current UN3480 Section IA/IB (RBI), UN3090 Section IA/IB (RBM), UN3481 Section I (RLI), UN3091 Section I (RLM) load ability limits.

UNCONTROLLED DOCUMENT
UNCONTROLLED DOCUMENT

UNCONTROLLED DOCUMENT (27 NOVEMBER 2024 14:15:37)

UNCONTROLLED DOCUMENT

16. Messaging and Reporting

16.1 Messaging

Standard messaging rules apply.

16.2 Reporting

Standard reporting rules apply.

UNCONTROLLED DOCUMENT

UNCONTROLLED DOCUMENT

UNCONTROLLED DOCUMENT (27 NOVEMBER 2024 14:15:37)

17. Load Control Data

17.1 Standard Mass Additions

17.1.1 Additional Crew Members (ACM)

Maximum Number of ACMs:	6
Mass of ACM:	85 kg

17.1.2 Fly Away Kit (FAK) and Ballast

Fly Away Kit (FAK):	63kg Comp. 4.3 (included in the DOM/DOI)

Note: As the FAK is included in the DOW/DOI no weight adjustments have to be done in SABLE as it is the operators (or maintenance) responsibility to substitute any removals with other means and communicate such to the respective crew.

However, it is the responsibility of the ramp supervisor to verify on every flight and report major visible discrepancies to the operator/crew.

Ballast: Not carried as standard.

17.1.3 Minimum Fuel and Standard Taxi Fuel

Minimum Fuel:	Not Applicable
Standard Taxi Fuel:	200 kg

17.2 LMC Restrictions

Computer Loadsheet Maximum LMC:	+/- 200 kg
Manual Loadsheet Maximum LMC:	+/- 500 kg

17.3 Minimum Flight Weight

N/A

UNCONTROLLED DOCUMENT
UNCONTROLLED DOCUMENT

UNCONTROLLED DOCUMENT (27 NOVEMBER 2024 14:15:37)

UNCONTROLLED DOCUMENT

18. Maxiumum Package Dimensions

18.1 Main Cargo Door

MAIN CARGO COMPARTMENT MAXIMUM ALLOWABLE PACKAGE SIZES - SIDE CARGO DOOR												
HEIGHT IN.	WIDTH IN.											
	10	20	30	40	50	60	70	80	88	100	108	125
	LENGTH IN.											
82	320	260	220	180	150	130	*	*	*	*	*	*
80	350	290	240	190	180	160	*	*	*	*	*	*
70	540	400	320	260	220	200	170	130	*	*	*	*
60	650	520	400	320	260	230	200	170	160	140	130	*
50	650	650	480	370	300	260	230	200	180	160	130	125
40	650	650	480	370	300	260	230	200	180	160	130	125
30	650	650	500	380	320	260	230	200	190	165	130	125
20	650	650	500	380	320	260	230	200	190	165	130	125
10	650	650	500	380	320	270	235	210	190	165	130	125
5	650	650	500	380	320	270	235	210	190	165	130	125

Height including ULD

18.2 Forward Lower-deck Hold.

HOLD 1.3 - Lift assisted										
HEIGTH (CM)	WIDTH (CM)									
	12	25	38	50	63	76	88	101	114	121
	LENGTH (CM)									
86	314	289	264	238	213	187	162	137	127	114
81	314	289	264	238	213	187	162	137	127	114
76	314	289	264	238	213	187	162	137	127	114
71	314	289	264	238	213	187	162	137	127	114
66	314	289	264	238	213	187	162	137	127	114
60	314	289	264	238	213	187	162	137	127	114
55	314	289	264	238	213	187	162	137	127	114
50	317	289	264	238	213	187	162	137	127	114
45	317	289	264	238	213	187	162	137	127	114
40	320	289	264	238	213	187	162	137	127	114
35	322	289	264	238	213	187	162	137	127	114
30	327	292	264	238	213	187	162	137	127	114
25	332	294	264	238	213	187	162	137	127	114
12	396	304	266	238	213	187	162	137	127	114

UNCONTROLLED DOCUMENT (27 NOVEMBER 2024 14:15:37)

HOLD 1.3 - Light packages hand maneuvred										
HEIGTH (CM)	WIDTH (CM)									
	12	25	38	50	63	76	88	101	114	121
	LENGTH (CM)									
86	284	254	228	205	185	170	154	144	137	134
81	332	294	264	238	215	195	180	167	160	157
76	381	332	297	266	241	220	203	187	180	175
71	426	373	314	294	266	241	223	208	195	193
66	477	408	360	320	287	261	238	223	210	205
60	533	449	391	347	309	281	256	238	226	220
55	586	492	424	373	332	299	274	254	238	231
50	645	533	457	398	353	317	289	266	248	243
45	693	579	490	424	373	335	302	279	259	254
40	695	627	523	449	401	353	317	289	269	261
35	698	678	558	477	429	368	330	302	279	271
30	703	693	591	500	434	383	342	312	287	279
25	703	695	635	533	459	403	360	327	299	284
12	711	701	693	614	520	452	401	360	330	294

18.3 Aft Lower-deck Hold.

HOLD 4.1 - Lift assisted										
HEIGTH (CM)	WIDTH (CM)									
	12	25	38	50	63	76	88	101	114	121
	LENGTH (CM)									
86	177	152	0	0	0	0	0	0	0	0
81	251	226	200	177	152	124	0	0	0	0
76	309	284	259	233	208	182	157	132	109	109
71	309	284	259	233	208	182	157	132	109	109
66	309	284	259	233	208	182	157	132	109	109
60	309	284	259	233	208	182	157	132	109	109
55	309	284	259	233	208	182	157	132	109	109
50	312	284	259	233	208	182	157	132	109	109
45	314	284	259	233	208	182	157	132	109	109
40	317	284	259	233	208	182	157	132	109	109
35	322	284	259	233	208	182	157	132	109	109
30	327	287	259	233	208	182	157	132	109	109
25	350	297	261	233	208	182	157	132	109	109
12	416	330	274	233	208	182	157	132	109	109

UNCONTROLLED DOCUMENT
UNCONTROLLED DOCUMENT

UNCONTROLLED DOCUMENT (27 NOVEMBER 2024 14:15:37)

UNCONTROLLED DOCUMENT

HOLD 4.1 - Light packages hand maneuvred										
HEIGTH (CM)	WIDTH (CM)									
	12	25	38	50	63	76	88	101	114	121
	LENGTH (CM)									
86	226	195	167	147	132					
81	314	274	236	208	182	162	144	132	124	124
76	406	355	312	279	251	226	205	190	177	170
71	447	386	337	299	266	238	215	198	185	177
66	510	434	375	330	294	264	238	218	203	193
60	579	480	411	360	320	287	259	236	220	208
55	627	523	449	386	340	304	274	251	233	223
50	698	571	485	421	373	325	294	266	246	233
45	858	614	523	447	393	342	309	281	259	246
40	861	673	558	477	416	363	325	294	269	254
35	863	744	604	510	441	388	340	307	281	264
30	866	858	642	538	462	406	363	330	302	271
25	871	861	693	574	482	421	375	337	309	279
12	876	863	855	680	561	477	414	365	332	304

UNCONTROLLED DOCUMENT

UNCONTROLLED DOCUMENT

The remainder of this page is intentionally left blank.

UNCONTROLLED DOCUMENT (27 NOVEMBER 2024 14:15:37)