UNCONTROLLED DOCUMENT



TAY B752PCF/PF

ASL Airlines Belgium B757-200PCF/PF

Revision: 3
Date: 27 November 2024

1 ASL Airlines Belgium B757-200PCF Registrations
2 Aircraft Dimensions
3 Aircraft Servicing Points and Specifications
4 Ground Support Equipment
5 Standard Turnaround Times
6 Safety Areas
7 Strong Wind Conditions
8 Aircraft Door Dimensions
9 Compartment Classification and Air-Conditioning
10 Aircraft Cabin Contour Dimensions
11 Maximum Position Weights
12 Aircraft ULD Compatibility
13 Loading and Un-Loading
14 Rigid, Oversized and Special Loads
15 Restricted Commodities Loading
16 Messaging and Reporting
17 Load Control Data
18 Maximum Package Dimensions

UNCONTROLLED DOCUMENT

UNCONTROLLED DOCUMENT

Page	Date	Comment
15	27 November 2024	ULD types no longer available in the DHL network, removed. *(Minor)*
18	27 November 2024	Guidance on the handling of special loads information added and Global airside replaced with Special Loads Regional contact. *(Minor)*
19	27 November 2024	Global airside replaced with Special Loads Regional contact. *(Minor)*

UNCONTROLLED DOCUMENT

UNCONTROLLED DOCUMENT

UNCONTROLLED DOCUMENT

1. ASL Airlines Belgium B757-200PCF Registrations

IATA Designator:	**3V**
ICAO Designator:	**TAY**
Valid for:	**OOTFC (B757PCF), OELFB (B757PF)**

UNCONTROLLED DOCUMENT

UNCONTROLLED DOCUMENT

UNCONTROLLED DOCUMENT (27 NOVEMBER 2024 14:33:02)

2. Aircraft Dimensions

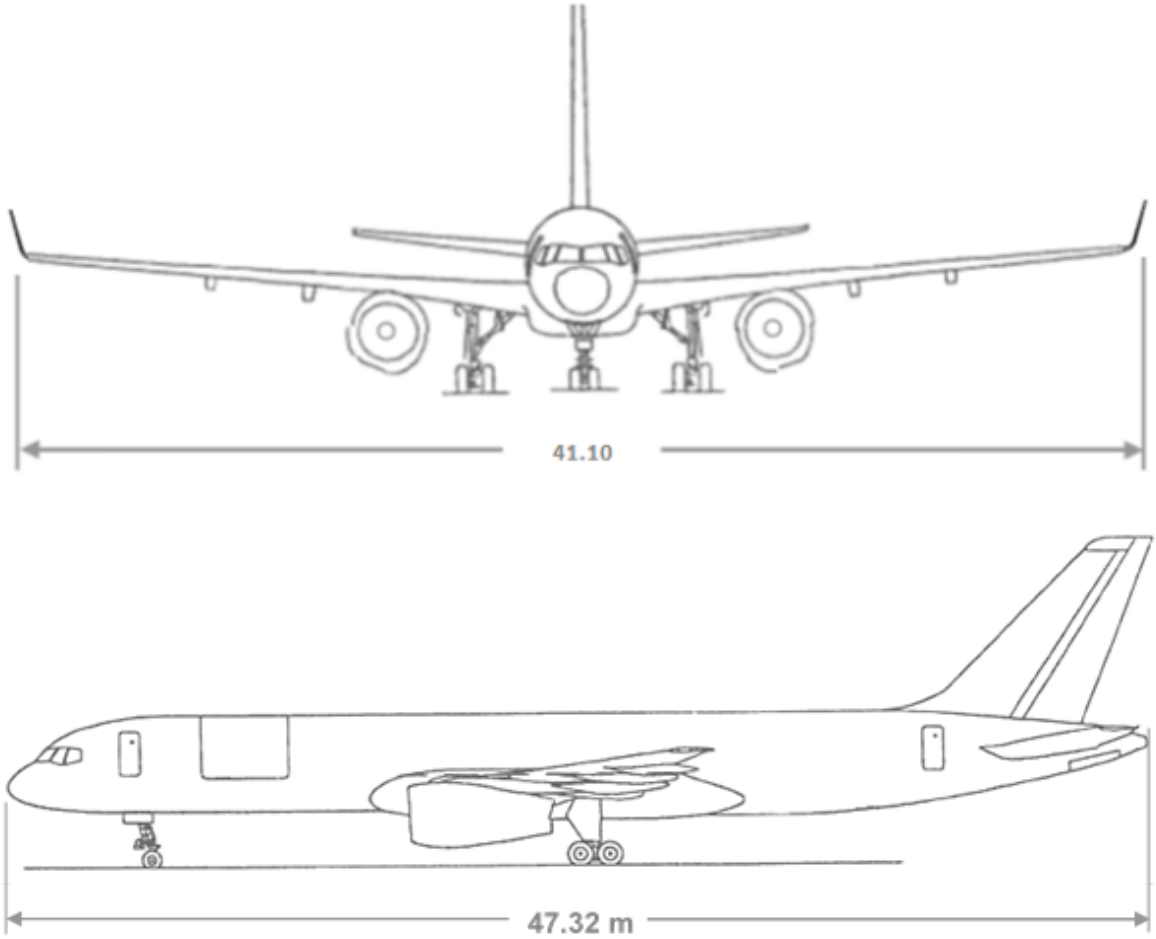

UNCONTROLLED DOCUMENT
UNCONTROLLED DOCUMENT

UNCONTROLLED DOCUMENT (27 NOVEMBER 2024 14:33:02)

UNCONTROLLED DOCUMENT

3. Aircraft Servicing Points and Specifications

3.1 Servicing Points

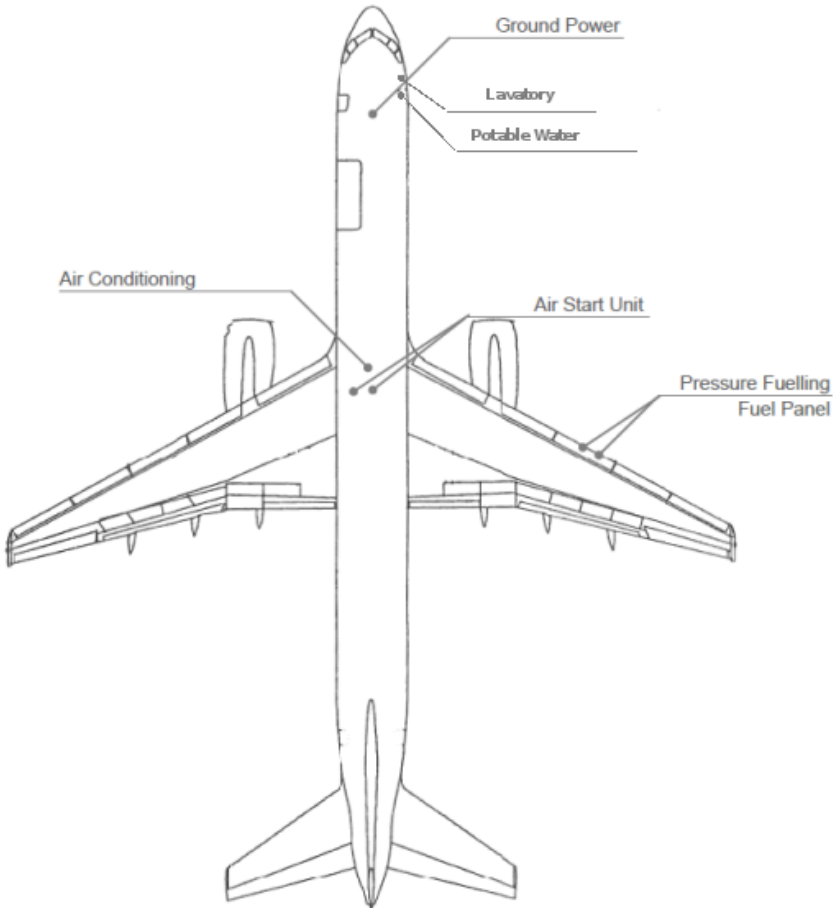

3.2 Servicing Specifications

System	Requirements	Notes
Ground Power	115/200V AC / 90 kVA / 400 Hz	1 GPU Connection available
Fuel	Jet A1	Fuel control panel on **RH wing only**
Air Condition Unit	Maximum Flow Rate 150 ppm	1 ACU inlet available
Air Start Unit (Pneumatic)	Minimum capacity 226 ppm Max. / Min. pressure 60 / 40 psi	2 ASU inlets available. 2 ASUs may be required, depending on flow rate and ambient air temperature

UNCONTROLLED DOCUMENT (27 NOVEMBER 2024 14:33:02)

4. Ground Support Equipment

4.1 Positioning of GSE

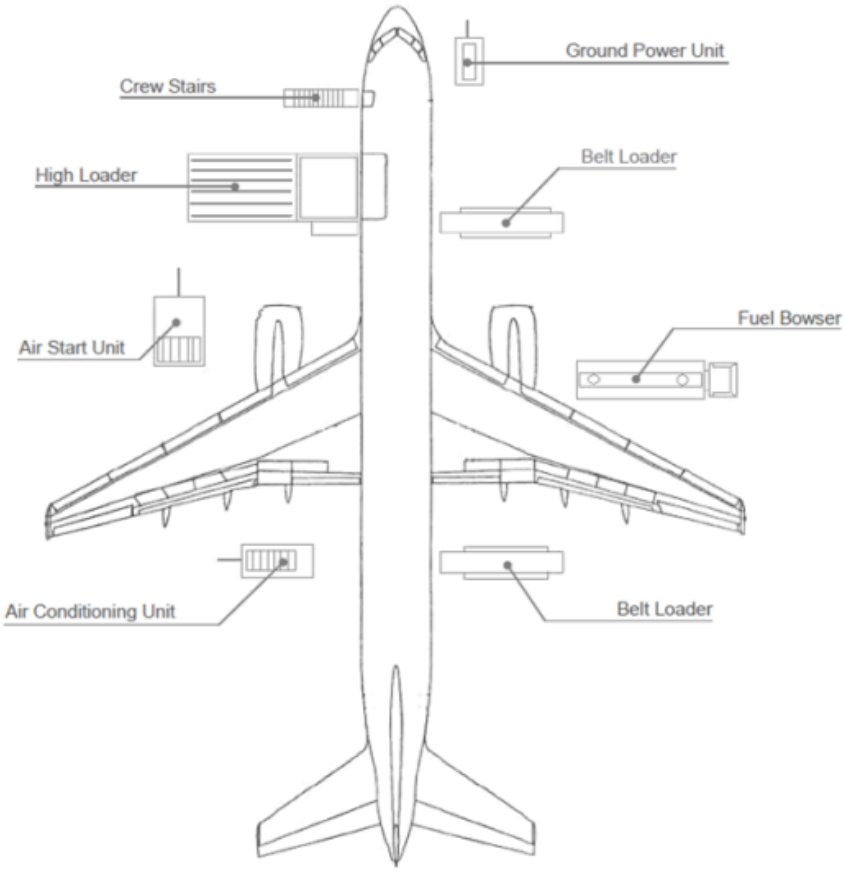

4.2 GSE Requirements

GSE	Type	Quantity
High Loader	Main –deck	1
Ground Power Unit	Diesel. Electric or Fixed	1
Crew Stairs	Platform height 378cm – 401cm	1
Belt Loader	Standard (30 ft. recommended	2
Tractor	Diesel or Electric	3
Dolly wagons	125”/88” capable	Up to 15
Belly Container / Wagon	As required	According to load

UNCONTROLLED DOCUMENT
UNCONTROLLED DOCUMENT

UNCONTROLLED DOCUMENT (27 NOVEMBER 2024 14:33:02)

UNCONTROLLED DOCUMENT

5. Standard Turnaround Times

Turn-around time for a transit stop: 00:45 hour (partial off- and on-load)
Turn-around time for an end stop: 01:00 hour (full off- and on-load)

Note: For airports where the aircraft will power-off stand using engine power, add 3 minutes to the turn-around times listed above.

UNCONTROLLED DOCUMENT

UNCONTROLLED DOCUMENT

UNCONTROLLED DOCUMENT (27 NOVEMBER 2024 14:33:02)

UNCONTROLLED DOCUMENT

6. Safety Areas

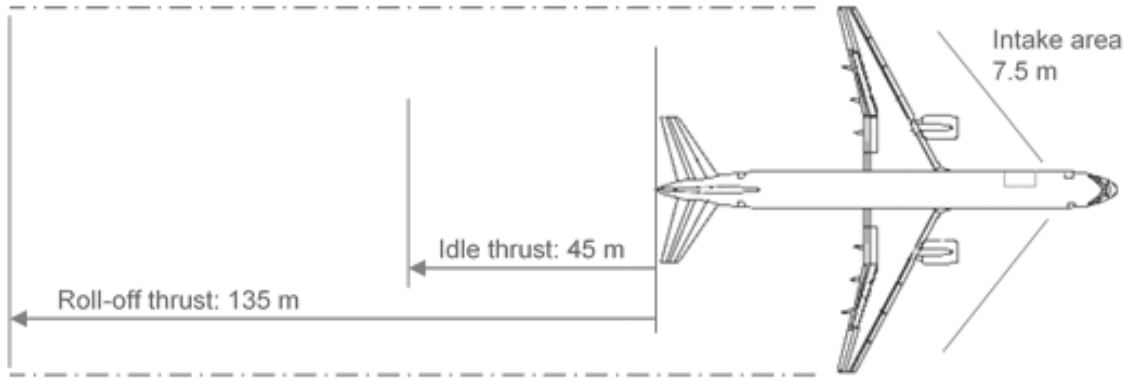

UNCONTROLLED DOCUMENT

UNCONTROLLED DOCUMENT

UNCONTROLLED DOCUMENT (27 NOVEMBER 2024 14:33:02)

UNCONTROLLED DOCUMENT

7. Strong Wind Conditions

If the wind conditions on the ramp reach the following speeds, the corresponding actions shall be taken.

Wind Speed	Action
Up to 25 Knots	Main cargo door shall only be operated in full-open position at a max. of 25 knots.
More than 25 Knots	Main cargo door must be operated in *Canopy position.
Up to 45 knots	Normal Operations: All doors can be opened and left open
More than 45 knots	Do not open additional doors
More than 45 knots	All open doors shall be closed immediately

Notes: * Since there is no indication for Canopy position it is defined as follows:

Door position where an imaginary horizontal line between the door hinge lower edge is formed parallel to the ground +/-20 degrees.

UNCONTROLLED DOCUMENT

UNCONTROLLED DOCUMENT

UNCONTROLLED DOCUMENT (27 NOVEMBER 2024 14:33:02)

8. Aircraft Door Dimensions

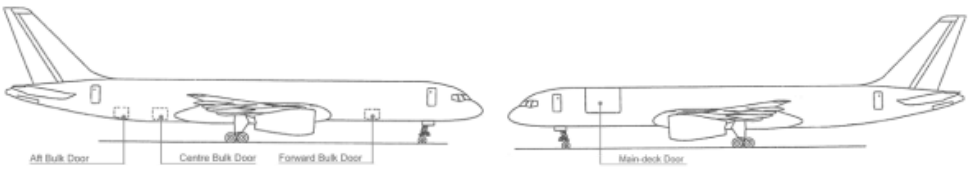

Door width, height, and sill height are defined as follows.

(This drawing is for illustration purposes only and may not be an exact representation of this aircraft type)

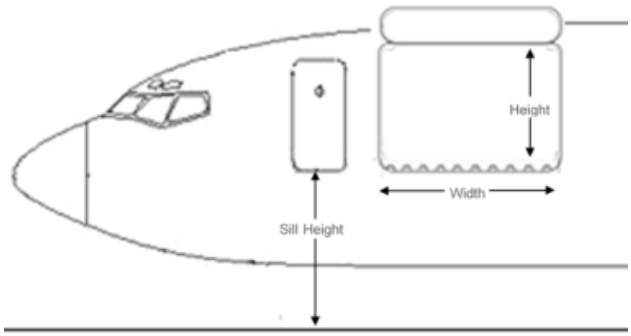

All dimensions are in centimetres (cm).

Door	Door Width	Door Height	Min. Door Sill Height	Max. Door Sill Height
Crew Door	-	-	402	412
Main Deck	345	216	378	404
Forward Bulk	140	107	246	267
Aft Bulk	140	114	231	251

UNCONTROLLED DOCUMENT
UNCONTROLLED DOCUMENT

UNCONTROLLED DOCUMENT (27 NOVEMBER 2024 14:33:02)

UNCONTROLLED DOCUMENT

9. Compartment Classification and Air-Conditioning

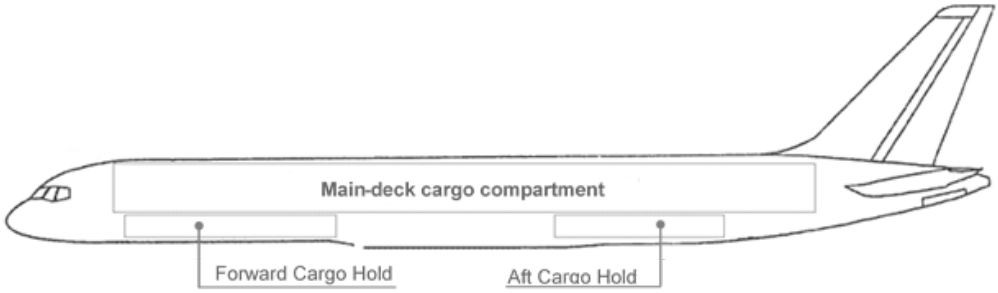

9.1 Compartment Classification

Compartment		Features
Main-deck	Position 1 loaded with 125"/88" ULD **with** 50 cm (18") aisle.	- Classification **E**
		- Pressurisation
		- Smoke Detection
		- **Accessible** during flight
	Position 1 loaded with 125"/88" ULD **without** 50 cm (18") access aisle.	- Classification **E**
		- Pressurisation
		- Smoke Detection
		- **In-accessible** during flight
Lower Deck Compartment All Holds		- Classification **E**
		- Pressurisation
		- Smoke Detection
		- **In-accessible** during flight
		-Fire Suppression

9.2 Air-Conditioning

	Main Deck	FWD Lower Hold*	AFT Lower Hold*
Temperature	18°C to 29°C	No Direct Control 10°C to 21°C	No Direct Control 10°C to 21°c
Heating	Yes	Yes	
Heat Adjust	Yes	No	
Cooling	Yes	No	
Ventilation	Yes	From Main Deck Leakage Only	

UNCONTROLLED DOCUMENT (27 NOVEMBER 2024 14:33:02)

UNCONTROLLED DOCUMENT

10. Aircraft Cabin Contour Dimensions

The aircraft is divided into three contour zones: CI, CII and CII. Note that all heights given in the below Contour diagrams are **from the top of rollers**.

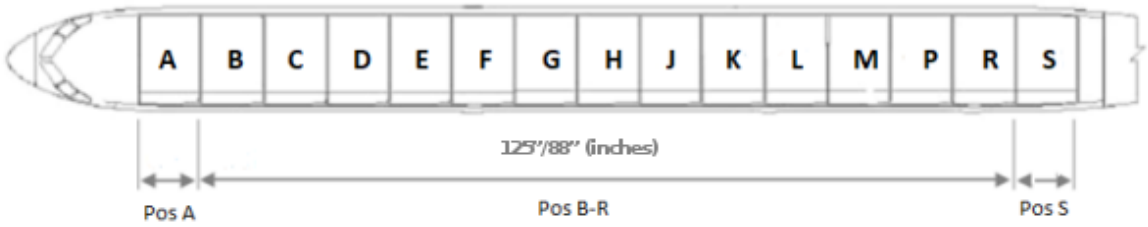

10.1 Contour CI (Pos A 88”

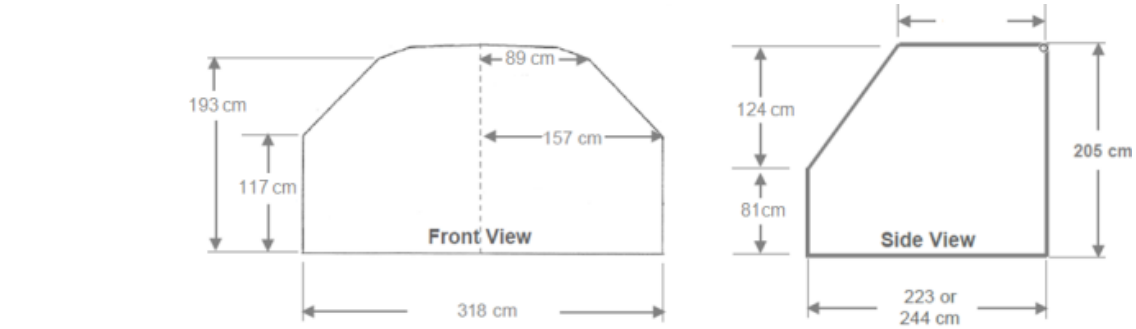

Side View

Note: The sloped contour on the side view must face **forward**.

10.2 Contour CII (Pos B - R 88”)

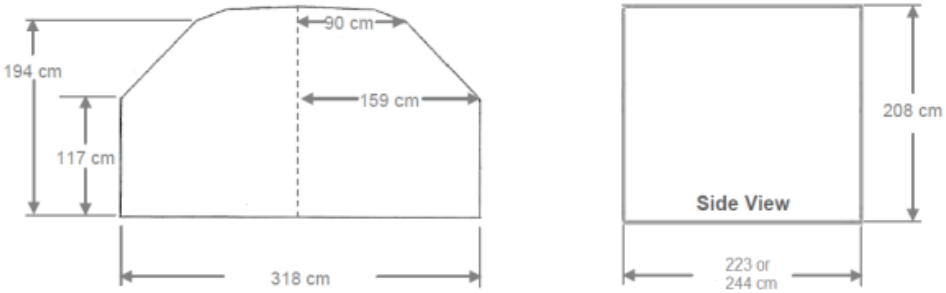

UNCONTROLLED DOCUMENT (27 NOVEMBER 2024 14:33:02)

UNCONTROLLED DOCUMENT

10.3 Contour CIII

(Pos S 88")

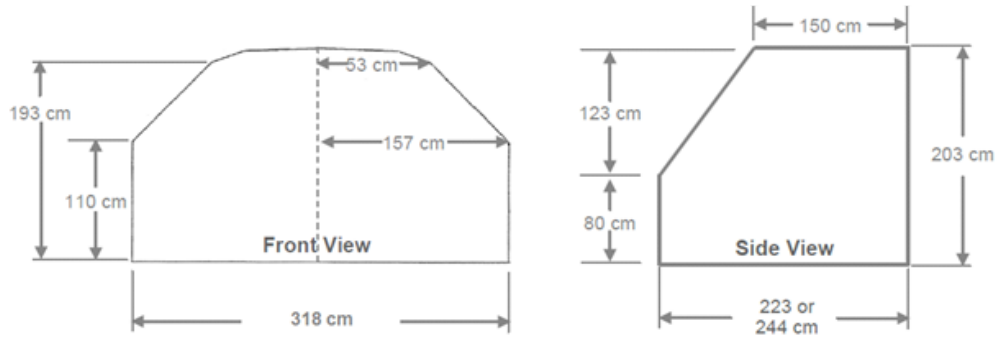

Note: The sloped contour on the side view must face **aftward.**

UNCONTROLLED DOCUMENT

UNCONTROLLED DOCUMENT

UNCONTROLLED DOCUMENT (27 NOVEMBER 2024 14:33:02)

UNCONTROLLED DOCUMENT

11. Maximum Position Weights

11.1 Maximum Main-deck ULD Weights in Kilograms

	ULD Position														
ULD Size 125"/88"	A	B	C	D	E	F	G	H	J	K	L	M	P	R	S
B757PCF	2716	2948						4264		2948					2442
B757PF	3084							3628		2494					2116

11.2 Maximum Lower-deck Compartment Weights in Kilograms

	Forward hold			Aft hold	
Compartment	1.1A	1.1B	1.2	4.1	4.2
Max. Weight	804	804	3063	2974	4419
	4490			7238	
Volume (m3)	2	3.15	14.58	14.25	17.75

UNCONTROLLED DOCUMENT

UNCONTROLLED DOCUMENT

UNCONTROLLED DOCUMENT (27 NOVEMBER 2024 14:33:02)

12. Aircraft ULD Compatibility

12.1 Aircraft Configurations

The loading combinations shown here are examples only. More combinations are possible. Full information covering possible loading combinations, and how they interact, can be found in the Sable system.

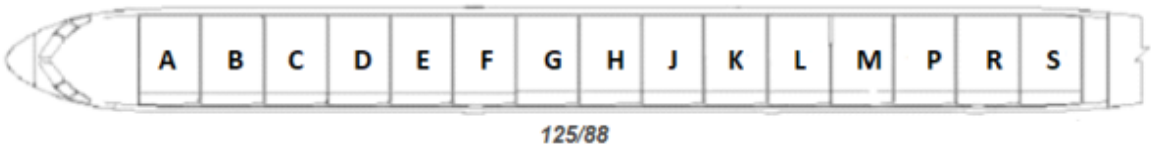

Configuration 1: 15 Lateral 125”/88”

The remainder of this page is intentionally blank.

UNCONTROLLED DOCUMENT
UNCONTROLLED DOCUMENT

12.2 ULD Compatibility Table

The following ULD type loading restrictions apply. The ULD type can be loaded on positions marked with a 'Y'. The ULD type cannot be loaded on positions marked with a 'N'.

		ULD Type			
	Pos	AAA	AAC/ LAY	AAJ/ LAK	PAG/ PAJ
Configuration 1	A	Y	Y1	Y	Y
	B	Y	Y	Y	Y
	C	Y	Y	Y	Y
	D	Y	Y	Y	Y
	E	Y	Y	Y	Y
	F	Y	Y	Y	Y
	G	Y	Y	Y	Y
	H	Y	Y	Y	Y
	J	Y	Y	Y	Y
	K	Y	Y	Y	Y
	L	Y	Y	Y	Y
	M	Y	Y	Y	Y
	P	Y	Y	Y	Y
	R	Y	Y	Y	Y
	S	Y	Y2	Y	Y

Y1: AAC series 9021 and above allowed.

Y2: AAC9346-9410, AAC9731-9995 allowed.

Notes:

- Load position A - R with the Sloped contour side facing forward and Position S with the sloped contour side facing Aft.
- No Pallet stacks allowed on the first and/or last positions main deck.
- Care must be exercised loading AAA and AAC/LAY ULDs, to prevent out-of-gauge ULDs impacting the roof or sidewall lining.

UNCONTROLLED DOCUMENT
UNCONTROLLED DOCUMENT

UNCONTROLLED DOCUMENT (27 NOVEMBER 2024 14:33:02)

13. Loading and Un-Loading

13.1 Un-Loading Sequence

Step 1: Un-load the aft lower deck.

Step 2: Un-load the ULDs on the main deck in the following numbered sequence, and **respect standard step un-loading method:**



Step 3: Un-load the forward lower deck.

13.2 Loading Sequence

Step 1: Load the forward lower deck.

Step 2: Load the ULDs on the main deck in the following numbered sequence, and **respect standard step un-loading method:**

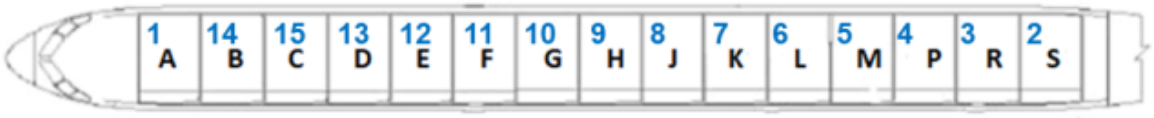

Step 3: Load the aft lower deck.

13.3 Loading Notes

13.3.1 Counter-ballast

To provide counterbalance during loading and offloading, a minimum of 1.000 kg is required in Position A for load in excess of 10.000 kg. Below that figure, a minimum of 10% of the load must be in Position A to provide counterbalance.

If carrying light CAO ULDs, it is allowed to combine Position A and Compartment 1.1A, 1.1B & 1.2 to comply with minimum counterbalance requirement.

13.3.2 Simultaneous Loading and Un-loading of Lower-deck Holds

Due to the inherent stability of this aircraft, simultaneous loading and/or un-loading of all lower-deck holds, using up to 2 belt-loaders, is allowed. If this procedure is being used, it must be ensured that Position A, or Position A and Hold 1.1A, 1.1B & 1.2, is/are always loaded with a minimum of (or no less than) 1000kg.

UNCONTROLLED DOCUMENT
UNCONTROLLED DOCUMENT

UNCONTROLLED DOCUMENT (27 NOVEMBER 2024 14:33:03)

UNCONTROLLED DOCUMENT

13.3.3 Sliding Carpet

After un-loading, the Sliding Carpet should be fully retracted unless the hold will be loaded for an outbound flight. Prior to departure, the Sliding Carpet must be fully retracted. This procedure is to ensure the hold will be serviceable even if the Sliding Carpet should malfunction.

Note: It is prohibited for ground staff to detach the bulkhead assembly.

13.3.4 Lower Lobe Cargo Door Switch Malfunction

The door is supposed to stop in any position when the switch is released. However, it has been known to fail, and continue to close after the control switch is released.

The switch is located in the external control panel aft of each cargo door

Ramp personnel must be aware of this potential situation. They shall:

- Position themselves clear of the door path when operating the door
- Ensure that the door stops moving after releasing the control switch, before moving into the door path area.

UNCONTROLLED DOCUMENT

UNCONTROLLED DOCUMENT

UNCONTROLLED DOCUMENT (27 NOVEMBER 2024 14:33:03)

UNCONTROLLED DOCUMENT

14. Rigid, Oversized and Special Loads

For guidance on the handling of special loads, please refer to the Special Loads Regional Contact Instructions outlined in Chapter 6 **6.12.22.3 - Determining Loadability of Special Loads**. Where direct operator approval is required, the Regional Airside Team will liaise with Global Airside as needed.

14.1 Floating / Heavy Pallets

ULDs which are heavier than the standard allowed maximum gross weight may be loaded on the main deck as centre load.

Permission must be sought from your Special Loads Regional contact before accepting any ULDs which require loading on a floating position.

14.2 Crushable Cargo Requirements

If Rigid cargo is loaded on the aircraft, the first loaded position on the aircraft must be occupied with a Crushable Cargo loaded ULD suitable for protecting the barrier wall against unrestrained Rigid Cargo.

14.3 Piercing Cargo

Piercing cargo may not be loaded on the first and last loaded position on the aircraft.

14.4 Aircraft Engines

Engines must be loadable on 88” pallets. If there is a requirement to transport engines, contact your Special Loads Regional contact for more information.

UNCONTROLLED DOCUMENT

UNCONTROLLED DOCUMENT

UNCONTROLLED DOCUMENT (27 NOVEMBER 2024 14:33:03)

UNCONTROLLED DOCUMENT

14.5 Live Animals

14.5.1 Horses

Carriage of Horses is not permitted on this aircraft.

14.5.2 Other Live Animals

The following table provides a list of commonly transported animals. If there is a requirement to transport animals not listed below, contact your Special Loads Regional contact.

	Main-Deck	Forward hold	Aft hold
Day-old chickens	Yes (max 2 pallets)	Yes	No
Monkeys	Yes		
Pigs			
Cattle			
Sheep or Goats			
Dogs or Cats			
Small mammals or birds			
Topical Fish			
Reptiles or Amphibians			
Eels			Yes
Crustaceans or Molluscs			Yes
Bees			No
Hatching eggs			Yes

UNCONTROLLED DOCUMENT

UNCONTROLLED DOCUMENT (27 NOVEMBER 2024 14:33:03)

UNCONTROLLED DOCUMENT

15. Restricted Commodities Loading

15.1 Radioactive (RRY), Magnetised (MAG) and Cargo Aircraft Only (CAO)

The following Dangerous Good type loading restrictions apply. The Dangerous Good type can be loaded on positions marked with a 'Y'. The Dangerous Good type cannot be loaded on positions marked with a 'N'.

	Position																
DG Type	A	B	C	D	E	F	G	H	J	K	L	M	P	R	S	FWD LD	AFT LD
MAG	N	N	Y	Y	Y	Y	Y	Y	Y	Y	Y	Y	Y	Y	Y	N	Y
CAO	Y	Y	Y	Y	Y	Y	Y	Y	Y	Y	Y	Y	Y	Y	Y	N	N
RRY (max. 50 TI combined)	N	N	N	N	N	N	Y	Y	Y	Y	Y	Y	Y	Y	Y	N	Y
RRY (max. 200 TI combined)	N	N	N	N	N	N	N	N	N	N	N	N	N	N	N	N	N

Notes:

RRY Max loading limit in the main deck is 50 TI with a Max ULD loading limit of 25 TI each.

Cargo Aircraft Only (CAO) can be loaded on any Main Deck position A to S provided they are loaded accessible. Accessible means that:

- The CAO is loaded on a pallet
- All positions forward of the CAO are loaded with 125"/88" pallets with aisle

Load incompatibilities between AVI, HEG, LHO, and FIL in the lower holds and RRY in the main deck:

If this special Load….	…..is loaded into lower-deck compartment	….then Max 50 TI together are allowed on Main–deck positions…
AVI,HEG,LHO	**Forward Hold**	G-S
FIL		H-S
AVI, HEG, LHO	**Aft Hold**	G and S
FIL		G-J

15.2 Dry Ice

Please see the Global Supplementary Operational Document **Dry Ice Consolidation table** for the current maximum allowed Dry Ice limits.

Dry Ice (ICE) and Live Animals (AVI)

There is no weight limit for the loading of Dry Ice (ICE) together with Live Animals (AVI) on the Main-deck.

15.3 Lithium Batteries

Please see the Global Supplementary Operational Document **Lithium Battery Loadability Consolidation Table** for the current UN3480 Section IA/IB (RBI), UN3090 Section IA/IB (RBM), UN3481 Section I (RLI), UN3091 Section I (RLM) load ability limits.

UNCONTROLLED DOCUMENT (27 NOVEMBER 2024 14:33:03)

UNCONTROLLED DOCUMENT

16. Messaging and Reporting

16.1 Messaging

Standard messaging rules apply.

16.2 Reporting

Standard reporting rules apply.

UNCONTROLLED DOCUMENT

UNCONTROLLED DOCUMENT

UNCONTROLLED DOCUMENT (27 NOVEMBER 2024 14:33:03)

17. Load Control Data

17.1 Standard Mass Additions

17.1.1 Additional Crew Members (ACM)

Maximum Number of ACMs:	4
Mass of ACM:	100 kg

17.1.2 Fly Away Kit (FAK) and Ballast

50 kg of FAK loaded in compartment 1.2 on registration OO-TFC. The FAK weight is not included in the DOW/DOI.

Ballast is not carried as standard on this aircraft.

17.2 Minimum Fuel and Standard Taxi Fuel

Minimum Fuel:	2000 kg
Standard Taxi Fuel:	400 kg

17.3 LMC Restrictions

Payload:	+/- 500 kg
Fuel:	+/- 1000 kg

Fuel and Payload LMC figures shall not be added together.

UNCONTROLLED DOCUMENT
UNCONTROLLED DOCUMENT

UNCONTROLLED DOCUMENT (27 NOVEMBER 2024 14:33:03)

UNCONTROLLED DOCUMENT

17.4 Minimum Flight Weight (MFW)

The Minimum Flight Weight is the minimum weight which the aircraft must maintain for the entire duration of a flight.

For empty or lightly loaded flights, physical ballast is required to reach the MFW.

The payload / ballast required to be loaded on an aircraft in order to maintain MFW can be calculated as the difference between the MFW and the Dry Operating Weight (DOW). The MFW and DOW can be found in **Aircraft Index and Classification**.

UNCONTROLLED DOCUMENT

UNCONTROLLED DOCUMENT

UNCONTROLLED DOCUMENT (27 NOVEMBER 2024 14:33:03)

18. Maximum Package Dimensions

18.1 Main Deck Cargo Door

Not currently available.

18.2 Forward Hold

HEAVY PACKAGES LIFT ASSISTED											
HEIGHT IN.	WIDTH IN.										
	5	10	15	20	25	30	35	40	45	50	55
	LENGTH IN.										
40	139	129	119	109	99	89	79	69	61	55	50
35	139	129	119	109	99	89	79	69	61	55	50
30	140	129	119	109	99	89	79	69	61	55	50
25	141	129	119	109	99	89	79	69	61	55	50
20	144	130	119	109	99	89	79	69	61	55	50
15	148	132	119	109	99	89	79	69	61	55	50
10	157	136	120	109	99	89	79	69	61	55	50
5	177	146	125	110	99	89	79	69	61	55	50

LIGHT PACKAGES HAND MANEUVERED											
HEIGHT IN.	WIDTH IN.										
	5	10	15	20	25	30	35	40	45	50	55
	LENGTH IN.										
40	151	139	129	119	109	99	89	79	70	63	57
35	192	172	156	144	134	123	113	103	92	83	76
30	239	207	184	166	152	140	130	119	109	98	89
25	290	243	210	186	168	153	141	131	120	108	98
20	290	243	210	186	168	153	141	131	120	108	98
15	290	243	210	186	168	153	141	131	120	108	98
10	290	243	210	186	168	153	141	131	120	108	98
5	290	243	210	186	168	153	141	131	120	108	98

UNCONTROLLED DOCUMENT
UNCONTROLLED DOCUMENT

UNCONTROLLED DOCUMENT (27 NOVEMBER 2024 14:33:03)

UNCONTROLLED DOCUMENT

18.3 Aft Hold

HEAVY PACKAGES LIFT ASSISTED											
HEIGHT IN.	WIDTH IN.										
	5	10	15	20	25	30	35	40	45	50	55
	LENGTH IN.										
42	135	132	122	112	102	92	82	72	64	57	51
40	135	132	122	112	102	92	82	72	64	58	51
35	135	132	122	112	102	92	82	72	64	58	51
30	135	132	122	112	102	92	82	72	64	58	51
25	135	133	122	112	102	92	82	72	64	58	51
20	135	133	122	112	102	92	82	72	64	58	51
15	135	133	123	112	102	92	82	72	64	58	51
10	135	133	126	112	102	92	82	72	64	58	51
5	135	133	132	115	102	92	82	72	64	58	51

LIGHT PACKAGES HAND MANEUVERED											
HEIGHT IN.	WIDTH IN.										
	5	10	15	20	25	30	35	40	45	50	55
	LENGTH IN.										
42	136	134	133	124	114	104	94	84	75	67	60
40	137	136	134	132	124	113	103	93	83	75	67
35	140	138	136	134	132	129	121	111	100	90	82
30	142	140	138	136	133	131	129	124	113	102	93
25	144	142	140	137	135	132	130	127	122	110	100
20	144	142	140	137	135	132	130	127	122	110	100
15	144	142	140	137	135	132	130	127	122	110	100
10	144	142	140	137	135	132	130	127	122	110	100
5	144	142	140	137	135	132	130	127	122	110	100

Note: To convert from inches to centimetres, multiply by 2.54

UNCONTROLLED DOCUMENT

UNCONTROLLED DOCUMENT (27 NOVEMBER 2024 14:33:03)