UNCONTROLLED DOCUMENT



UCR AN12
Aero Charter AN12

Revision: 1
Date: 25 September 2024

1 Aerocharter AN-12B Registrations

2 Aircraft Dimensions

3 Aircraft Servicing Points and Specifications

4 Ground Support Equipment

5 Standard Turnaround Times

6 Safety Areas

7 Strong Wind Conditions

8 Aircraft Door Dimensions

9 Compartment Classification and Air-Conditioning

10 Aircraft Cabin Contour Dimensions

11 Maximum Position Weights

12 Aircraft ULD Compatibility

13 Loading and Un-Loading

14 Rigid, Oversized and Special Loads

15 Restricted Commodities Loading

16 Messaging and Reporting

17 Load Control Data

18 Maximum Package Dimensions

UNCONTROLLED DOCUMENT

UNCONTROLLED DOCUMENT

UNCONTROLLED DOCUMENT (25 SEPTEMBER 2024 15:44:28)

Page	Date	Comment
13	25 September 2024	ULD types no longer available in the network removed. *(Minor)*
15	25 September 2024	Guidance on the handling of special loads information added. *(Minor)*

UNCONTROLLED DOCUMENT
UNCONTROLLED DOCUMENT

1. Aerocharter AN-12B Registrations

IATA Designator: -
ICAO Designator: **ZZZ**
Valid for: **-**

UNCONTROLLED DOCUMENT
UNCONTROLLED DOCUMENT

UNCONTROLLED DOCUMENT

2. Aircraft Dimensions

All dimensions in meters.

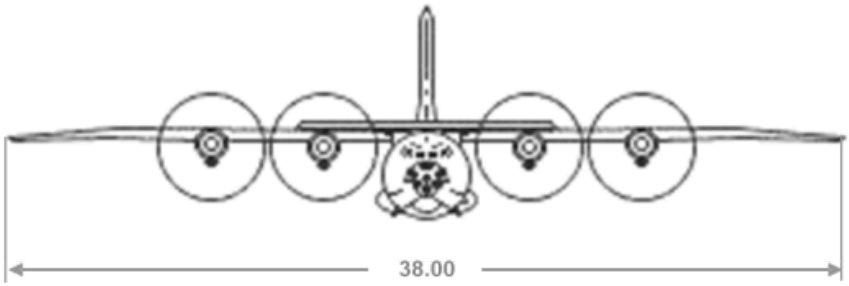

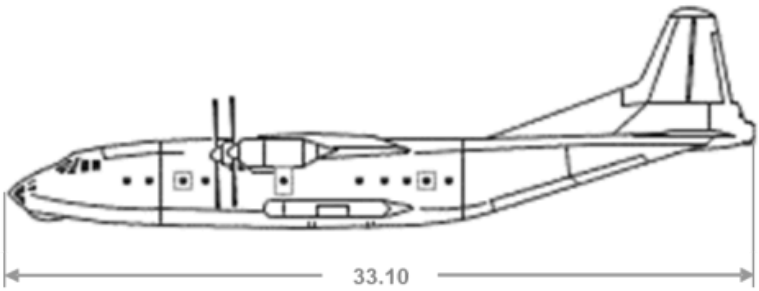

UNCONTROLLED DOCUMENT

UNCONTROLLED DOCUMENT

UNCONTROLLED DOCUMENT (25 SEPTEMBER 2024 15:44:28)

UNCONTROLLED DOCUMENT

3.1 Servicing Points

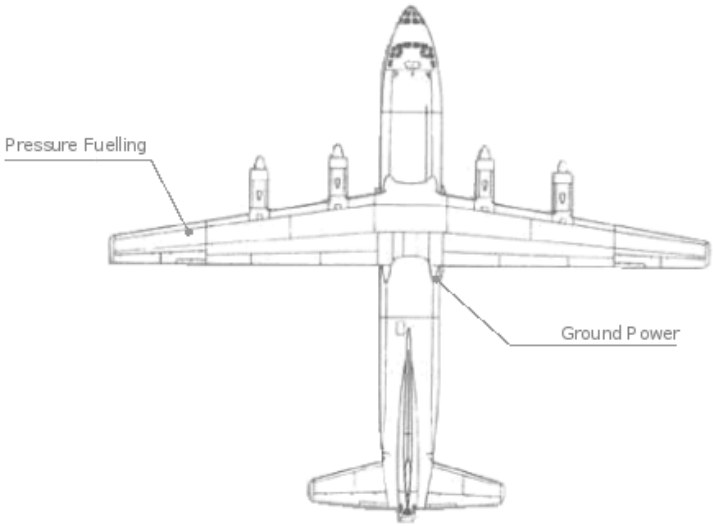

3.2 Servicing Specifications

System	Requirements	Notes
Ground Power Unit	115V AC	
Fuel	Jet A1	

UNCONTROLLED DOCUMENT

UNCONTROLLED DOCUMENT

UNCONTROLLED DOCUMENT (25 SEPTEMBER 2024 15:44:28)

4. Ground Support Equipment

4.1 Positioning of GSE

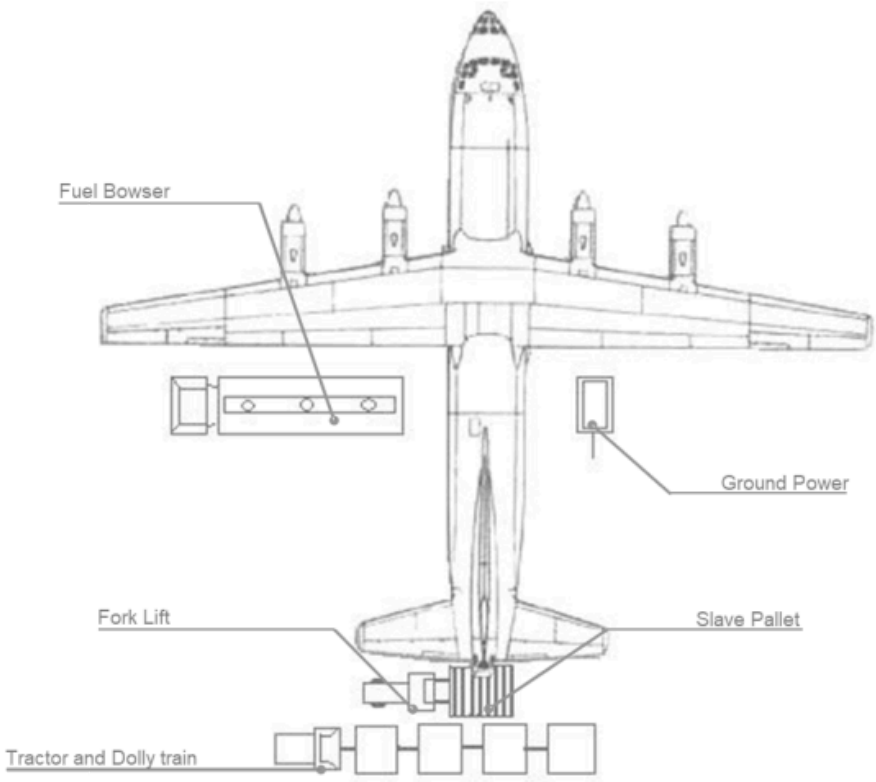

It is imperative that a forklift with sufficient lifting capacity is utilised to minimise the risk of tipping. A forklift with a minimum lifting capacity of 7.5 tons shall be used.

Care must be exercised to ensure ULDs are not lifted too high, risking an impact with the aircraft tail cone.

4.2 GSE Requirements

GSE	Type	Quantity
Fork Lift	7.5 tons minimum lifting capacity	1
Crew stairs	Self contained	N/A
Ground Power Unit	Diesel, Electric or Ground-Power	1
Slave Pallet	125”/88” capable	1
Tractor	N/A	1
Dolly Wagon	125”/88” capable	Up to 4

UNCONTROLLED DOCUMENT (25 SEPTEMBER 2024 15:44:28)

5. Standard Turnover Times

Turn-around time for a transit stop: 00:25 hour (partial off- and on-load)
Turn-around time for an end stop: 00:35 hour (full off- and on-load)

UNCONTROLLED DOCUMENT
UNCONTROLLED DOCUMENT

UNCONTROLLED DOCUMENT (25 SEPTEMBER 2024 15:44:28)

6. Safety Areas

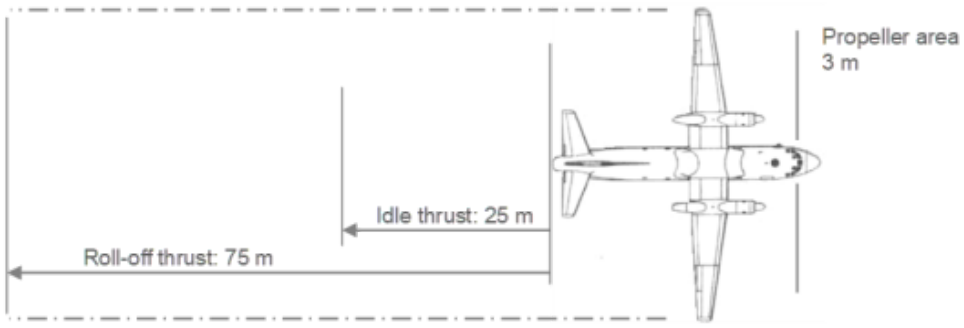

UNCONTROLLED DOCUMENT
UNCONTROLLED DOCUMENT

UNCONTROLLED DOCUMENT (25 SEPTEMBER 2024 15:44:28)

7. Strong Wind Conditions

All doors can be opened and left open, in any wind condition that will allow flight operations.

UNCONTROLLED DOCUMENT
UNCONTROLLED DOCUMENT

UNCONTROLLED DOCUMENT (25 SEPTEMBER 2024 15:44:28)

8. Aircraft Door Dimensions

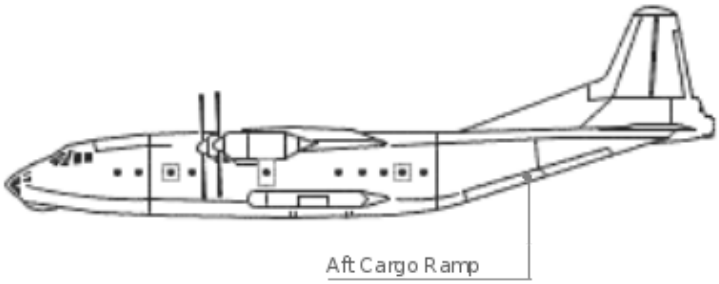

Door width, height, and sill height are defined as follows.

(This drawing is for illustration purposes only and may not be an exact representation of this aircraft type)

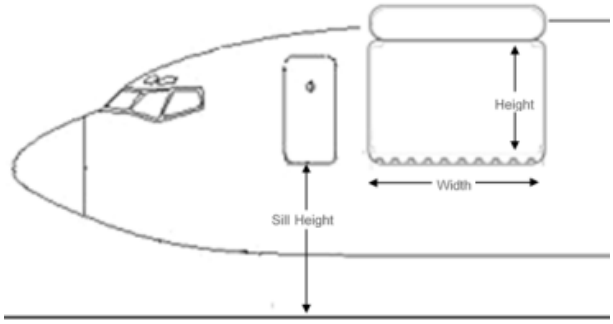

All dimensions are in centimetres (cm).

Door	Door Width	Door Height	Min. Door Sill Height	Max. Door Sill Height
AFT Cargo Door	245	295	(?)	(?)

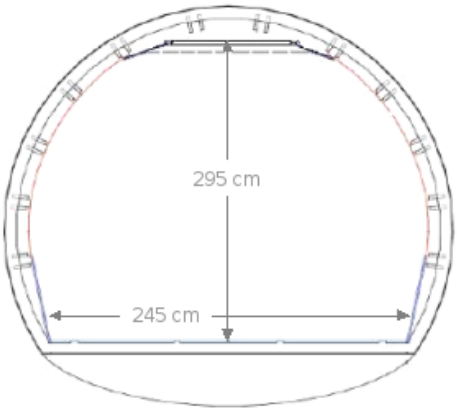

UNCONTROLLED DOCUMENT
UNCONTROLLED DOCUMENT

UNCONTROLLED DOCUMENT (25 SEPTEMBER 2024 15:44:28)

9. Compartment Classification and Air-Conditioning

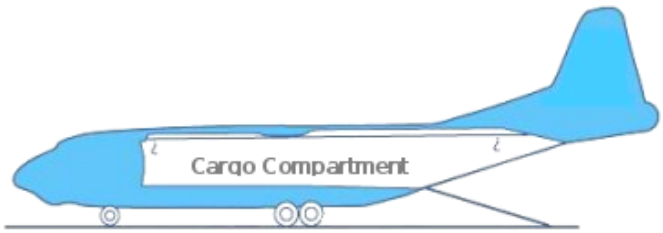

9.1 Compartment Classification

Compartment		Features
ULD Positions	Position A loaded with 125”/88” ULD **with** aisle	- Classification B
		- **No pressurisation**
		- Smoke detection
		- **Accessible** during flight

9.2 Air-Conditioning

	Main-deck
Temperature	0C - 30C
Heating	Yes
Heat Adjust	No
Cooling	Yes
Ventilation	Yes

UNCONTROLLED DOCUMENT
UNCONTROLLED DOCUMENT

UNCONTROLLED DOCUMENT (25 SEPTEMBER 2024 15:44:28)

10. Aircraft Cabin Contour Dimensions

10.1 Aircraft Layout Type 1

The aircraft is divided into 2 contour zones: A-A and B-B, as illustrated by the image below.



10.1.1 Contour Zones A-A and B-B Dimensions

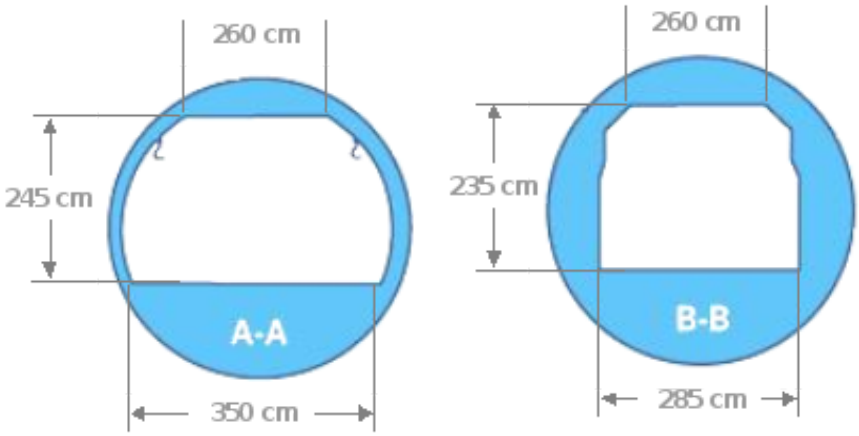

10.1.2 Main-deck Dimensions

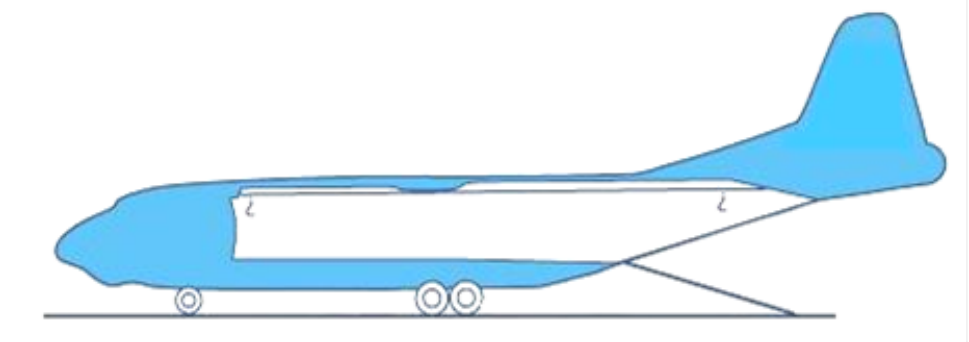

Max. Length (excl. ramp): 13.55 meters

Max. Height: 2.45 meters

Max. Width: 3.50 meters

UNCONTROLLED DOCUMENT
UNCONTROLLED DOCUMENT

UNCONTROLLED DOCUMENT (25 SEPTEMBER 2024 15:44:28)

11. Maximum Position Weights

11.1 Maximum Main-deck ULD Weights in Kilograms

	ULD Position			
ULD Size	A	B	C	D
108”/88”	(?)	(?)	(?)	(?)
Max floor load (Kg/m2)	(?)			

UNCONTROLLED DOCUMENT
UNCONTROLLED DOCUMENT

UNCONTROLLED DOCUMENT (25 SEPTEMBER 2024 15:44:28)

UNCONTROLLED DOCUMENT

12. Aircraft ULD Compatibility



Configuration 1: 4 Longitudinal 125"/88" positions

The following ULD type loading restrictions apply. The ULD type can be loaded on positions marked with a 'Y'. The ULD type cannot be loaded on positions marked with a 'N'.

		ULD Type					
	Pos	AAA	AAC	AAJ	LAK	LAY	PAG
Config. 1	A	Y	Y	Y	Y	Y	Y
	B	Y	Y	Y	Y	Y	Y
	C	Y	Y	Y	Y	Y	Y
	D	Y	Y	Y	Y	Y	Y

UNCONTROLLED DOCUMENT

UNCONTROLLED DOCUMENT

UNCONTROLLED DOCUMENT (25 SEPTEMBER 2024 15:44:28)

13. Loading and Un-loading

Risk of Tail-tipping.

13.1 Un-Loading Sequence

Un-load the ULDs on the main deck in the following numbered sequence, **and respect standard stage un-loading method**.



13.2 Loading Sequence

Load the ULDs on the main deck in the following numbered sequence, **and respect standard stage loading method**.



13.3 Loading Notes

13.3.1 Fork-lift Tipping

Due to the limited clearance under the tail, and the inherent tipping dangers associated with fork-lift/slave pallet operations, extreme care must be exercised during loading to prevent the fork-lift/slave pallet from tipping.

13.3.2 Tail-stand

For aircraft fitted with a tail-stand, it must be in correctly installed prior to any un-loading or loading activities.

UNCONTROLLED DOCUMENT
UNCONTROLLED DOCUMENT

UNCONTROLLED DOCUMENT (25 SEPTEMBER 2024 15:44:28)

14. Rigid, Oversized and Special Loads

For guidance on the handling of special loads, please refer to the Special Loads Regional Contact Instructions outlined in Chapter 6 **6. Cargo and ULD Handling**. Where direct operator approval is required, the Regional Airside Team will liaise with Global Airside as needed.

14.1 Floating / Heavy Pallets

ULDs which are heavier than the standard allowed maximum gross weight **must not** be carried on this aircraft.

14.2 Piercing Cargo

Piercing cargo may not be loaded on the first and/or last loaded position on the aircraft.

14.3 Aircraft Engines

Please consult with the operator.

14.4 Live Animals

14.4.1 Horses

Please consult with the operator.

14.4.2 Other Live Animals

The main-deck of this aircraft is not pressurised. As such AVI must be restricted to species that do not require oxygen supply (e.g. live fish), or the flight must be operated at or below 10.000ft (3.000m).

UNCONTROLLED DOCUMENT
UNCONTROLLED DOCUMENT

UNCONTROLLED DOCUMENT (25 SEPTEMBER 2024 15:44:28)

15. Restricted Commodities Loading

15.1 Radioactive (RRY), Magnetised (MAG) and Cargo Aircraft Only (CAO)

The following Dangerous Good type loading restrictions apply. The Dangerous Good type can be loaded on positions marked with a 'Y'. The Dangerous Good type cannot be loaded on positions marked with a 'N'.

	Position			
DG Type	A	B	C	D
MAG	N	N	Y	Y
CAO	Y	Y	Y	Y
RRY (Class 7)	N	N	Y	Y

Notes: Cargo Aircraft Only (CAO) can be loaded on any Main Deck position A to D provided they are loaded accessible. Accessible means that:

- The CAO is loaded on a pallet with aisle allowing access to the rear of the ULD.
- All positions forward of the CAO are loaded on pallets with aisle.

15.2 Dry Ice

The An-12 producer does not indicate maximum dry ice allowed on board. Therefore please refer to IATA Dangerous Goods Regulations, current edition.

15.3 Dry Ice (ICE) and Live Animals (AVI)

There is no additional weight limit for the loading of Dry Ice (ICE) together with Live Animals (AVI) on the Main-deck.

When loading AVI and ICE together in the main-deck, **keep a minimum distance of one loading position, and load AVI forward of ICE.**

Load the AVI higher than the ICE.

UNCONTROLLED DOCUMENT
UNCONTROLLED DOCUMENT

UNCONTROLLED DOCUMENT (25 SEPTEMBER 2024 15:44:28)

16. Messaging and Reporting

16.1 Messaging

Standard messaging rules apply.

Note: Specific messaging rules may apply depending on the area the aircraft is operating in. Check DHLAGOM for applicable regional variations.

16.2 Reporting

Standard reporting rules apply.

Note: Specific messaging rules may apply depending on the area the aircraft is operating in. Check DHLAGOM applicable regional variations.

UNCONTROLLED DOCUMENT
UNCONTROLLED DOCUMENT

UNCONTROLLED DOCUMENT (25 SEPTEMBER 2024 15:44:28)

17. Load Control Data

Not applicable.

UNCONTROLLED DOCUMENT
UNCONTROLLED DOCUMENT

UNCONTROLLED DOCUMENT (25 SEPTEMBER 2024 15:44:28)

UNCONTROLLED DOCUMENT

18. Maximum Package Dimensions

Maximum Usable dimensions:

Please consult with the operator.

UNCONTROLLED DOCUMENT

UNCONTROLLED DOCUMENT

UNCONTROLLED DOCUMENT (25 SEPTEMBER 2024 15:44:28)