UNCONTROLLED DOCUMENT

UNCONTROLLED DOCUMENT

BOX B777F
Aerologic B777F

Revision: 7
Date: 20 December 2024

1 Aerologic B777F Registrations
2 Aircraft Dimensions
3 Aircraft Servicing Points and Specifications
4 Ground Support Equipment
5 Chocking
6 Standard Turnaround Times
7 Safety Areas
8 Strong Wind Conditions
9 Aircraft Door Dimensions
10 Operating Aircraft Doors
11 Compartment Classification and Air-Conditioning
12 Aircraft Cabin Contour Dimensions
13 Maximum Position Weights
14 Aircraft ULD Compatibility
15 Loading and Un-Loading
16 Rigid, Oversized and Special Loads
17 Restricted Commodities Loading
18 Messaging and Reporting
19 Load Control Data
20 Maximum Package Dimensions
21 Contour Drawings

UNCONTROLLED DOCUMENT (20 DECEMBER 2024 10:36:21)

Page	Date	Comment
5	20 December 2024	Crew stairs height setting changed to 40cm below sill level. *(Important)*

UNCONTROLLED DOCUMENT

UNCONTROLLED DOCUMENT

UNCONTROLLED DOCUMENT

1. Aerologic B777F Registrations

IATA Designator:	**3S**
ICAO Designator:	**BOX**
Valid for:	**DAALA, DAALB, DAALC, DAALD, DAALE, DAALF, DAALG, DAALH, DAALI, DAALJ, DAALK, DAALL, DAALM, DAALN, DAALO, DAALP, DAALQ, DAALR, DAALS, DAALT, DAALU, DAALV**

UNCONTROLLED DOCUMENT

UNCONTROLLED DOCUMENT

UNCONTROLLED DOCUMENT (20 DECEMBER 2024 10:36:21)

2. Aircraft Dimensions

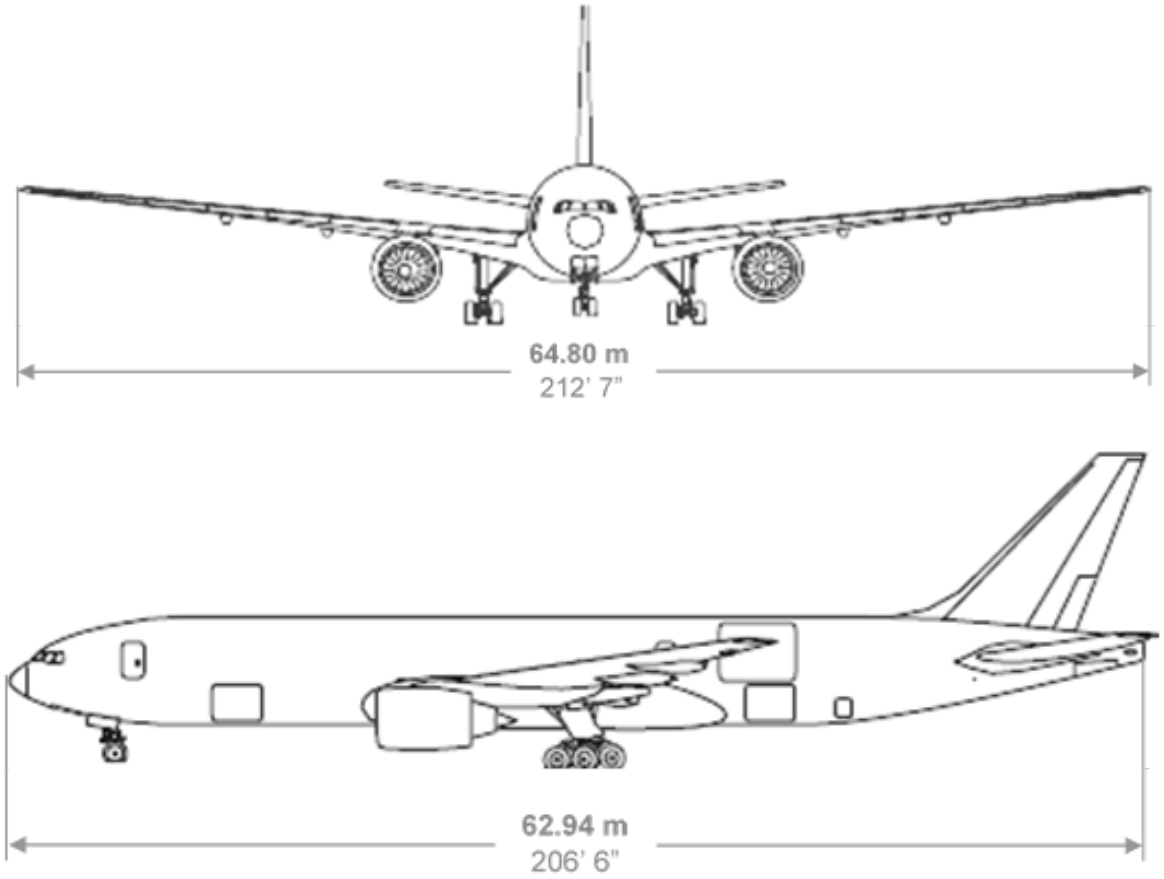

UNCONTROLLED DOCUMENT
UNCONTROLLED DOCUMENT

UNCONTROLLED DOCUMENT (20 DECEMBER 2024 10:36:21)

UNCONTROLLED DOCUMENT

3. Aircraft Servicing Points and Specifications

3.1 Servicing Points

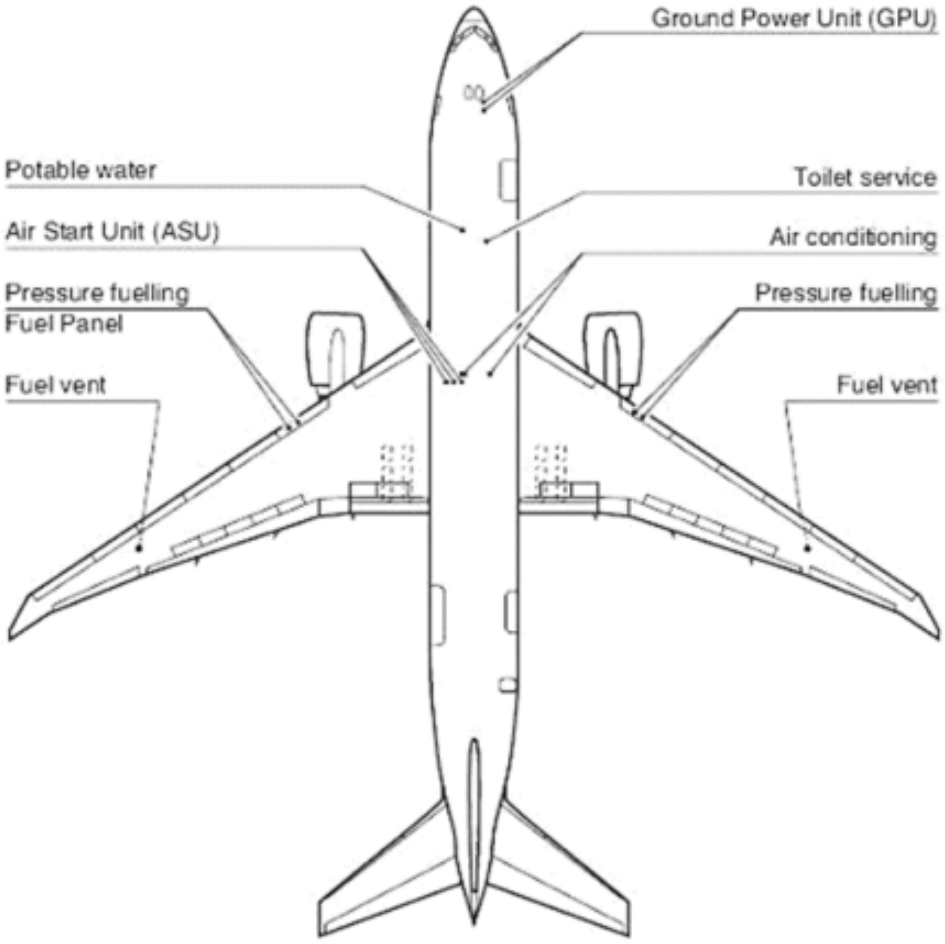

3.2 Servicing Specifications

System	Requirements	Notes
Ground Power Unit	115/200V AC / 90 kVA / 400 Hz	2 GPU connections required (2 x 90 kVA)
Fuel	Jet A1	Fuel Control Panel **on LH wing only**
Air Condition Unit	Maximum Flow Rate 1550 ppm	2 ACU inlets available
Air Start Unit	Minimum Capacity 375 ppm Pressure supply requirement: 30-45 psi Max. pressure 50 psi	3 ASU inlets available. ASU should preferably have two supply hoses 2 ASUs may be required, depending on flow rate and ambient air temperature. Never connect an ASU if an engine or the APU is running Use of bottled ASUs (compressed air start system) is not recommended

UNCONTROLLED DOCUMENT (20 DECEMBER 2024 10:36:21)

UNCONTROLLED DOCUMENT

4. Ground Support Equipment

4.1 Positioning of GSE

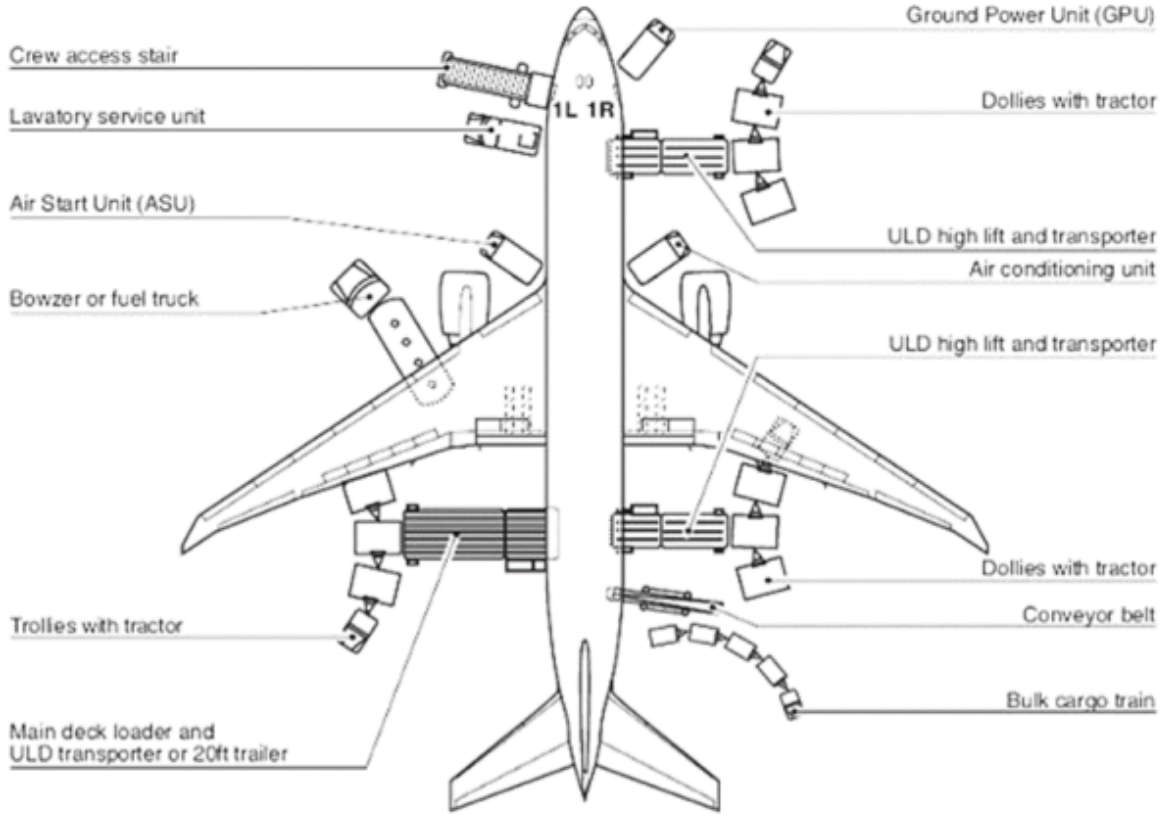

4.2 GSE Requirements

GSE	Type	Quantity
High Loader	Main-deck Standard	1 2
Crew stairs	Platform height 4.65 – 5.04 meters Note: Place top platform 40cm (16in) below sill level	1
Ground Power Unit	Diesel, Electric or Ground-Power	1
Belt Loader	Standard (9 meter recommended)	1
Tractor	N/A	6
Dolly Wagon Main-deck	125/88” and 125/96” capable	Up to 27
	16 & 20ft capable	Up to 9
Dolly Wagon Lower-deck	125/88” and 125/96” capable	Up to 10
	60.4/61.5” or 60.4/125” capable	Up to 16
Belly Container / Wagon	As required	According to load

UNCONTROLLED DOCUMENT (20 DECEMBER 2024 10:36:22)

UNCONTROLLED DOCUMENT

5. Chocking

Standard chocking procedure except:

After chocking outboard main-gear wheels forward and aft, remove nose-gear chocks and confirm parking brakes released.

Note: Chocks shall not be shorter than the aircraft's wheel width.

Standard de-chocking procedures except:

- Connect towbar and pushback
- Receive confirmation via headset that parking brake is set.
- Remove all chocks



Chocks shall not be removed without permission from the walk-out assistant or flight crew. All remaining chocks shall not be removed until the pushback tractor / lifter is fully connected to the aircraft, all GSE have been positioned in the demarcated GSE parking zone and confirmation is received from the cockpit that the parking brake is set.

UNCONTROLLED DOCUMENT

UNCONTROLLED DOCUMENT

UNCONTROLLED DOCUMENT (20 DECEMBER 2024 10:36:22)

UNCONTROLLED DOCUMENT

6. Standard Turnaround Times

DHL Stations

Turn-around time for a transit stop: 01:30 hour (partial off- and on-load)
Turn-around time for an end stop: 02:00 hour (full off- and on-load)

Luthansa Stations

Turn-around time for a transit stop: 01:30 hour (partial off- and on-load)
Turn-around time for an end stop: 02:30 hour (full off- and on-load)

UNCONTROLLED DOCUMENT

UNCONTROLLED DOCUMENT

UNCONTROLLED DOCUMENT (20 DECEMBER 2024 10:36:22)

7. Safety Areas

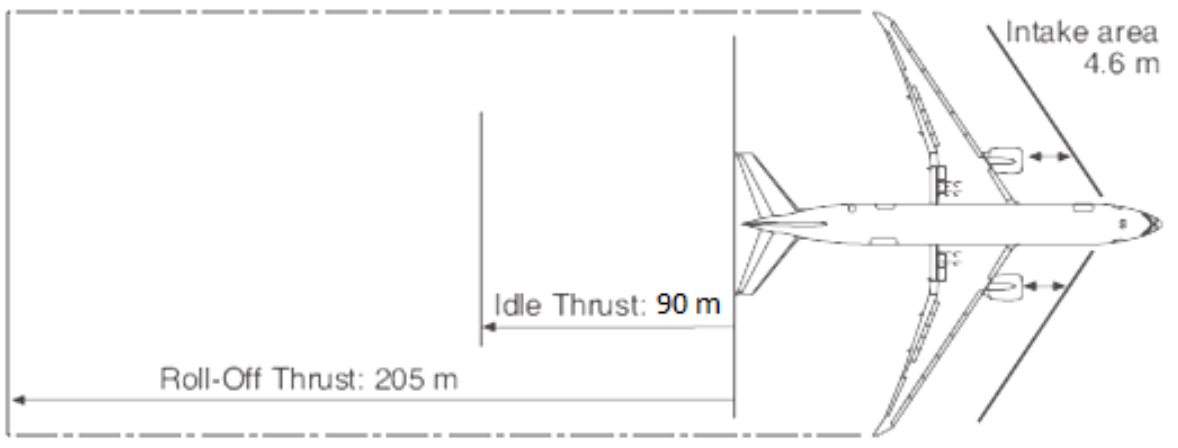

UNCONTROLLED DOCUMENT
UNCONTROLLED DOCUMENT

UNCONTROLLED DOCUMENT (20 DECEMBER 2024 10:36:22)

UNCONTROLLED DOCUMENT

8. Strong Wind Conditions

If the wind conditions on the ramp reach the following speeds, the corresponding actions shall be taken.

Wind Speed	Action
Up to 40 knots	Normal Operations: All doors can be opened and left open
More than 40 knots	Do not open additional doors
More than 65 knots	All open doors shall be closed immediately

Note:

The landing gears shall be chocked in Strong Wind Conditions as detailed in **4.2 - Aircraft Chocking**. The chocks shall be placed approximately 5cm (2in) from the wheels.

UNCONTROLLED DOCUMENT

UNCONTROLLED DOCUMENT

UNCONTROLLED DOCUMENT (20 DECEMBER 2024 10:36:22)

9. Aircraft Door Dimensions

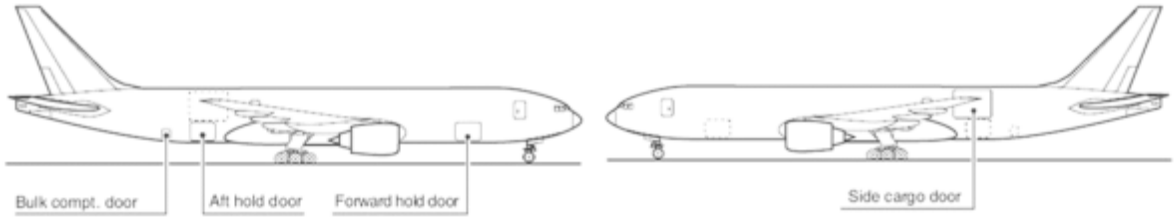

Door width, height, and sill height are defined as follows.

(This drawing is for illustration purposes only and may not be an exact representation of this aircraft type)

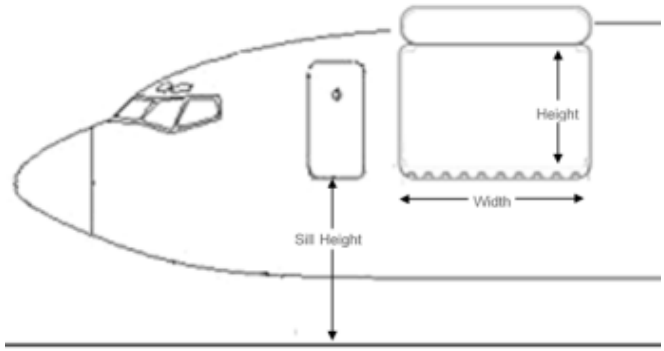

All dimensions are in centimetres and inches shown in ( ).

Door	Door Width	Door Height	Min. Door Sill Height	Max. Door Sill Height
Crew Door	-	-	465 (183)	504 (198.4)
Main Deck	362 (142.5)	305 (120)	529 (208.3)	553 (217.7)
Forward Hold	269 (105.9)	170 (70)	277 (109)	311 (122.4)
Aft Hold	289 (113.8)	170 (70)	332 (130.7)	356 (140.2)
Bulk Hold	90 (35.4)	121 (47.6)	350 (137.8)	378 (148.8)

Note:

The maximum height for a lower-deck ULD is 163 cm (64”).

UNCONTROLLED DOCUMENT
UNCONTROLLED DOCUMENT

UNCONTROLLED DOCUMENT (20 DECEMBER 2024 10:36:22)

10. Operating Aircraft Doors

Only fully trained and certified staff are allowed to operate the Main Cargo Door.

There are two panels which may be used to operate the Main Cargo Door. One is located forward of the Main Cargo Door in the Main-deck cargo compartment, illustrated by this drawing:

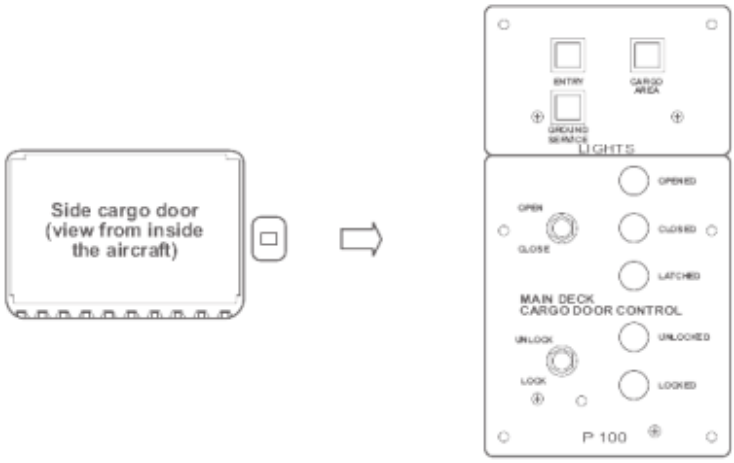

The other panel is located inside and forward of the L1 door.

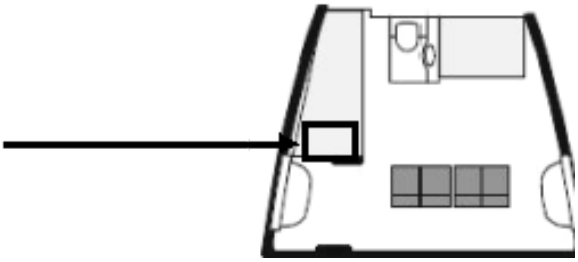

When closing Lower Deck Cargo Doors, the doors shall be latched before locking them. To latch the door, press and hold the “cargo door control” lever to the “close” setting. Hold the lever for two seconds after the “door latched” light has turned green to ensure the door is properly closed.



In case of any irregularities, please contact the local line maintenance immediately or the AeroLogic MOC +49 34204 443 444

UNCONTROLLED DOCUMENT (20 DECEMBER 2024 10:36:22)

UNCONTROLLED DOCUMENT

11. Compartment Classification and Air-Conditioning

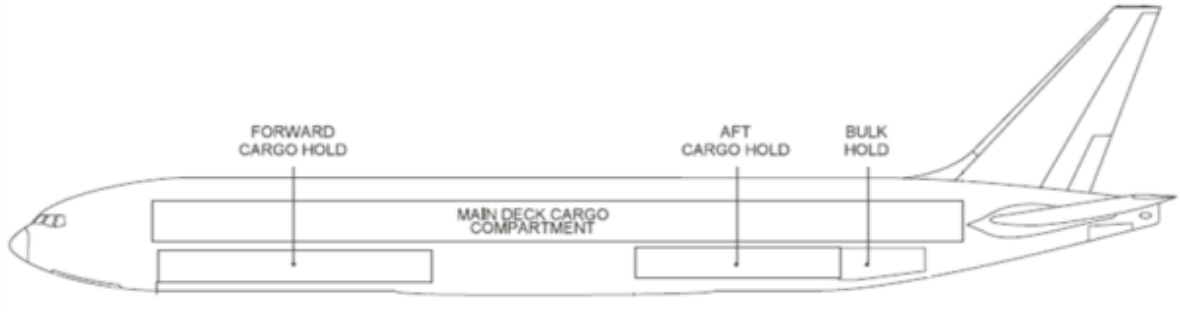

11.1 Compartment Classification

Compartment		Features
Main-deck	Positions AL & AR loaded with 88" ULD **or** 96" ULD **with** 25 cm (10") aisle	- Classification **B**
		- Pressurisation
		- Smoke Detection
		- **Accessible** during flight
	Positions AL & AR loaded with 96" ULD **without** 25 cm (10") aisle	- Classification **E**
		- Pressurisation
		- Smoke Detection
		- **In-accessible** during flight
Lower-deck Compartments 1, 2, 3, 4 and 5		- Classification **C**
		- Pressurisation
		- Smoke Detection
		- **In-accessible** during flight
		- Fire Suppression

11.2 Air-Conditioning

	Main-deck	Forward Hold	Aft Hold	Bulk Hold
Temperature	5C to 27C			
Heating	Yes			
Heat adjust	Yes			
Cooling	Yes			
Ventilation	Yes			

UNCONTROLLED DOCUMENT (20 DECEMBER 2024 10:36:22)

UNCONTROLLED DOCUMENT

12. Aircraft Cabin Contour Dimensions

12.1 Aircraft Layout

The aircraft is divided into three contour zones: JI, JIII and JIV.

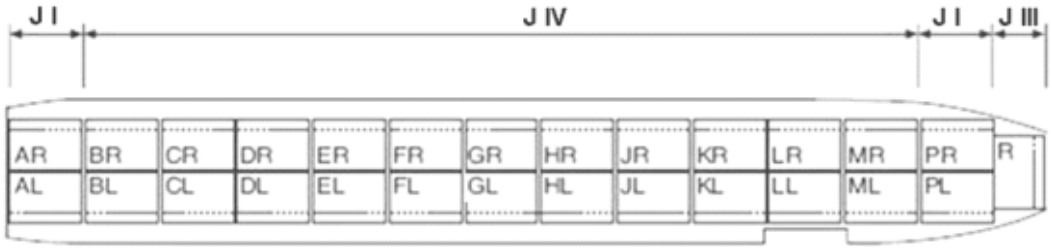

12.2 Contour J1

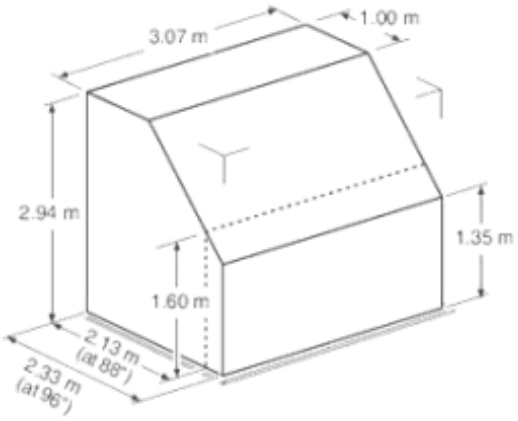

12.3 Contour JIII

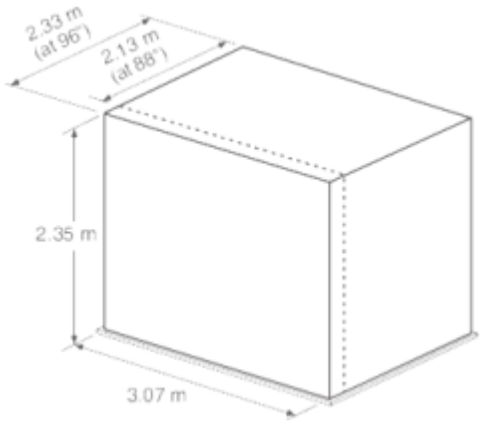

It is allowed to load A contour containers (e.g. AMA) on position R. Do not load pallets built to A contour on position R.

UNCONTROLLED DOCUMENT (20 DECEMBER 2024 10:36:22)

UNCONTROLLED DOCUMENT

12.4 Contour JIV

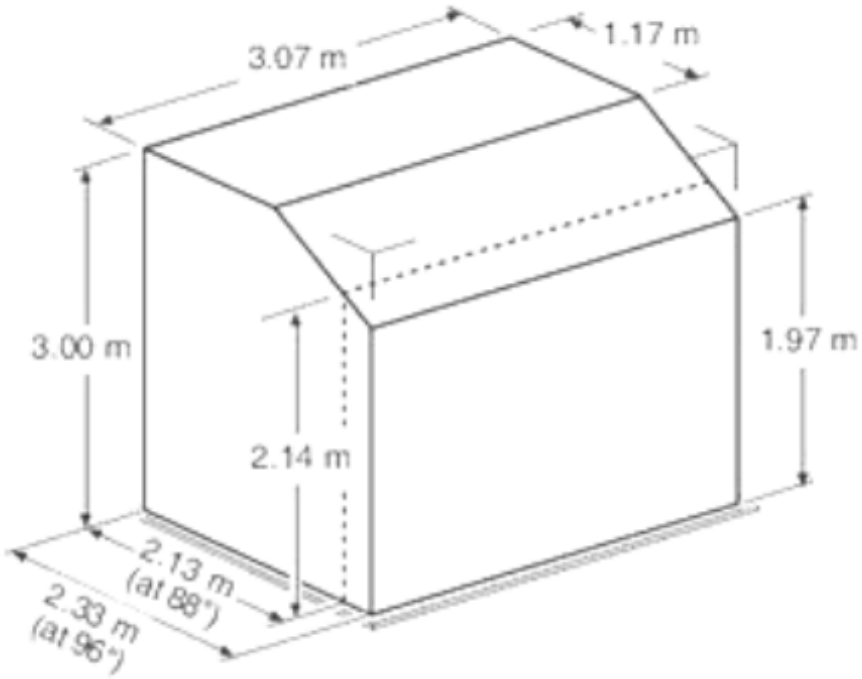

12.5 16' and 20' Pallet Position Contours

BL thru KL:

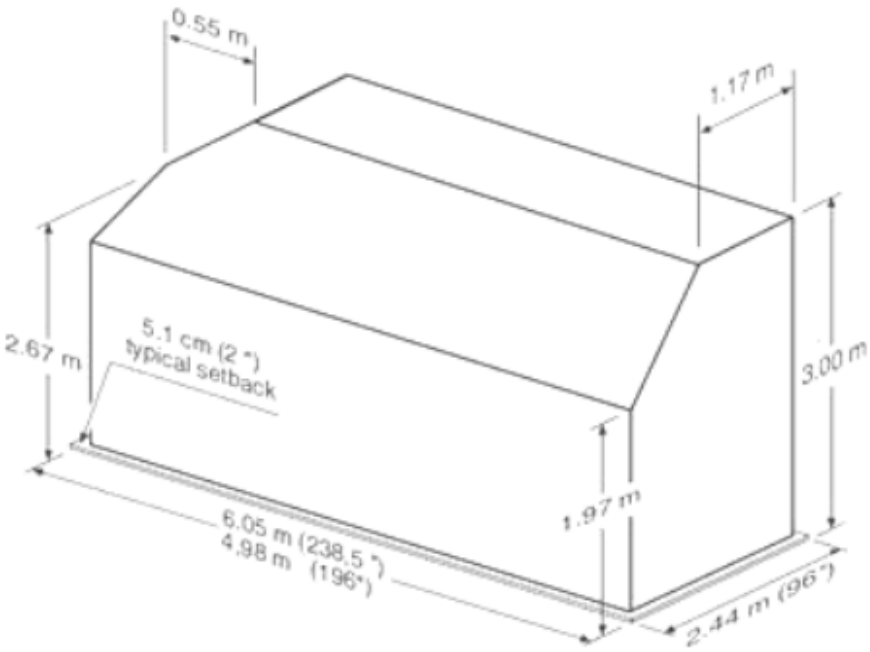

UNCONTROLLED DOCUMENT

UNCONTROLLED DOCUMENT (20 DECEMBER 2024 10:36:22)

UNCONTROLLED DOCUMENT

BR thru KR, MR thru PR:

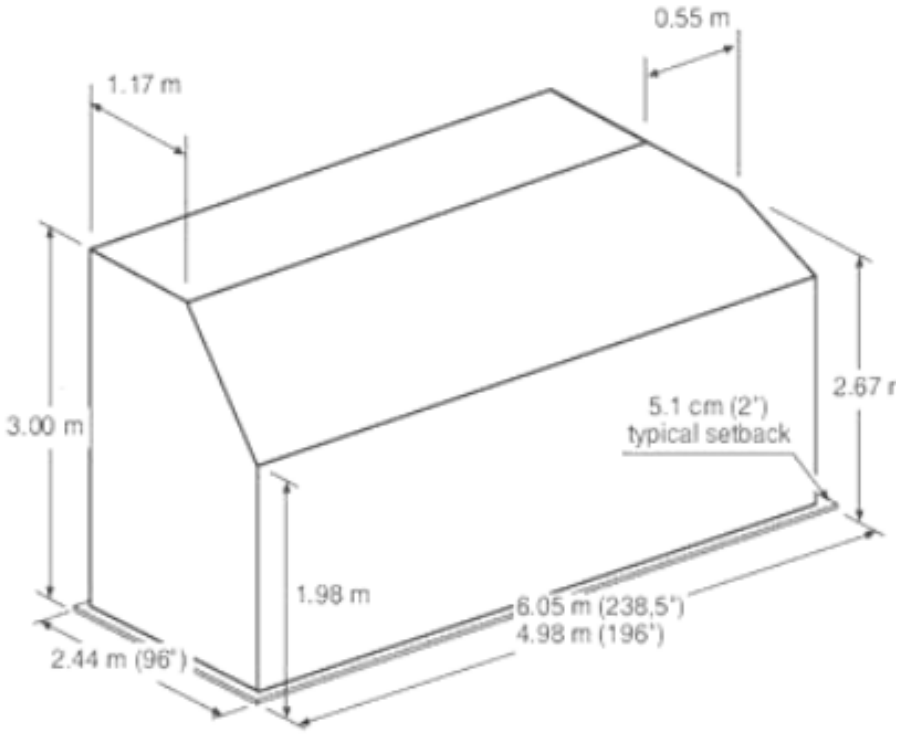

Note: BR thru KR, MR thru PR has the same contour but up to a maximum height of 2.9m.

Centre-Line positions EF, GH and JK:

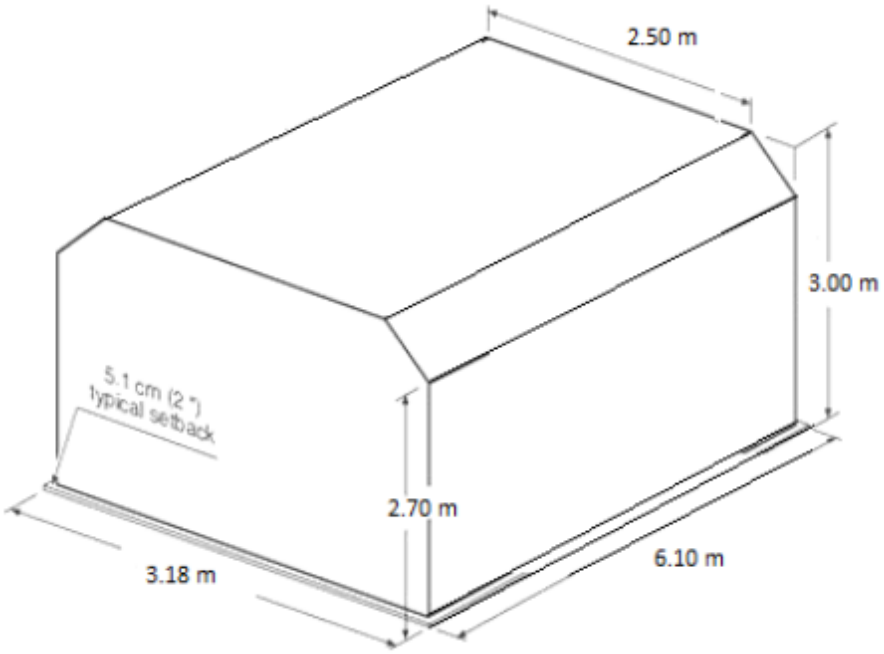

UNCONTROLLED DOCUMENT

UNCONTROLLED DOCUMENT (20 DECEMBER 2024 10:36:22)

Laterally loaded 16' F, G, H, L and M:

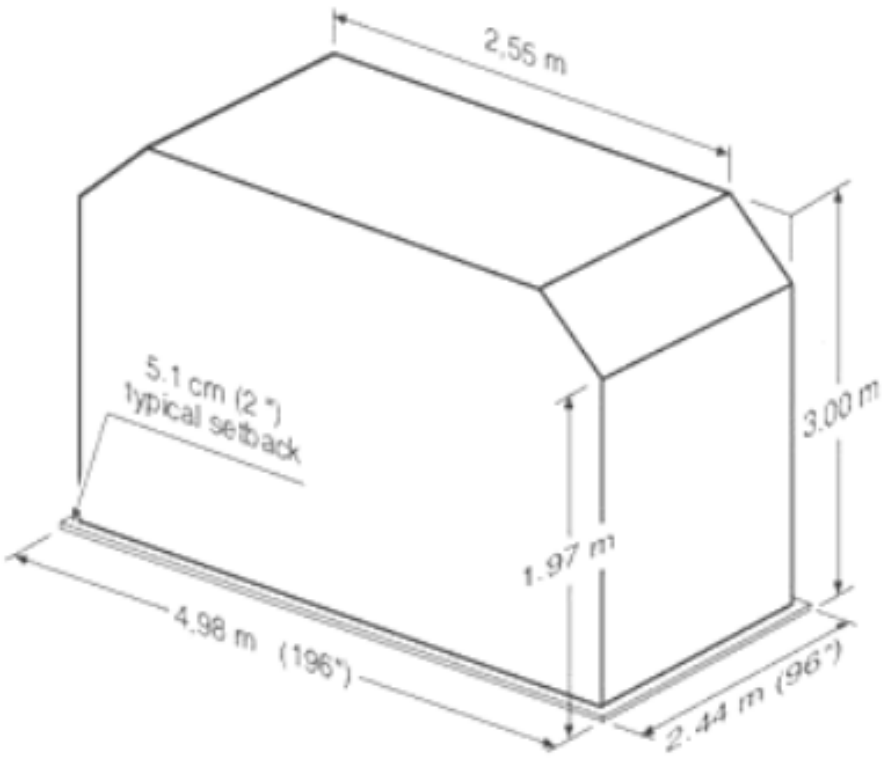

Note: Positions G and H are only available on D-AALK to -AALT. Positions F, G and H not possible on D-AALU due to missing locks

12.6 Centre-line 125"/96" ULD Position Contours:

Positions B to M. Position P has the same contour up to a maximum height of 2.85m.

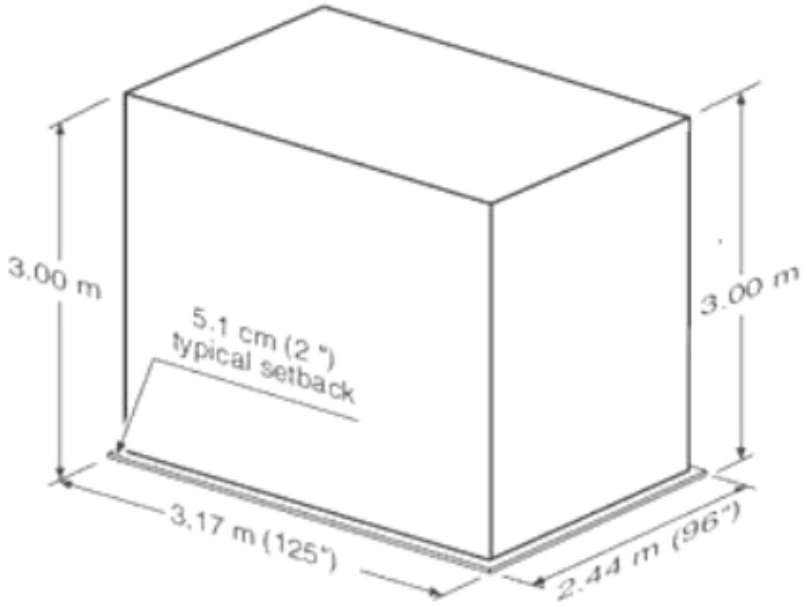

UNCONTROLLED DOCUMENT
UNCONTROLLED DOCUMENT

UNCONTROLLED DOCUMENT (20 DECEMBER 2024 10:36:22)

12.7 Lower Deck Compartment Dimensions

Aft Hold (Compartments 3, 4 & 5)

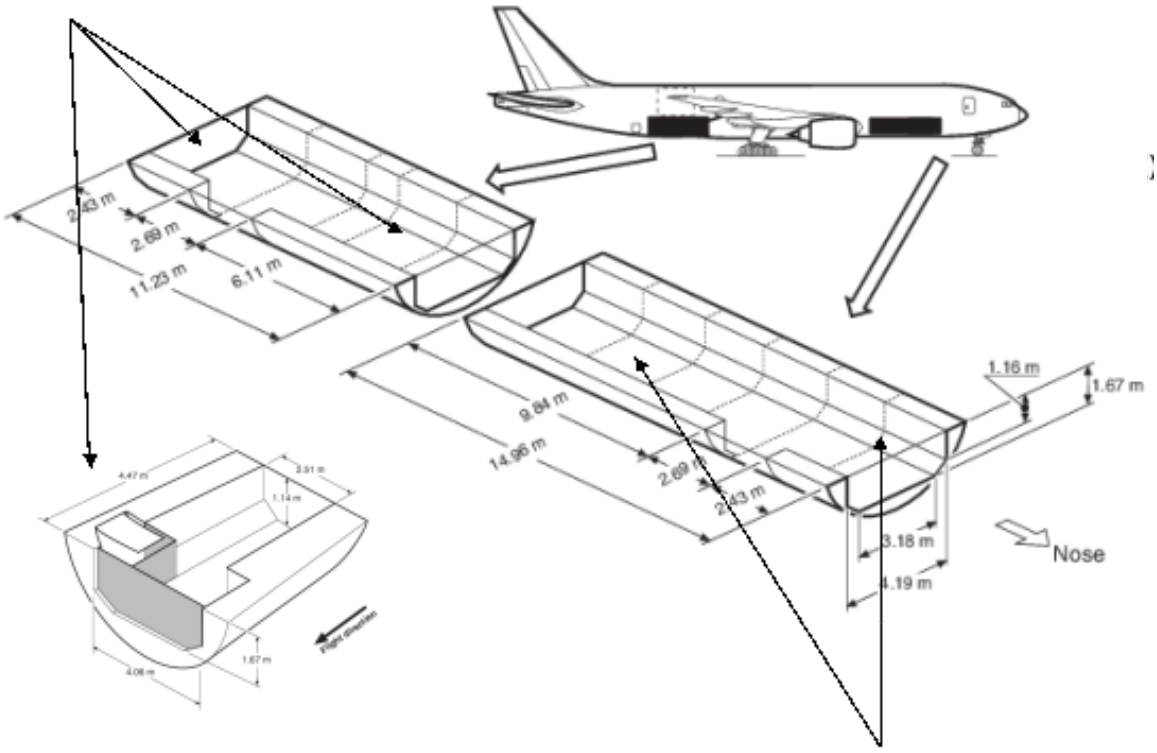

Forward Hold (Compartments 1 & 2)

UNCONTROLLED DOCUMENT
UNCONTROLLED DOCUMENT

UNCONTROLLED DOCUMENT (20 DECEMBER 2024 10:36:22)

13. Maximum Position Weights

13.1 Maximum Main-deck ULD Weights in Kilograms

	ULD Position													
ULD Size	A	B	C	D	E	F	G	H	J	K	L	M	P	R
88” Twin-track	5887					6032			5887					3233
96” Twin-track						6803								3527
16ft right		9231				11339			9231			9231 (3)		
16ft left														
16ft alternate					9231			9231						
16ft Lateral						1139 (1) (6) 9525 (5) (6)					6268 (1) 5266 (5)			
20 ft right		11233				11339			11233			11233 (3)		
20 ft left														
20ft alternate					11233			11233						
96” Centre (4)	5887					6803					5887			
16ft Centre (4)						11339 (2)								
16ft Centre alternate (4)					9231			9231						
20ft Centre (4)						11339 (2)								
20ft Centre alternate (4)					11233			11233						
Max. Running Load (kg/m)	2566					4677			2566					
Max. Floor Load (kg/m²)	1464													

(1) Restraints must be set accordingly

(2) Special permission possible for 16ft up to 17880 kg and for 20ft up to 21070 kg. See **15.1 Floating / Heavy Pallets.**

(3) On position MR/PR use J1 contour only

(4) For Centerload loaded with rigid/piercing cargo observe Rigid Cargo Rules.

(5) If straps are used as the primary method to secure the cargo on the ULD

(6) 16ft lateral load on position G/H is not possible on registration DAALA, DAALB, DAALC, DAALD, DAALE, DAALF, DAALG, DAALH, DAALI, DAALJ

The maximum weight of the opposite lane (max. lateral unsymmetrical load) as well as the cumulative load of positions M/P/R and Compartment 5 can only be checked in SABLE

UNCONTROLLED DOCUMENT
UNCONTROLLED DOCUMENT

UNCONTROLLED DOCUMENT (20 DECEMBER 2024 10:36:22)

13.2 Additional Restrictions for Main-deck loads

13.2.1 Lateral Imbalance

The maximum lateral imbalance depends on the actual take-off or landing weight and can be derived from the following table. In general, the higher the take-off or landing weight, the lower the maximum allowed lateral imbalance. It is always the more restrictive weight that applies.

Difference Weight between left and right side (kg)	Restrictions	
	MTOW (kg)	MLAW (kg)
Up to 11.000	No restriction	
12.000	341169	257042
13.000	340614	256728
14.000	340081	256413
15.000	339508	256099
16.000	338954	255784
17.000	338400	255470
18.000	337846	255155
19.000	337292	254841
20.000	336739	254527
21.000	336185	254212
22.000	335631	253898
23.000	335077	253583
24.000	334523	253269
25.000	333970	252955
26.000	333418	252640
27.000	332862	252326
28.000	332308	252011
29.000	331754	251697
30.000	331200	251382
31.000	330647	251068
32.000	330093	250754
33.000	329539	250439
34.000	328985	250125
35.000	328431	249810
36.000	327878	249496
37.000	327324	249181
38.000	325770	248867

13.2.2 Maximum Lateral Unsymmetrical Load

Maximum unsymmetrical load restrictions only apply if any ULD in twin-row configuration weighs more than 4500 kg. If so, then the ULD in the opposite side may have a restricted maximum weight.

These restrictions have been incorporated into the Sable system.

UNCONTROLLED DOCUMENT
UNCONTROLLED DOCUMENT

UNCONTROLLED DOCUMENT (20 DECEMBER 2024 10:36:22)

UNCONTROLLED DOCUMENT

UNCONTROLLED DOCUMENT

13.3 Maximum Lower-deck Compartment Weights in Kilograms

13.3.1 Forward Hold

Compt	Position	Max. Gross Weight per ULD (in kilograms)				Max. running Load (kg/m)	Max. Capacity	Max. Floor Load (kg/m²)
		88"/125"	96"/125"	60.4"/61.5" (AKE)	60.4"/125" (ALP)			
1	11P	4676	5102			2090	30617	976
	12P							
	13P							
	11L/R - 14L/R			1588	3175			
2	21P	4676	5102					
	22P							
	23P	5102	6350			3106		
	21 L/R - 25 L/R			1588	3175	2090		

13.3.2 Aft Hold

Compt	Position	Max. Gross Weight per ULD (in kilograms)				Max. running Load (kg/m)	Max. Capacity	Max. Floor Load (kg/m²)
		88"/125"	96"/125"	60.4"/61.5" (AKE)	60.4"/125" (ALP)			
3	31P	5102	6350			3106	22226	976
	32P	4676	5102			2090		
	31L/R - 33L/R			1588	3175			
4	41P	4676	5102					
	42P							
	41L/R - 44L/R			1588	3175			

13.3.3 Bulk Hold

Compt.	Volume (m3)	Max. floor load (kg/m2)	Max. Weight (kg)
5	16.8	730	4082*

*If using the maximum capacity of the compartment, consider the weight of any crew baggage loaded.

UNCONTROLLED DOCUMENT (20 DECEMBER 2024 10:36:22)

UNCONTROLLED DOCUMENT

13.4 Weight Restrictions due to Missing or Broken Restraints

Strictly observe the following restrictions:

- A missing or unserviceable restraint must never be replaced by a tie-down strap attached to the aircraft structure.
- The Missing or Unserviceable Restraints procedure detailed below does not allow for the application of said procedure in the following cases:
  - When restraints cannot be raised due to the minimum clearance of 8cm between cargo build-up and the pallet base (e.g. cargo on pallet rim or overlapping the pallet edge).
  - When a restraint was not raised during loading by the ground staff.
- All operable restraints must be raised.

If one or two restraints per position are missing or unserviceable:

- Check the chart below for the restriction of the maximum gross weight per ULD on this loading position.
- Unserviceable restraints must not be next to each other.
- Unserviceable restraints must not be adjacent to a common corner.

If more restraints than shown in the chart below are missing or unserviceable:

- Leave the position empty
- All end stops at both ends of the hold must be serviceable.

Please refer to the Sable system for restrictions when one or more restraints are unserviceable around any given position, on either the Main-Deck or Lower-Deck.

The chart below may be used for planning and training purposes, and reflects the actual restriction incurred if one or more restraints around any given position are damaged or missing.

UNCONTROLLED DOCUMENT

UNCONTROLLED DOCUMENT (20 DECEMBER 2024 10:36:22)

UNCONTROLLED DOCUMENT

13.4.1 Main-deck

Max. Weight per ULD in Kilograms:

ULD	missing restraint	A	B	C	D	E	F	G	H	J	K	L	M	P	R
88" x 125" fwd or aft	one	N/R					N/R			N/R					2 350
88" x 125" upward		5 483					5 757			5 887					N/R
88" x 125" side		N/R					5 796			4 954					N/R
88" x 125" fwd or aft	two	4 696					5 426			4 703					1 935
88" x 125" upward		4 829					5 521			5 724					2 833
88" x 125" side		5 515					4 391			3 663					2 550
96" x 125" fwd or aft	one	N/R					6 636			N/R					N/R
96" x 125" upward		N/R					N/R			N/R					3 318
96" x 125" side		5 442					N/R			4 975					2 350
96" x 125" fwd or aft	two	4 672					4 679			4 679					N/R
96" x 125" upward		5 620					N/R			5 620					2 825
96" x 125" side		3 953					6 457			3 727					1 935
Longitudal loading															
96"x196" (16 ft.) right	one *			6 933			8 504			6 933			6 933		
96"x196" (16 ft.) left															
96"x196" (16 ft.) right	two *			4 622			5 669			4 622			4 622		
96"x196" (16 ft.) left															
96"x238,5" (20 ft.) right	one *			9 244			N/R			9 244			9 244		
96"x238,5" (20 ft.) left															
96"x238,5" (20 ft.) right	two *			6 933			8 573			6 933			6 933		
96"x238,5" (20 ft.) left							8 504								
Lateral loading **															
96"x196" (16 ft.) fwd or aft	one						N/R					6 268			
96"x196" (16 ft.) up / side							9 834					5 995			
96"x196" (16 ft.) fwd or aft	two						8 932					6 268			
96"x196" (16 ft.) up / side							6 920					4 132			
Center loading															
96"x125"	one	5887					6 247			5887					
96"x125"	two	4 639													
96"x196" (16 ft.) up/side	one					9 231	10 179			9 231					
96"x196" (16 ft.) fwd/aft						8 504									
96"x196" (16 ft.) up/side	two					8 219									
96"x196" (16 ft.) fwd/aft						5 669									
96"x238,5" (20 ft.) up/side	one					10 327									
96"x238,5" (20 ft.) fwd/aft						N/R									
96"x238,5" (20 ft.) up/side	two					9 296									
96"x238,5" (20 ft.) fwd/aft						8 504									

(Notes continued next page)

UNCONTROLLED DOCUMENT (20 DECEMBER 2024 10:36:22)

UNCONTROLLED DOCUMENT

Notes:

N/R stands for “No Restriction”

Swivel restraints must be considered for upward forces only; missing/unserviceable 16/20ft ULD pockets/blocks must be considered in combination with side locks only.

If straps are used as the primary method to secure the cargo on the ULD, more restricted max weights might apply see BOX GOM 4.10.10.1 *Main Deck Weight Limitations.* 16ft lateral load positions on G and H are note possible on DAALA, DAALB, DAALC, DAALD, DAALE, DAALF, DAALG, DAALH, DAALI, DAALJ.

UNCONTROLLED DOCUMENT

UNCONTROLLED DOCUMENT

UNCONTROLLED DOCUMENT (20 DECEMBER 2024 10:36:22)

UNCONTROLLED DOCUMENT

13.4.2 Forward Lower deck

60,4" x 61,5"
or 60,4" x 125"

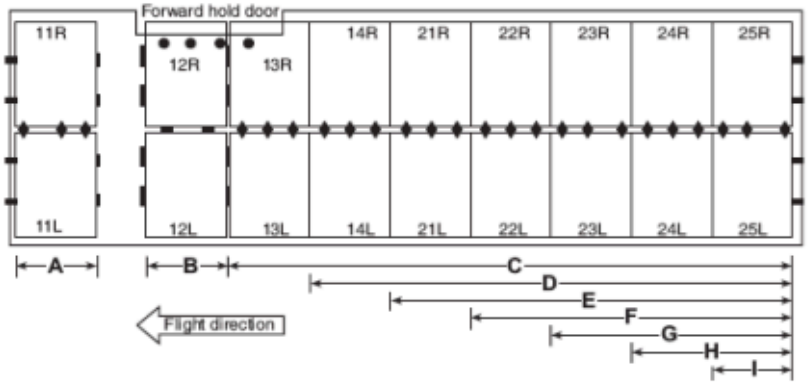

	Max. weight per zone and lane for 60,4"x 61,5" ULD (incl. stack loading)									
Zone	A		B	C	D	E	F	G	H	I
Max. 1 fwd **or** aft	1 587		1 587	9 507	8 042	7 937	6 350	4 000	3 175	1 587
Single ULD	Max. 3 vertical / side restraints may be missing without restriction. **Exception:** Zone B max. 1 v/s restraints may be missing without restriction.									

	Max. weight per zone and lane for 60,4"x 125" ULD (incl. stack loading)									
Zone	A		B	C	D	E	F	G	H	I
Max. 1 fwd **and** 1 aft	3 175		3 009	10128	9 085	9 085	9 085	4 517	4 517	3 175
Single ULD	Max. 1 vertical / side restraints may be missing without restriction. **Exception:** Zone B max. 2 v/s restraints may be missing without restriction.									

88" x 125"

Restraint		ULD positions (restriction in kg.)					
Direction	No. missing	11P	12P	13P	21P	22P	23P
All (except vertical)	1	3 828				3 469	3 828
	2	2 549				2 313	2 549
Vertical	up to 5	no restriction					

96" x 125"

Restraint		ULD positions (restriction in kg.)					
Direction	No. missing	11P	12P	13P	21P	22P	23P
All (except vertical)	1	3 401	3 828				
	2	2 549					
Vertical	up to 5	no restriction					

UNCONTROLLED DOCUMENT (20 DECEMBER 2024 10:36:22)

UNCONTROLLED DOCUMENT

13.4.3 Aft Lower deck

60,4" x 61,5"
or 60,4" x 125"

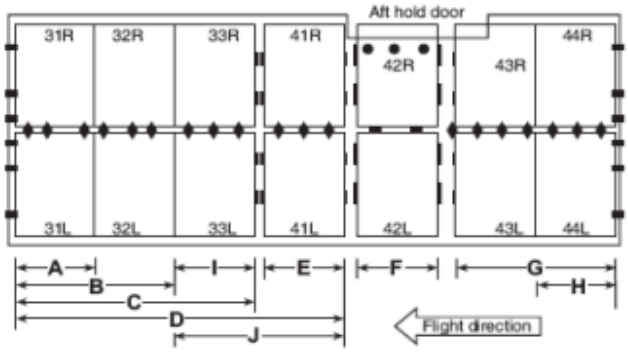

	Max. weight per zone and lane for 60,4"x 61,5" (incl. stack loading)									
Zone	A	B	C	D	E	J	F	G	H	I
Max. 1 fwd **or** aft	NR	NR	4 000	5 268	1 324	N/R	N/R	N/R	N/R	NR
Single ULD	Max. 3 vertical / side restraints may be missing without restriction. **Exception:** Zone F max. 1 v/s restraints may be missing without restriction.									

	Max. weight per zone and lane for 60,4"x 125" (incl. stack loading)									
Zone	A	B	C	D	E	J	F	G	H	I
Max. 1 fwd **and** 1 aft	NR	4 517	4 517	6 345	1 496	4 939	3 009	N/R	N/R	NR
Single ULD	Max. 1 vertical / side restraint may be missing without restriction. **Exception:** Zone F max. 2 v/s restraints may be missing without restriction.									

88" x 125"

Restraint		ULD positions (restriction in kg.)			
Direction	No. missing	31P	32P	41P	42P
All (except vertical)	1	3 828			
	2	2 549			
Vertical	up to 5	no restriction			

96" x 125"

Restraint		ULD positions (restriction in kg.)			
Direction	No. missing	31P	32P	41P	42P
All (except vertical)	1	3 828			
	2	2 549			
Vertical	up to 5	no restriction			

UNCONTROLLED DOCUMENT (20 DECEMBER 2024 10:36:22)

14. Aircraft ULD Compatibility

14.1 Main Deck Configurations

The loading combinations shown here are examples only. More combinations are possible. Full information covering possible loading combinations, and how they interact, can be found in the Sable system.

Note that when 20ft ULDs are loaded over positions DE and/or HJ, they cover the pallet locks of the next position (either forward or aft, depending on the exact position of the 20ft. ULD). It is then not possible to load 88" x 125" ULD or 96" x 125" ULD on the next position (either forward or aft).

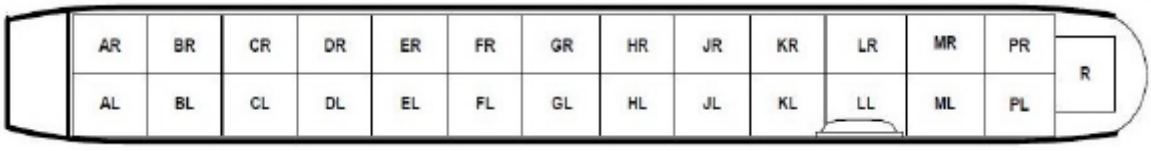

Configuration 1: 1 Lateral Centre-line and 26 Longitudinal Twin-track 125”/96” or 125”/88” positions

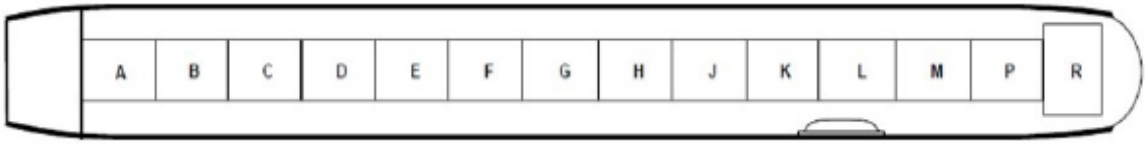

Configuration 2: 13 Centre-line Longitudinal 125”/96” ULDs

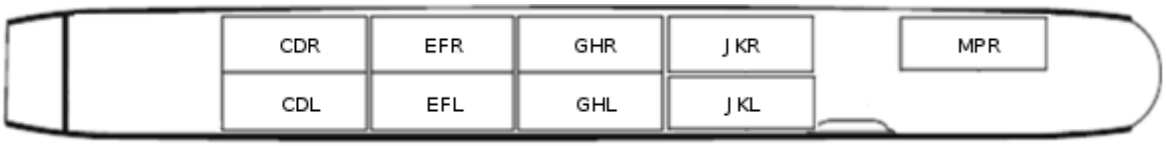

Configuration 3a: 9 Longitudinal Twin-track 16ft or 20ft ULDs



Configuration 4: 3 Lateral 16ft ULDs

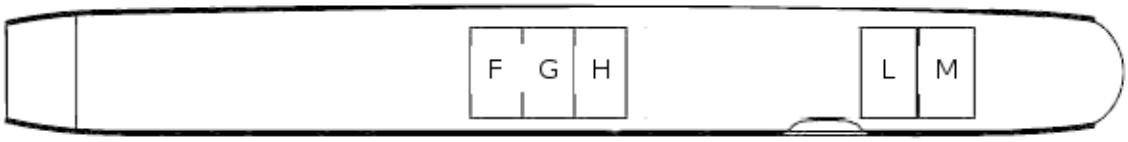

Configuration 4a (Valid for DAALK to DAALT, DAALV only): 5 Lateral 16ft ULDs

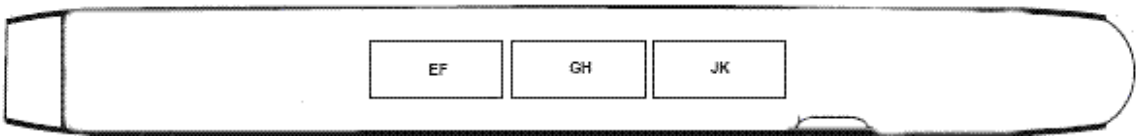

Configuration 5a: 3 Centreline longitudinal 16/20ft ULDs

UNCONTROLLED DOCUMENT
UNCONTROLLED DOCUMENT

UNCONTROLLED DOCUMENT (20 DECEMBER 2024 10:36:22)

UNCONTROLLED DOCUMENT

14.1.1 Notes for moveable locks

The lateral loading on the positions mentioned is possible, but:

- Do not load ULDs laterally if a solid metal frame is directly attached to the 16ft ULD. Note: Shipments mounted on a metal frame and tied down by a net or straps can be loaded.
- Position HL/HR move the forward row of locks aft.
- On Position HL/HR reposition the rollers as follows:
  - Move the aft rollers 3 inches to the rear
  - Move the forward roller forward by 4 inches
- Position LL/LR move the aft row of locks forward
- On position LL/LR reposition the casters ensuring equal distanced between them
- Position ML/MR move the forward row of locks aft.
- Ensure that the black markings on top of the locks align with the yellow markings on the floor.
- After unloading lateral loads, reposition the locks to their standard positions and relocate the rollers or casters.

If 16ft ULDs are loaded on Positions H, L and /or M, locks need to be relocated. This shall be done by the Ramp Staff at the departure station.

The receiving station where such units are finally unloaded shall re-arrange the locks to the normal position.

UNCONTROLLED DOCUMENT

UNCONTROLLED DOCUMENT

UNCONTROLLED DOCUMENT (20 DECEMBER 2024 10:36:22)

14.2 Main Deck ULD Compatibility

The following ULD type loading restrictions apply. The ULD type can be loaded on positions marked with a 'Y'. The ULD type cannot be loaded on positions marked with a 'N'.

		ULD Type																	
	Pos	AAA	AAC/ LAY	AAJ/ LAK	AAX	AMA	AMD	AMH	AMJ	AML	AMP	AMV	AMX	HMJ	PAG	PMC	PGA	PGE	PRA	PZA
1	AL/R	Y	Y	Y	Y	N	N	N	N	N	N	N	N	N	Y	Y1	N	N	N	N
	BL/R	Y	Y	Y	Y	N	N	Y	Y	Y	Y	Y	Y	Y	Y	Y	N	N	N	N
	CL/R	Y	Y	Y	Y	N	N	Y	Y	Y	Y	Y	Y	Y	Y	Y	N	N	N	N
	DL/R	Y	Y	Y	Y	N	N	Y	Y	Y	Y	Y	Y	Y	Y	Y	N	N	N	N
	EL/R	Y	Y	Y	Y	N	N	Y	Y	Y	Y	Y	Y	Y	Y	Y	N	N	N	N
	FL/R	Y	Y	Y	Y	N	N	Y	Y	Y	Y	Y	Y	Y	Y	Y	N	N	N	N
	GL/R	Y	Y	Y	Y	N	N	Y	Y	Y	Y	Y	Y	Y	Y	Y	N	N	N	N
	HL/R	Y	Y	Y	Y	N	N	Y	Y	Y	Y	Y	Y	Y	Y	Y	N	N	N	N
	JL/R	Y	Y	Y	Y	N	N	Y	Y	Y	Y	Y	Y	Y	Y	Y	N	N	N	N
	KL/R	Y	Y	Y	Y	N	N	Y	Y	Y	Y	Y	Y	Y	Y	Y	N	N	N	N
	LL/R	Y	Y	Y	Y	N	N	Y	Y	Y	Y	Y	Y	Y	Y	Y	N	N	N	N
	ML/R	Y	Y	Y	Y	N	N	Y	Y	Y	Y	Y	Y	Y	Y	Y	N	N	N	N
	PL/R	Y	Y	Y	Y	N	N	Y	N	Y	Y	Y	N	Y	Y	Y	N	N	N	N
	R	Y	Y	Y	Y	Y	N	Y	Y2	N	Y	Y	N	N	Y3	Y3	N	N	N	N
2	A	N	N	N	N	Y	N	N	Y	N	Y	N	N	Y	N	Y	N	N	N	N
	B	N	N	N	N	Y	Y	Y	Y	Y	Y	N	Y	Y	N	Y	N	N	N	N
	C	N	N	N	N	Y	Y	Y	Y	Y	Y	N	Y	Y	N	Y	N	N	N	N
	D	N	N	N	N	Y	Y	Y	Y	Y	Y	N	Y	Y	N	Y	N	N	N	N
	E	N	N	N	N	Y	Y	Y	Y	Y	Y	N	Y	Y	N	Y	N	N	N	N
	F	N	N	N	N	Y	Y	Y	Y	Y	Y	N	Y	Y	N	Y	N	N	N	N
	G	N	N	N	N	Y	Y	Y	Y	Y	Y	N	Y	Y	N	Y	N	N	N	N
	H	N	N	N	N	Y	Y	Y	Y	Y	Y	N	Y	Y	N	Y	N	N	N	N
	J	N	N	N	N	Y	Y	Y	Y	Y	Y	N	Y	Y	N	Y	N	N	N	N
	K	N	N	N	N	Y	Y	Y	Y	Y	Y	N	Y	Y	N	Y	N	N	N	N
	L	N	N	N	N	Y	Y	Y	Y	Y	Y	N	Y	Y	N	Y	N	N	N	N
	M	N	N	N	N	Y	Y	Y	Y	Y	Y	N	Y	Y	N	Y	N	N	N	N
	P	N	N	N	N	Y	N	N	Y	N	Y	N	N	Y	N	Y	N	N	N	N

Y1: PMC with aisle only.

Y2: AMJ loadable with net facing forward.

Y3: Pallets built to A contour not allowed.

UNCONTROLLED DOCUMENT (20 DECEMBER 2024 10:36:22)

The following ULD type loading restrictions apply. The ULD type can be loaded on positions marked with a 'Y'. The ULD type cannot be loaded on positions marked with a 'N'.

		ULD Type																	
	Pos	AAA	AAC/ LAY	AAJ/ LAK	AAX	AMA	AMD	AMH	AMJ	AML	AMP	AMV	AMX	HMJ	PAG	PMC	PGA	PGE	PRA	PZA
3a	CDR/L	N	N	N	N	N	N	N	N	N	N	N	N	N	N	N	Y	Y	Y	Y
	EFR/L	N	N	N	N	N	N	N	N	N	N	N	N	N	N	N	Y	Y	Y	Y
	GHR/L	N	N	N	N	N	N	N	N	N	N	N	N	N	N	N	Y	Y	Y	Y
	JKR/L	N	N	N	N	N	N	N	N	N	N	N	N	N	N	N	Y	Y	Y	Y
	MPR	N	N	N	N	N	N	N	N	N	N	N	N	N	N	N	Y	Y	Y	Y
4	F	N	N	N	N	N	N	N	N	N	N	N	N	N	N	N	N	N	Y	Y
	L	N	N	N	N	N	N	N	N	N	N	N	N	N	N	N	N	N	Y	Y
	M	N	N	N	N	N	N	N	N	N	N	N	N	N	N	N	N	N	Y	Y
4a	F	N	N	N	N	N	N	N	N	N	N	N	N	N	N	N	N	N	Y	Y
	G	N	N	N	N	N	N	N	N	N	N	N	N	N	N	N	N	N	Y	Y
	H	N	N	N	N	N	N	N	N	N	N	N	N	N	N	N	N	N	Y	Y
	L	N	N	N	N	N	N	N	N	N	N	N	N	N	N	N	N	N	Y	Y
	M	N	N	N	N	N	N	N	N	N	N	N	N	N	N	N	N	N	Y	Y
5a	EF	N	N	N	N	N	N	N	N	N	N	N	N	N	N	N	Y	Y	Y	Y
	GH	N	N	N	N	N	N	N	N	N	N	N	N	N	N	N	Y	Y	Y	Y
	JK	N	N	N	N	N	N	N	N	N	N	N	N	N	N	N	Y	Y	Y	Y

20ft ULD Notes:

If a 20ft ULD is loaded on Position HJR (Config. 3b – same ULD compatibility as Config. 3a) it covers the pallet locks of adjacent position(s), either forward or aft, depending on the exact placement of the 20ft ULD. It is then not possible to load 125"/88" or 125"/96" ULDs on adjacent position(s) – either forward *or* aft**.**

Configuration 3b (same ULD compatibility as Config. 3a) incorporates positions DER to HJR and DEL to FGL. This configuration is not shown in SABLE.

If a 20ft ULD is loaded on Position DE (Config. 5b – same ULD compatibility as Config. 5a) it covers the pallet locks of adjacent twin-track positions, either forward or aft, depending on the exact placement of the 20ft ULD. It is then not possible to load 125"/88" or 125"/96" ULDs on the adjacent twin-track position – either forward *or* aft.

Configuration 5b incorporates positions DE to HJ. This configuration is not shown in SABLE.

UNCONTROLLED DOCUMENT (20 DECEMBER 2024 10:36:22)

14.3 Lower Deck Configurations

The loading combinations shown here are examples only. More combinations are possible. Full information covering possible loading combinations, and how they interact, can be found in the Sable system.

14.3.1 Forward Hold

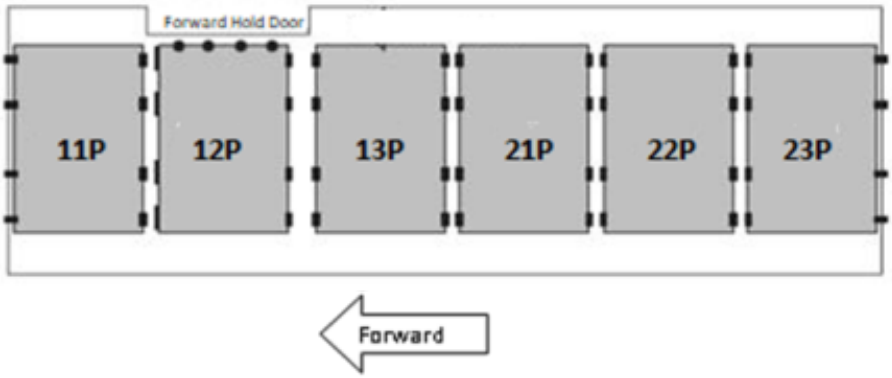

Configuration 1: 6 lateral 125”/96” or 125”/88” ULDs

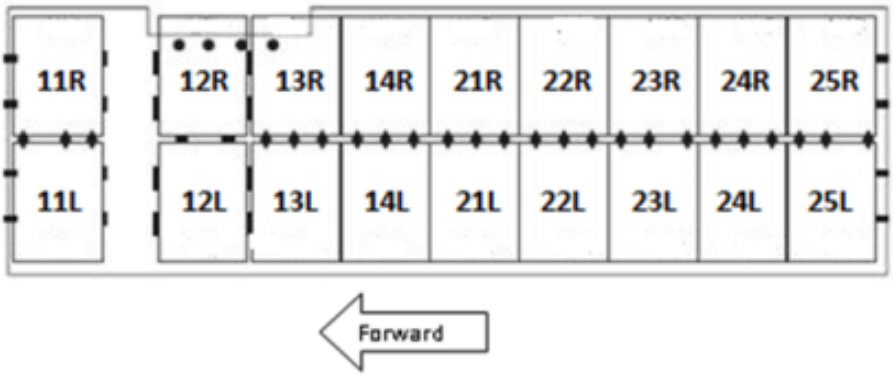

Configuration 2:9 Lateral 125”/60.4” or 18 of 61.5”/60.4” ULDs

UNCONTROLLED DOCUMENT
UNCONTROLLED DOCUMENT

UNCONTROLLED DOCUMENT (20 DECEMBER 2024 10:36:22)

Examples of Forward Hold loading combinations:

16 x 60.4 and 1 x 88/96:



6 x 60.4 and 4 x 88/96:

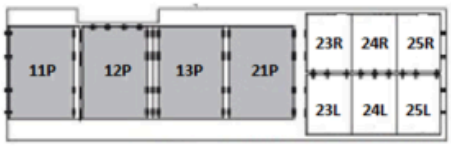

12 x 60.4 and 2 x 88/96:

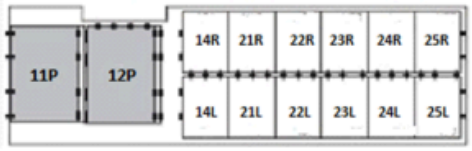

4 x 60.4 and 4 x 88/96:

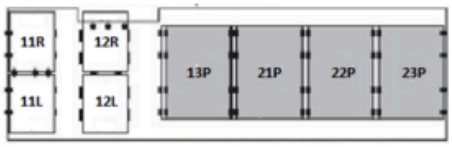

2 x 60.4 and 5 x 88/96:

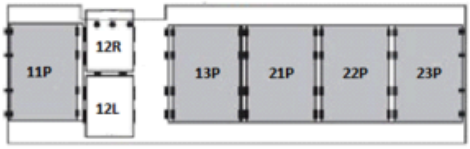

14.3.2 Aft Hold

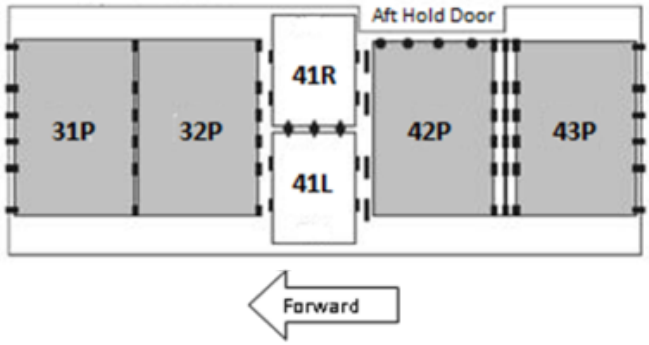

Configuration 1: 4 Lateral 125"/96" or 125"/88" ULDs and 1 125"/60.4" (ALP) ULD or 2 61.5"/60.4" (AKE) ULDs

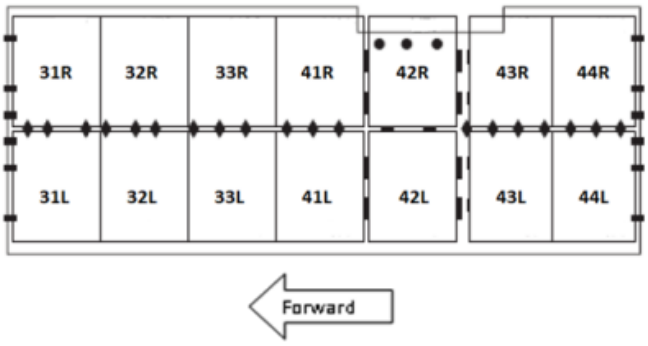

Configuration 2: 7 Lateral 125"/60.4" **or** 14 61.5"/60.4" ULDs

UNCONTROLLED DOCUMENT (20 DECEMBER 2024 10:36:22)

Examples of Aft Hold loading combinations:

2 x 60.4 and 2 x 88/96 and 2 x 88" * 125"

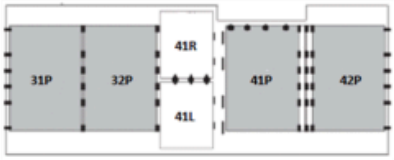

10 x 60.4 and 1 x 88/96:

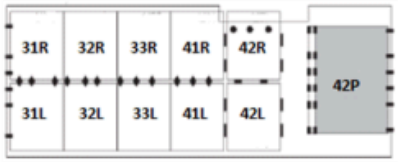

8x 60.4 and 2 x 88" * 125"

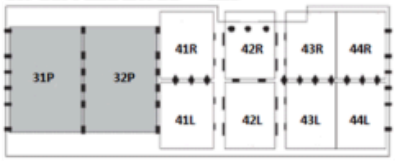

4 x 60.4 and 1 x 88/96 and 2 x 88" * 125"

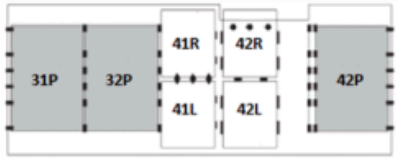

8 x 60.4 and 2 x 88/96

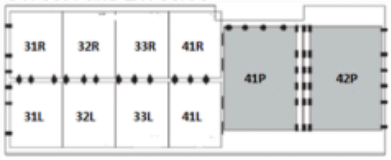

2 x 60.4 and 3 x 88/96
(Combination of 96" on 31P and 88" on 32P is **not** possible)

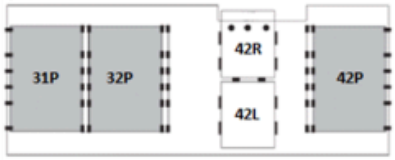

UNCONTROLLED DOCUMENT
UNCONTROLLED DOCUMENT

UNCONTROLLED DOCUMENT (20 DECEMBER 2024 10:36:22)

UNCONTROLLED DOCUMENT

14.4 Lower Deck ULD Compatibility

The following ULD type loading restrictions apply. The ULD type can be loaded on positions marked with a 'Y'. The ULD type cannot be loaded on positions marked with a 'N'.

		ULD Type											
	Pos	AAF	AAJ/ LAK	RAP	AMF	AMP	PAG	PMC	AKE	RKN	ALF	ALP	AVA
FWD 1	11P	Y	Y	Y	Y	Y	Y	Y	N	N	N	N	N
	12P	Y	Y	Y	Y	Y	Y	Y	N	N	N	N	N
	13P	Y	Y	Y	Y	Y	Y	Y	N	N	N	N	N
	21P	Y	Y	Y	Y	Y	Y	Y	N	N	N	N	N
	22P	Y	Y	Y	Y	Y	Y	Y	N	N	N	N	N
	23P	Y	Y	Y	Y	Y	Y	Y	N	N	N	N	N
FWD 2	11R/L	N	N	N	N	N	N	N	Y	Y	Y	Y	Y
	12R/L	N	N	N	N	N	N	N	Y	Y	Y	Y	Y
	13R/L	N	N	N	N	N	N	N	Y	Y	Y	Y	Y
	14R/L	N	N	N	N	N	N	N	Y	Y	Y	Y	Y
	21R/L	N	N	N	N	N	N	N	Y	Y	Y	Y	Y
	22R/L	N	N	N	N	N	N	N	Y	Y	Y	Y	Y
	23R/L	N	N	N	N	N	N	N	Y	Y	Y	Y	Y
	24R/L	N	N	N	N	N	N	N	Y	Y	Y	Y	Y
	25R/L	N	N	N	N	N	N	N	Y	Y	Y	Y	Y
AFT 1	31P	Y	Y	Y	Y	Y	Y	Y	N	N	N	N	N
	32P	Y	Y	Y	Y	Y	Y	Y	N	N	N	N	N
	42P	Y	Y	Y	Y	Y	Y	Y	N	N	N	N	N
	43P	Y	Y	Y	Y	Y	Y	Y	N	N	N	N	N
AFT 2	31R/L	N	N	N	N	N	N	N	Y	Y	Y	Y	Y
	32R/L	N	N	N	N	N	N	N	Y	Y	Y	Y	Y
	33R/L	N	N	N	N	N	N	N	Y	Y	Y	Y	Y
	41R/L	N	N	N	N	N	N	N	Y	Y	Y	Y	Y
	42R/L	N	N	N	N	N	N	N	Y	Y	Y	Y	Y
	43R/L	N	N	N	N	N	N	N	Y	Y	Y	Y	Y
	44R/L	N	N	N	N	N	N	N	Y	Y	Y	Y	Y

Forward hold Notes: 11P and 12P can be locked individually – the limitation that needs to be observed will only apply for LD3 combinations starting from 13L/R to 25L/R.

LD3 (AKE) and LD11 (ALP) type ULDs are generally stack- loaded and secured by partial load latches around positions 11 and 12.

Single loading of LD3 (AKE) type ULDs is allowed.

Aft Hold Notes: If loading **2 x LD3 (AKE) or 1 x LD11 (ALP) and 3 x 88"/96"-125" ULDs**, combination of 96" in Position 31P and 88" in 32P is not possible.

All **allowed** ULDs can be loaded in all positions. PLA / PLW / PKC are not permitted

UNCONTROLLED DOCUMENT (20 DECEMBER 2024 10:36:22)

UNCONTROLLED DOCUMENT

LD3 (AKE) and LD11 (ALP) type ULDs are generally stack- loaded and secured by partial load latches around positions 41 and 42.

Single loading of LD3 (AKE) type ULDs is allowed.

UNCONTROLLED DOCUMENT

UNCONTROLLED DOCUMENT

UNCONTROLLED DOCUMENT (20 DECEMBER 2024 10:36:22)

UNCONTROLLED DOCUMENT

15. Loading and Un-Loading

15.1 Cargo Loading System

Only fully trained and certified staff are allowed to operate the Cargo Loading System (CLS). The CLS is controlled by the:

- Master Control Panel (MCP)
- Outside Control Panel (OCP)
- Local Control Panel (LCP)
- PDU Retract Panel (PRP)
- Control Panel for 20ft ULDs

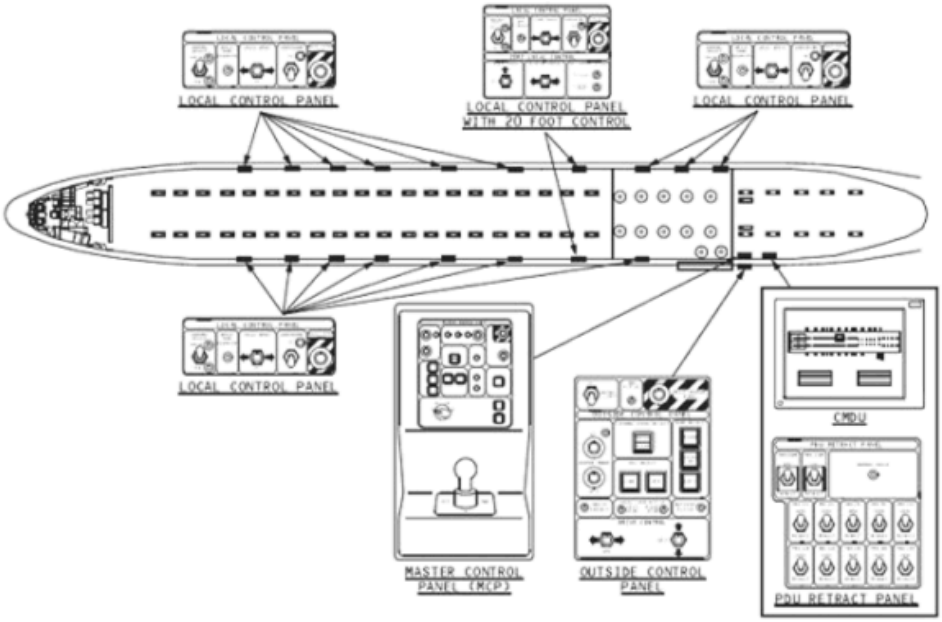

A minimum of 2 persons are required to operate the Main-deck CLS. It is recommended that 3 staff members are made available for the Main-deck, to maximise the efficiency of the un-loading and loading process.

UNCONTROLLED DOCUMENT

UNCONTROLLED DOCUMENT (20 DECEMBER 2024 10:36:22)

UNCONTROLLED DOCUMENT

15.2 Un-Loading Sequence

Step 1: Un-load the aft lower deck.

Step 2: Un-load the ULDs on the main deck in the following numbered sequence, and respect standard step un-loading method:

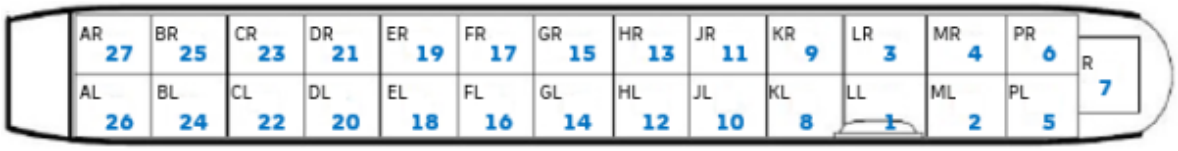

Step 3: Un-load the forward lower deck.

Note: Unloading both sides of the Main-deck simultaneously is the preferred option, but unloading each side separately is also allowed.

15.3 Loading Sequence

Step 1: Load the forward lower deck.

Step 2: Load the ULDs on the main deck in the following numbered sequence, and respect standard step loading method:

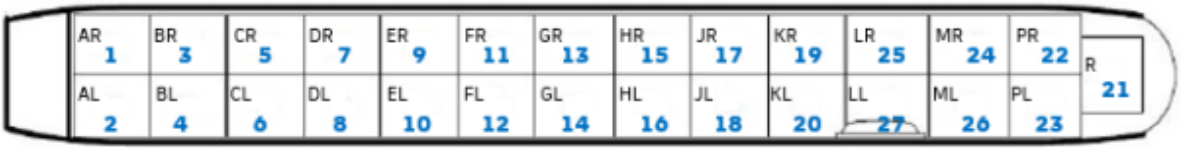

Step 3: Load the aft lower deck.

Note: Loading both sides of the Main-deck simultaneously is the preferred option, but loading each side separately is also allowed.

If loading both sides simultaneously, particular attention must be given to **ensure all centre-line and side restraints are properly engaged.**
Additional Precautions Make sure that two persons verify that all locking devices, securing the ULDs, are engaged and operative.

Both persons must sign the Load Plan.

UNCONTROLLED DOCUMENT (20 DECEMBER 2024 10:36:22)

UNCONTROLLED DOCUMENT

15.4 Loading Notes

15.4.1 Tail-Tipping

The B777 Freighter is a very stable aircraft, and it is possible to load and/or un-load more than one deck at the same time.

As a general rule, once either the FWD hold and/or Main-deck positions AL/AR thru CL/CR have been loaded with a **combined minimum of 10 tons**, loading may proceed with minimum risk of tail-tipping regardless of method used. Due care must be exercised if doing so, ensuring at all times that the actual loading and/or un-loading procedure employed does not result in a tail-tip condition.

15.4.2 CLS Operation

By loading and un-loading both sides of the Main-deck simultaneously, the Cargo Loading System will be utilised most efficiently, reducing turn-around times to the minimum possible. Side-by-side loading and un-loading is possible, but is considerably less efficient, and therefore more time consuming and requiring additional loading resources.

Whilst loading or un-loading the Main-Deck, the High Loader (K-Loader) must be indexed towards the aft of the Main-Deck Cargo Door. Care must be exercised positioning the loader, as incorrect positioning may have a detrimental effect on loading and un-loading efficiency, particularly when the load includes 16 and/or 20 feet ULDs.

A minimum of 2 persons are required to operate the CLS when loading 16 and 20 feet ULDs. It is not possible to rotate a 16 or 20 foot ULD in or out of the aircraft single handed.

All PDUs (Power Drive Units) are software controlled. The failure of any single PDU will not have a negative effect on the CLS' ability to load or unload freight. Should a single PDU fail, the power of adjacent PDUs is sufficient to overcome the breaking action of the failed unit.

The FCT (Freighter Common Turntable) PDUs mounted around the door area are also software controlled, and in the event of a failure will drop below the cargo-deck waterline, allowing for continued and uninterrupted loading and un-loading.

In the unlikely event of total power failure, loading or un-loading is not possible until power has been restored to the CLS.

UNCONTROLLED DOCUMENT

UNCONTROLLED DOCUMENT

UNCONTROLLED DOCUMENT (20 DECEMBER 2024 10:36:22)

UNCONTROLLED DOCUMENT

15.4.3 CLS Troubleshooting

When the moveable parts of the CLS stop working a reset becomes necessary to allow the system to operate within normal parameters again.

Aircraft handling personnel have the following options to fix the problem with or without the assistance from Maintenance:

Press the MCP/OCP Control Panel Select Button for seven seconds until the button stops flashing.

Step 1 - Stop loading and change the GPU/Underground Electrical Pit for a different GPU. Try loading again. If still not operable, try Step 2.

Step 2 – Ask Maintenance to switch on the APU and arrange for the discontinuation of GPU usage. Try loading again. If still not operable, try Step 3.

Step 3 - Perform alternative reset by closing, locking and latching the Main Cargo Door. Reopen and try loading again. If still not operable, try Step 4.

Caution: position high loader away from the aircraft before closing the door.

Step 4 – Ask Maintenance to reset the CLS's circuit breakers.

Please send a CLS report indicating which method was used to fix the CLS system.

Under no circumstances may aircraft handling personnel touch or reset any circuit breakers. This is a Maintenance function only.

15.4.4 Service Point Access

All access to outside service points (GPU, ASU, ACU etc) must be done using a ladder due to the height of the fuselage off the ground. Lower-deck doors of containerised compartments must be opened using technical / maintenance steps to reach the cargo doors. In cases where technical / maintenance steps are not available, it is permitted to use belt-loaders with raised safety rails as long as they do not cause an obstacle. The use of a ULD loader / hi-loader to open / close lower deck doors is prohibited.

UNCONTROLLED DOCUMENT

UNCONTROLLED DOCUMENT

UNCONTROLLED DOCUMENT (20 DECEMBER 2024 10:36:22)

UNCONTROLLED DOCUMENT

15.4.5 Alternative Access to Main-Deck Loader

If the normal access path is blocked, the MDL may be approached driving under the aircraft tail with empty dollies only. Particular care shall be given to prevent impact between tractor / dolly train and the aircraft fuselage. To ensure a safe distance is maintained, a guide-man shall be used at all times.



Note: Parallel dolly-train un-loading is not allowed for this procedure

15.4.6 Lateral guides on LL/LR Position

To avoid causing damage to the door frame, it is imperative the lateral guides aft of position LL/LR are always used during loading and un-loading of the aircraft. The only exception to this rule is when loading / un-loading16ft and 20ft pallets, in which case the lateral guides shall be lowered to allow free rotation of the pallets.

UNCONTROLLED DOCUMENT

UNCONTROLLED DOCUMENT

UNCONTROLLED DOCUMENT (20 DECEMBER 2024 10:36:22)

UNCONTROLLED DOCUMENT

15.4.7 Intermediate Bulk Containers (IBCs)

Following general rules apply to IBCs when carrying liquids:

- **Special load code/remark/flagging 'IBC' shall be used. This is needed for load control purposes.**
- IBCs must be built of metal or hard plastic enclosed in a metal frame.
- IBCs are only allowed as a pallet load.
- Top loading is NOT permitted.
- The floor of the pallet must be covered with supporting platforms.
- Distribute IBCs evenly on the pallet.
- Volume max. 1000 liter per IBC.
- Use absorption sheets and plastic foil according to procedures.
- The fill lever per IBC must be a minimum of 80% and a maximum of 95%

Note that Dangerous Goods as liquids are **not** allowed on IBCs.

ULDs with IBCs are only allowed on the following positions:

- Main Deck: E/ F/ G/ H/ J.
- Lower Deck: 22P/ 23P/ 31P/ 32P.

- If IBCs are loaded the Max. Position Weight must be reduced by 20%.
- Max. 5 IBCs allowed per pallet.
- Max. Allowed Total Gross Weight of all pallets loaded with IBCs on the aircraft is 40 tons.
- All position locks must be serviceable.
- For ULDs with mixed load, the IBC restriction applies

UNCONTROLLED DOCUMENT

UNCONTROLLED DOCUMENT

UNCONTROLLED DOCUMENT (20 DECEMBER 2024 10:36:22)

16. Rigid, Oversized and Special Loads

For guidance on the handling of special loads, please refer to the Special Loads Regional Contact Instructions outlined in Chapter 6 **6.12.22.3 - Determining Loadability of Special Loads**. Where direct operator approval is required, the Regional Airside Team will liaise with Global Airside as needed.

16.1 Floating / Heavy Pallets

ULDs which are heavier than the standard allowed maximum gross weight may not be loaded. Special permission from Aerologic is possible for 16/20ft centre positions up to 21070 kg. Any shipments on 16ft or 20ft centre positions which are heavier than the standard allowed maximum gross weight will need to be strapped to the aircraft structure. Additional ground time will be required at the flight's origin and destination to accomplish this.

Permission must be sought from your Special Loads Regional contact before accepting any ULDs which require loading on a floating position, or for any pieces with a weight of more than 9.999kg.

Permission, including a special loading instruction, will be granted only after all details concerning the load and the loading have been checked and clarified.

The following details are required for all pieces weighing more than 9.999kg:

- Exact dimensions
- Detailed description
    - For un-packed shipments i.e. generators, trucks with body, drilling equipment, boats, turbine shafts, tubes
    - For packed shipments i.e. closed wooden boxes, wooden crates, Sea-container, pieces covered with closed plastic tarpaulin or aluminum foil
- Information if stackable and/or turn-able
- Description about actual or planned surface/sub-construction
    - E.g. Wooden beams length/lateral, wooden platform, steel beams length/lateral, steel frame
- Information about available lashing points; best to send a sketch or blueprint with marked lashing points
- Information about centre of gravity
- Steel sheets, steel plates and similar solid constructions
    - These goods require a solid packaging (e.g. solid crate)
- A blueprint/sketch/photo is always mandatory to perform a load-ability check
- All pieces except those of solid construction must be delivered un-crated

16.2 Heavy Pieces (HEA)

Loading of HEA (pieces exceeding a weight of 150kg) is not allowed in compartment 5.

UNCONTROLLED DOCUMENT
UNCONTROLLED DOCUMENT

UNCONTROLLED DOCUMENT (20 DECEMBER 2024 10:36:22)

16.3 Crushable Cargo Requirements

To protect the cargo barrier from potential damage, a number of Crushable Cargo ULDs suitable for protecting the barrier wall against unrestrained Rigid Cargo must be loaded in between the cargo barrier and the first Rigid / Piercing ULD. The number of Crushable Cargo ULDs suitable for protecting the barrier wall against unrestrained Rigid Cargo required depends on the total Main-deck load, as per the following charts.

When the total MD weight is 82000 kg or less, the Crushable Cargo ULDs must meet the standard requirements of Crushable Cargo ULDs suitable for protecting the barrier wall against unrestrained Rigid Cargo.

When the total MD weight is **more than 82000 kg**, the Crushable Cargo ULDs must meet the standard requirements of Crushable Cargo ULDs suitable for protecting the barrier wall against unrestrained Rigid Cargo **AND must be at least 90% volumetrically full**.

Two Loading Lanes

Total MD weight	Number of Crushable Cargo ULDs suitable for protecting the barrier wall against unrestrained Rigid Cargo between the rigid cargo barrier and the first rigid/piercing ULD
Up to 27.000 kg	None required
27.001 to 82.000 kg	2 in each lane
More than 82.000 kg	3 in each lane

Centreline Positions

Total MD weight	Number of Crushable Cargo ULDs suitable for protecting the barrier wall against unrestrained Rigid Cargo between the rigid cargo barrier and the first rigid/piercing ULD
Up to 20.000 kg	None required
20.000 to 82.000 kg	3 in each lane
More than 82.000 kg	4 in each lane

16.3.1 Empty ULDs

Empty ULDs and gaps are allowed anywhere within or in front of rigid or piercing cargo. However, it cannot be classified as non-rigid (compressible) cargo.

16.3.2 Rigid / Non-Rigid Checklist

To ensure and certify these requirements have been fulfilled, a ‘Rigid/Non-Rigid Cargo Checklist’ shall be completed for every flight. The checklist shall be filed in the flight folder but does not have to be presented to the flight crew.

A copy of the Rigid/non-Rigid Cargo Checklist is available via Station Net.

16.3.3 Flagging

Rigid and piercing cargo shall be flagged as follows:

DHL Flagging: **RGD**, e.g. LEJHUBCOYWPX**(RGD)**ORGCVG.

LCAG Flagging: **ICR**, e.g. LHC**(ICR)**

Note: LCAG may also write the code in full, e.g. RIGID/PIERCING

16.4 Piercing Cargo

Piercing cargo may not be loaded on the first and last loaded position on the aircraft.

UNCONTROLLED DOCUMENT (20 DECEMBER 2024 10:36:22)

16.5 Aircraft Engines

The following aircraft engines are loadable on the B777 Freighter.

Note: All engines shall be loaded in flight direction.

Engine Type	Loaded on	Allowed Loading Positions	Loading direction	Weight distribution for load control	
				Forward position	Aft position
BR710 BR715	96” Pallet	Main deck	Not important	100% on one position	
CF6-50	20ft Pallet	EF, GH, JK (Centre)	Fan against flight direction	40%	60%
			Fan in flight direction	60%	40%
CF6-80C2	16ft Pallet	CDR – JKR CDL – GHL	Fan against flight direction	45%	55%
			Fan in flight direction	55%	45%
CFM56-2	96” Pallet	Main deck	Not important	100% on one position	
CFM56-3 CFM56-5 CFM56-7 V2500	16ft or 20ft Pallet	CDR – JKR CDL – GHL	Fan against flight direction	40%	60%
			Fan in flight direction	60%	40%
	As exception 96” pallet	Main deck Check height and observe overlap	Fan against flight direction	100% on one position	
GE90	20ft Pallet	CDR – JKR CDL – GHL EF, GH, JK (Centre)	Fan against flight direction	40%	60%
GE90-110/115B	20ft Pallet	EF, GH, JK (Centre)	Not important. Fan must be disassembled	50%	50%
JT3 JT8 complete	96” Pallet	Main deck	Not important	100% on one position	
JT3 JT8 Partially assembled (without thrust reverser)	96” Pallet	Main deck	Not important	100% on one position	
		Compartment 1, 2, 3, 4.	Load through the hold door with the exhaust (aft end) of the engine first	100% on one position	
JT9 PW4000	20ft Pallet	CDR – JKR CDL – GHL EF, GH, JK (Centre)	Not important	50%	50%
RB211	20ft Pallet	EF, GH, JK (Centre)	Fan against flight direction	40%	60%
Trent 700	20ft Pallet	EF, GH, JK (Centre)	Fan against flight direction	40%	60%
PW2000	16ft or 20ft Pallet	EF, GH, JK (Centre)	-	-	-

UNCONTROLLED DOCUMENT
UNCONTROLLED DOCUMENT

UNCONTROLLED DOCUMENT (20 DECEMBER 2024 10:36:22)

UNCONTROLLED DOCUMENT

16.5.1 Aircraft Engine & Gas Turbine Shipper's Declaration Form

Prior to uplift of any aircraft engine or gas turbine, the shipper must complete and sign the *Aerologic Shipper's Declaration for Aircraft Engines and Gas Turbines* to certify that:

- The shipment has been suitably mounted and secured on a shipping stand and cradle for air transport.
- The shipping stand and cradle are free of damage.

A scanned copy of the signed Shipper's Declaration for Aircraft Engines and Gas Turbines shall be e-mailed to ground.operations@aerologic.aero

The original signed Shipper's Declaration for Aircraft Engines and Gas Turbines shall be attached to the ULD Tag so that it can travel with the shipment. The Loading Supervisor shall confirm that the Shipper's Declaration for Aircraft Engines and Gas Turbines is attached to the ULD Tag prior to loading the shipment.

The *Aerologic Shipper's Declaration For Aircraft Engines and Gas Turbines* can be found in and downloaded from Q-Pulse / Web Manuals.

16.6 Live Animals

16.6.1 Horses

Max. Number of Horses per Aircraft	24 as standard. Up to 36 with prior approval, for approval contact your Special Loads Regional contact.
Max. Number of Horses per Box	3
Max. number of Horses per Groom	9
Approved Horse Transport ULDs	DHL or IATA approved ULDs, i.e. HMJ or equivalent
Approved Loading Configurations	125"/96" Twin-track (Config 1) or 125"/96" centre-line (Config 2)

Notes: Horses shall be loaded with their heads facing the direction of travel (forwards).

Grooms Exception: Polo Horses, Ponies etc. will be subject to further clarification from AeroLogic and the customer. For any exceptions the **prior** approval from AeroLogic: occ@aerologic.aero or ground.operations@aerologic.aero is mandatory.

UNCONTROLLED DOCUMENT

UNCONTROLLED DOCUMENT

UNCONTROLLED DOCUMENT (20 DECEMBER 2024 10:36:22)

UNCONTROLLED DOCUMENT

16.6.2 Other Live Animals

The following table provides a list of commonly transported animals. If there is a requirement to transport animals not listed below, contact your Special Loads Regional contact.

<table>
<tr><th></th><th>Main-Deck**</th><th>Compt. 1**</th><th>Compt. 2**</th><th>Compt. 3**</th><th>Compt. 4**</th><th>Compt. 5</th></tr>
<tr><td>Pigs***</td><td colspan="5">No</td><td></td></tr>
<tr><td>Horses*</td><td>Max 36 horses</td><td colspan="4">No</td><td rowspan="14">No AVI allowed in CPT 5</td></tr>
<tr><td>Day-old chickens</td><td>Max 6 pallets</td><td colspan="4">No</td></tr>
<tr><td>Cattle*</td><td>Max 5 pallets</td><td rowspan="13">Yes</td><td rowspan="13">Yes</td><td rowspan="13">Yes</td><td rowspan="13">Yes</td></tr>
<tr><td>Sheep or Goats*</td><td>Max 5 pallets</td></tr>
<tr><td>Monkeys</td><td rowspan="12">Yes</td></tr>
<tr><td>Dogs or Cats</td></tr>
<tr><td>Small mammals or Birds</td></tr>
<tr><td>Tropical Fish</td></tr>
<tr><td>Reptiles or Amphibians</td></tr>
<tr><td>Eels</td></tr>
<tr><td>Crustaceans or Molluscs</td></tr>
<tr><td>Bees</td></tr>
<tr><td>Hatching eggs</td></tr>
</table>

* Observe the additional regulations shown below.
** Loading of animals is not allowed in the door position LL, 21P and 41P.
*** For Pigs, contact Aerologic at groundoperations@aerologic.aero for approval.

Horses, Pigs, cattle, sheep and goats

- During the loading process the hold must be constantly ventilated
- Do not load smell-sensitive cargo into the same hold.
- Horses shall be loaded with their heads facing the direction of flight (forward)

Note: In order to comply with the approval of the appropriate veterinary authority, AeroLogic must be informed about live animal transportation at least 3 days prior to the planned flight. The request must be sent to animaltransport@aerologic.aero
The following information is required as a minimum:

- Animal species and amount
- Flight number, routing, date of flight
- Number of grooms and number of grooms that have access to the main-deck simultaneously (see AeroLogic MOP 3.4.2 for rules and restrictions).

UNCONTROLLED DOCUMENT (20 DECEMBER 2024 10:36:22)

UNCONTROLLED DOCUMENT

16.7 Electric and Hybrid Cars

Electric and Hybrid cars assigned to UN3166/UN3171 shall only be loaded on Aerologic aircraft if protected by Fire Containment Covers.

UNCONTROLLED DOCUMENT

UNCONTROLLED DOCUMENT

UNCONTROLLED DOCUMENT (20 DECEMBER 2024 10:36:22)

17. Restricted Commodities Loading

17.1 Radioactive (RRY), Magnetised (MAG) and Cargo Aircraft Only (CAO)

The following Dangerous Good type loading restrictions apply. The Dangerous Good type can be loaded on positions marked with a 'Y'. The Dangerous Good type cannot be loaded on positions marked with a 'N'.

	Position															
DG Type	AL /R	BL /R	CL /R	DL /R	EL /R	FL /R	GL /R	HL /R	JL /R	KL /R	LL /R	ML /R	PL /R	R	FWD LD	AFT LD
MAG	N	N	N	N	N	Y1	Y1	Y	Y	Y	Y	Y	Y	Y	N	Y
CAO	Y	Y	Y	Y	Y	Y	Y	Y	Y	Y	Y	Y	Y	N	Y	Y
RRY (max. 100 TI combined)	N	N	N	Y	Y	Y	Y	Y	Y	Y	Y	Y	Y	Y	N	Y
RRY (max. 150 TI combined)	N	N	N	N	N	Y	Y	Y	Y	Y	Y	Y	Y	Y	N	Y
RRY (max. 200 TI combined)	N	N	N	N	N	N	N	Y	Y	Y	Y	Y	Y	Y	N	Y

Y1: FL/FR and behind for twin-track. H and behind for single-track.

Note: Cargo Aircraft Only (CAO) can be loaded on any Main Deck position AL/R to PL/R provided they are loaded accessible. Accessible means that:

- The CAO is loaded on a pallet
- Positions AL/AR are loaded with 88" ULDs or 96" pallets with 25cm (10") aisle

The following load incompatibilities between AVI, HEG, LHO and FIL in the lower holds and RRY on the main deck apply:

If this special load …	**… is loaded into lower-deck compartment …**	**… then max TI and allowed main-deck positions are …**		
		Max. 50.0 TI together on positions	Max. 100.0 TI together on positions	Max. 200.0 TI together on positions
AVI, HEG, LHO	**1**	F-R	F-R	H-R
	2	H-R	J-R	K-R
	3	D-G and R	D-F	**Not allowed**
	4	D-J	D-J	H
FIL	**1**	G-R	H-R	L-R
	2	J-R	L-R	R
	3	D-F	D	**Not allowed**
	4	D-H	D-G	**Not allowed**

UNCONTROLLED DOCUMENT (20 DECEMBER 2024 10:36:22)

The following load incompatibilities between RRY in the lower holds and AVI, HEG, LHO, FIL in the main deck apply:

If this RRY …	… is loaded into lower-deck compartment …	… then the following main-deck positions are allowed for …	
		AVI, HEG, LHO	FIL
Max 50.0 TI	3	A-G	A-F
	4	A-J	A-H
Max 100.0 TI	3	A-F	A-D
	4	A-J	A-G
Max 150.0 TI	3	A-E	A
	4	A-H	A-E

17.2 Dry Ice

Refer to Global Supplementary Operational Document **Dry Ice Consolidation table** for the current Dry Ice limits.

If more than 4500 Kg of Dry Ice is loaded in the entire aircraft, ULDs with Dry Ice shall not be loaded on positions: A / P / R / 11P / 11R / 42P / 43LR / 44LR.

If more than 5700 Kg of Dry Ice is expected to be loaded on an Aerologic flight, Aerologic OCC must be informed by Load Control at STD -180. See Operational Notification “Aerologic Large Dry Ice Shipment Alert” for more details.

Dry Ice (ICE) and Live Animals (AVI)

The following compartment limits apply for Dry Ice (ICE) when Live Animals (AVI) are loaded on board:

Main Deck (Kg)	FWD Hold (Kg)	AFT Hold (Kg)
1300	300	300

If more than 4500 Kg of Dry Ice is loaded in the Main Deck, no AVI (except airtight packed animals) are loadable in the Lower Deck.

If AVI is loaded in the Main Deck, the compartment limits for Dry Ice (ICE) in the FWD and AFT Holds are not affected.

17.3 Polymeric Beads (RSB)

Polymeric beads are semi-processed products used to manufacture polymeric articles. When impregnated with flammable gas or liquid as a blowing agent they may emit small quantities of flammable gas, which can lead to the material expanding in size.

A total of not more than 100kg (220lbs) net weight of expandable polymeric beads or granules or plastic moulding materials, referenced to Packing Instruction 957, may be carried in any inaccessible hold on an aircraft or in each inaccessible ULD on the Main Deck.

17.4 Additional Restrictions

Due to the lack of tie-down attachment points, **it is not allowed to load Restricted Commodities into Compartment 5** on flights operated for DHL**.**

UNCONTROLLED DOCUMENT (20 DECEMBER 2024 10:36:22)

UNCONTROLLED DOCUMENT

17.5 Lithium Batteries

Please see the Global Supplementary Operational Document **Lithium Battery Loadability Consolidation Table** for the current UN3480 Section IA/IB (RBI), UN3090 Section IA/IB (RBM), UN3481 Section I (RLI), UN3091 Section I (RLM) load ability limits.

17.5.1 Additional Separation Requirements

Do not load Lithium batteries in section I (RLM/RLI), section IA and IB (RBM/RBI) together with classes 1.3, 1.4, 2.1, 3, 4.1 and 5.1 in the same ULD. When loaded in separate ULDs:

- do not load the ULDs next to each other
- minimum distance: one loading position or 1,5

Please refer to Section 0.5 of the Aerologic DGR GOM for any operator specific Additional Separation Requirements.

17.5.2 Aerologic Lithium Battery Transportation Policy

All AeroLogic aircraft consists of three (3) holds – main deck, forward lower deck (compartments 1 and 2//Class C) and aft lower deck (compartments 3, 4 and 5//Class C).

We divide lithium batteries, transported according to Packing Instructions (PI) 965-970 into two sections – those identified as Sections I (RLM/RLI), IA and IB (RBM/RBI) or as Section II (ELM/ELI).

Use only Class C cargo compartments (lower forward and aft decks, but excluding compartment 5 due to insufficient lashing points), when loading **Sections I, IA and IB** (RBM/RBI/RLM/RLI) on AeroLogic operated aircraft

NOTOC: **Yes**

As long as shipments comply with the Regulations, there is no restriction on Section II classified material and shipments can be loaded in both main and lower deck, with the exception of compartment 5.

NOTOC: **No**

Transporting Batteries under Special Provision A88 and A99

AeroLogic will fly pre-production prototypes of lithium batteries or cells under Special Provision A88, when transported for testing or low production runs (annual production runs consisting of no more than 100 lithium cells and batteries). Only shipments tested according to the UN Manual of Tests and Criteria, Part III, sub-section 38.3, paragraph 38.3.5 will be considered for transport on AeroLogic aircraft, if approved by the appropriate authority of the State of origin and the requirements in Packing Instruction 910 of the Supplement to the Technical Instructions are met. The test summary must be made available at the time of the request.

Shipments transported under Special Provision A99 will be accepted as long as the appropriate authority of the State of origin authorized it. The test summary, according to the UN Manual of Tests and Criteria, Part III, sub-section 38.3, paragraph 38.3.5 must be made available at the time of the request.

UNCONTROLLED DOCUMENT

UNCONTROLLED DOCUMENT

UNCONTROLLED DOCUMENT (20 DECEMBER 2024 10:36:22)

UNCONTROLLED DOCUMENT

AeroLogic restricts the loading of A88 and A99 shipments to Class C compartments.

- A88 shipments will be accepted in combination with a Fire Containment Cover (FCC) or a Fire Containments Bag (FCB).
- The maximum loading height for a shipment is 160cm.
- A combination loading of A88/A99 with classes 1, 2.1, 3, 4.1 and 5.1 in the same compartment is not allowed regardless of the type of ULD used. When loaded in separate ULDs do not load the ULDs next to each other, minimum distance: one loading position or 1,5 m
- Loading in compartment 5 is not allowed due to a lack of sufficient lashing points (including Section II).
- Per lower deck compartment maximum one (1) piece (maximum four (4) pieces per flight) of A88/A99 shipments
- When more than one A88/A99 loaded ULD offered for transport, load with one ULD position distance to the other ULD containing the A88/A99 piece, even when loaded in two different compartments.

Important notice: AeroLogic in general do not transport batteries offered for transport under IATA DG Special Provisions A88/A99:

- Request from AeroLogic the transportation of the batteries.
- AeroLogic must approve the shipment of batteries to their final destination prior to transport.
- The approval process requires five (5) working days to process.
- Once approved, the approval is only valid for the shipment for one single transport event from origin to destination.

Please contact dangerousgoods@aerologic.aero to obtain an approval.

Documentation:

Provide the Pilot-in-Command with the following documents:

- The NOTOC entry must state, “Lithium Ion Batteries transported under Special Provision A88/A99” under proper shipping name to identify such units. Copies of authorizations granted by the CAAs (e.g. 1 x LBA authorization granted to AeroLogic, 1 x CAA authorization granted to the shipper) must be attached to the NOTOC.

The crew may reject the transport of the shipment if the documents are not available by standard departure time or any other requirement was not fulfilled.

17.6 Dealing With Emergency Situations Involving Dangerous Goods

Every incident with dangerous goods must be reported and handled as per local station emergency plan. Additionally inform the AeroLogic OCC by phone (+49 34204 443 222).

Furthermore, the handling agent is obliged to file a Dangerous Goods Occurrence Report (DGOR) in the AeroLogic InfoBox without delay (latest within 24hrs after the event occurred).

An operator must report dangerous goods accidents or incidents to the appropriate authorities of the State of the operator and the State in which the accident or incident occurred, in accordance with the reporting requirements of these appropriate authorities.

UNCONTROLLED DOCUMENT (20 DECEMBER 2024 10:36:22)

UNCONTROLLED DOCUMENT

18. Messaging and Reporting

18.1 Messaging

Follow special instructions covering JV flights, ensuring that all relevant data is captured and transmitted.

18.2 Reporting

StationNet

The AeroLogic StationNet system must be used to report irregularities such as delays, ground handling damage, CLS irregularities and Restricted Commodities incidents and accidents. StationNet can be found on the following website:

https://be.aerologic.aero/stationnet

All 3S stations shall have access to StationNet.

Each station has been assigned as master user who is reasonable for the management of the personalised sign-ins locally. For further support contact

ground.operations@aerologic.aero

UNCONTROLLED DOCUMENT

UNCONTROLLED DOCUMENT

UNCONTROLLED DOCUMENT (20 DECEMBER 2024 10:36:22)

UNCONTROLLED DOCUMENT

19. Load Control Data

19.1 Standard Mass Additions

19.1.1 Additional Crew Members (ACM)

Maximum Number of ACMs:	8
Mass of ACM:	100 kg (including one item of luggage to be loaded in compartment 5)

19.1.2 Fly Away Kit (FAK) and Ballast

An FAK is not carried as standard on this aircraft.

Ballast is not carried as standard on this aircraft.

19.2 Minimum Fuel and Standard Taxi Fuel

Minimum Fuel:	Not Applicable
Standard Taxi Fuel:	600 kg (Subject to revision)

19.3 LMC Restrictions

Maximum Fuel LMC:	Not allowed
Maximum Payload LMC:	+/- 1500 kg

UNCONTROLLED DOCUMENT

UNCONTROLLED DOCUMENT

UNCONTROLLED DOCUMENT (20 DECEMBER 2024 10:36:22)

UNCONTROLLED DOCUMENT

20. Maximum Package Dimensions

20.1 Main Cargo Door (in.)

MAIN DECK COMPARTMENT ALLOWABLE PACKAGE SIZES - SIDE CARGO DOOR														
HEIGHT IN.	WIDTH IN.													
	10	20	30	40	50	60	70	80	90	100	110	120	130	140
	LENGTH IN.													
120	319	286	260	239	220	205	191	173	149	100	100	100	100	100
118	335	300	271	249	229	212	199	182	161	131	106	106	106	106
116	353	314	284	259	238	221	206	191	171	145	111	111	111	111
114	388	330	296	270	248	229	214	199	181	157	125	117	117	117
112	393	346	310	281	257	238	221	207	189	168	140	123	123	123
110	415	364	325	293	268	247	229	214	198	177	152	129	129	129
108	439	383	340	306	279	256	237	221	206	186	162	135	135	135
106	456	408	352	316	288	265	246	229	213	195	172	143	140	140
104	484	376	369	330	300	275	254	236	221	203	181	153	146	146
102	513	440	386	345	312	285	263	242	228	211	189	163	152	152
100	561	474	412	364	327	297	271	252	235	218	198	172	158	158
98	580	490	424	375	337	306	281	260	242	225	205	180	163	163
0-85.5	839	666	553	474	415	370	333	304	281	259	241	219	192	192

Note: Maximum length for a Main-deck piece is 493 inches

UNCONTROLLED DOCUMENT

UNCONTROLLED DOCUMENT

UNCONTROLLED DOCUMENT (20 DECEMBER 2024 10:36:22)

UNCONTROLLED DOCUMENT

UNCONTROLLED DOCUMENT

20.2 Main Cargo Door (cm.)

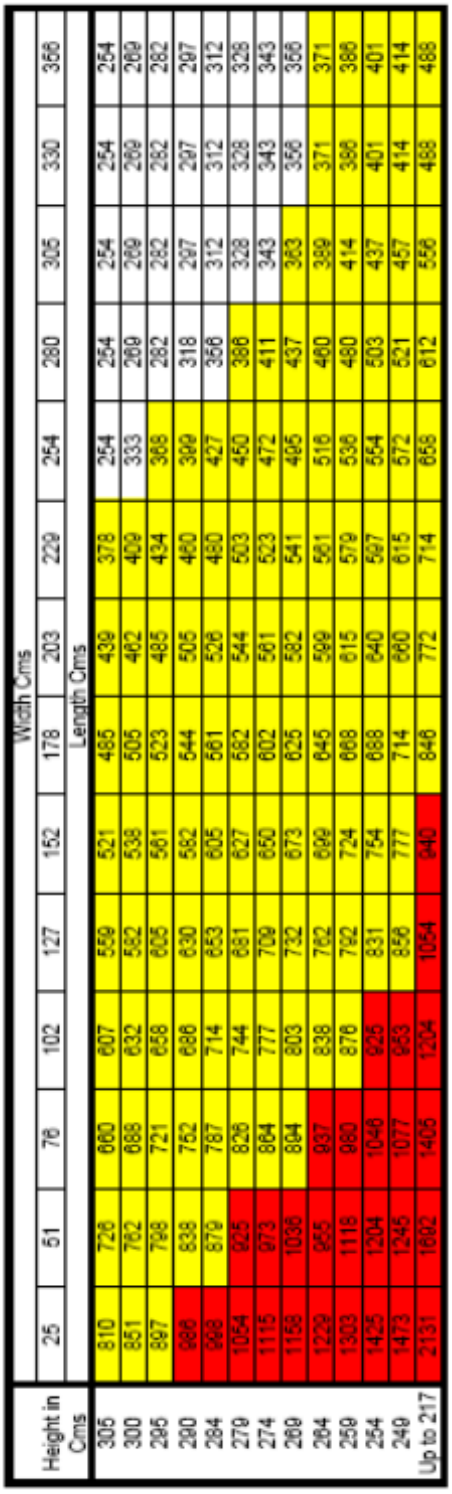

Height in Cms	Width Cms: 25	51	76	102	127	152	178	203	229	254	280	305	330	356
	Length Cms													
305	810	726	660	607	559	521	485	439	378	254	254	254	254	254
300	851	762	668	632	582	538	505	462	409	333	269	269	269	269
295	897	798	721	658	605	561	523	485	434	368	282	282	282	282
290	948	838	752	686	630	582	544	505	460	399	318	297	297	297
284	948	879	787	714	663	605	561	526	480	427	368	312	312	312
279	1054	925	826	744	681	627	582	544	503	460	386	328	328	328
274	1115	973	864	777	709	650	602	561	523	472	411	343	343	343
269	1158	1038	894	803	732	673	625	582	541	485	437	383	356	356
264	1229	955	937	838	762	699	645	599	561	516	480	399	371	371
259	1303	1118	980	876	792	724	668	615	579	538	480	414	386	386
254	1425	1204	1048	926	831	754	688	640	597	554	503	437	401	401
249	1473	1245	1077	943	856	777	714	660	615	572	521	457	414	414
Up to 217	2131	1602	1405	1204	1084	940	846	772	714	666	612	556	486	486

= over 6M

= rotation through the door.

Note: Maximum length for a main-deck piece is 1000cm

UNCONTROLLED DOCUMENT (20 DECEMBER 2024 10:36:22)

UNCONTROLLED DOCUMENT

20.3 Forward LD Cargo Door

FORWARD COMPARTMENT ALLOWABLE PACKAGE SIZES										
HEIGHT IN.	WIDTH IN.									
	10	20	30	40	50	60	70	80	90	101.9
	LENGTH IN.									
64	293	273	253	233	213	193	172	152	130	
60	312	291	271	251	231	211	190	170	149	133
55	328	308	288	268	247	227	206	185	164	146
50	343	323	302	282	262	241	220	199	177	157
45	347	327	306	286	265	245	224	203	181	160
40	347	327	306	286	265	245	224	203	181	160
35	347	327	306	286	265	245	224	203	181	160
30	347	327	306	286	265	245	224	203	181	160
25	347	327	306	286	265	245	224	203	181	160
20	347	327	306	286	265	245	224	203	181	160
15	347	327	306	286	265	245	224	203	181	160
10	347	327	306	286	265	245	224	203	181	160
5	347	327	306	286	265	245	224	203	181	160

20.4 Aft LD Cargo Door

AFT COMPARTMENT ALLOWABLE PACKAGE SIZES										
HEIGHT IN.	WIDTH IN.									
	10	20	30	40	50	60	70	80	90	101.9
	LENGTH IN.									
64	293	273	253	233	213	193	172	152	130	
60	312	291	271	251	231	211	190	170	149	133
55	328	308	288	268	247	227	206	185	164	146
50	343	323	302	282	262	241	220	199	177	157
45	347	327	306	286	265	245	224	203	181	160
40	347	327	306	286	265	245	224	203	181	160
35	347	327	306	286	265	245	224	203	181	160
30	347	327	306	286	265	245	224	203	181	160
25	347	327	306	286	265	245	224	203	181	160
20	347	327	306	286	265	245	224	203	181	160
15	347	327	306	286	265	245	224	203	181	160
10	347	327	306	286	265	245	224	203	181	160
5	347	327	306	286	265	245	224	203	181	160

UNCONTROLLED DOCUMENT (20 DECEMBER 2024 10:36:22)

UNCONTROLLED DOCUMENT

20.5 Bulk Cargo Door

BULK COMPARTMENT ALLOWABLE PACKAGE SIZES						
HEIGHT IN.	WIDTH IN.					
	5	10	15	20	25	33.2
	LENGTH IN.					
40	169	169	154	142	133	123
36	169	169	161	147	137	128
32	169	169	169	154	143	133
28	169	169	169	162	150	137
24	169	169	169	162	150	137
20	169	169	169	162	150	137
16	169	169	169	162	150	137
12	169	169	169	162	150	137
8	169	169	169	162	150	137
4	169	169	169	162	150	137

Note: To convert from inches to centimetres, multiply by 2.54

UNCONTROLLED DOCUMENT

UNCONTROLLED DOCUMENT

UNCONTROLLED DOCUMENT (20 DECEMBER 2024 10:36:22)

UNCONTROLLED DOCUMENT

21. Contour Drawings

21.1 JI Contour

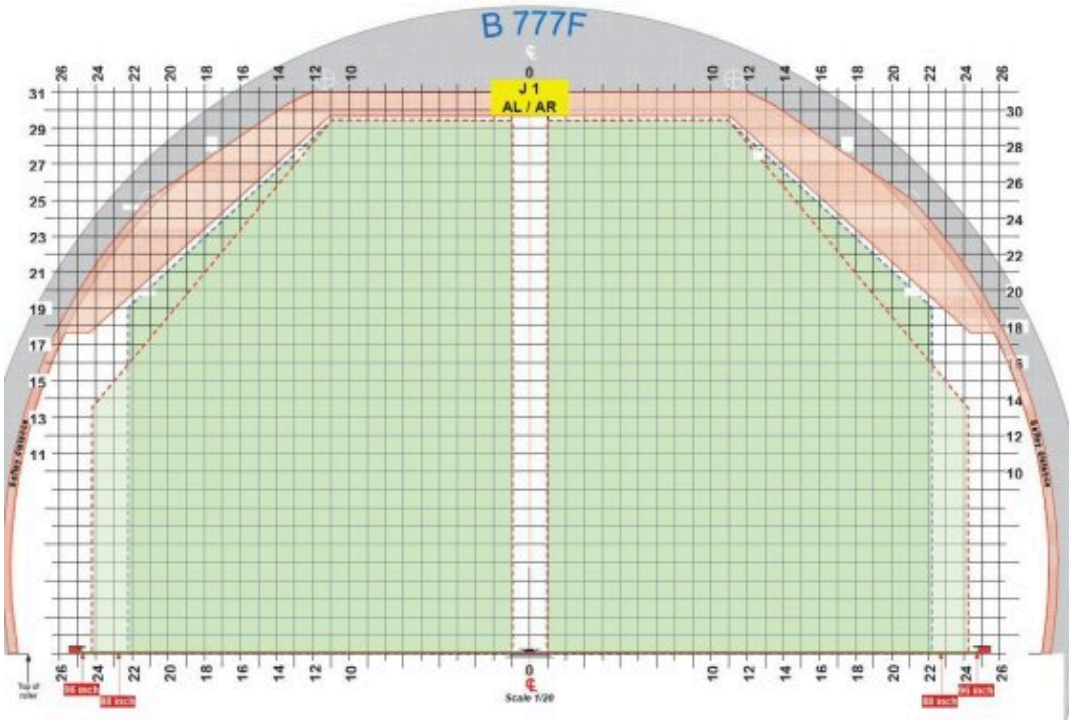

21.2 JIII Contour

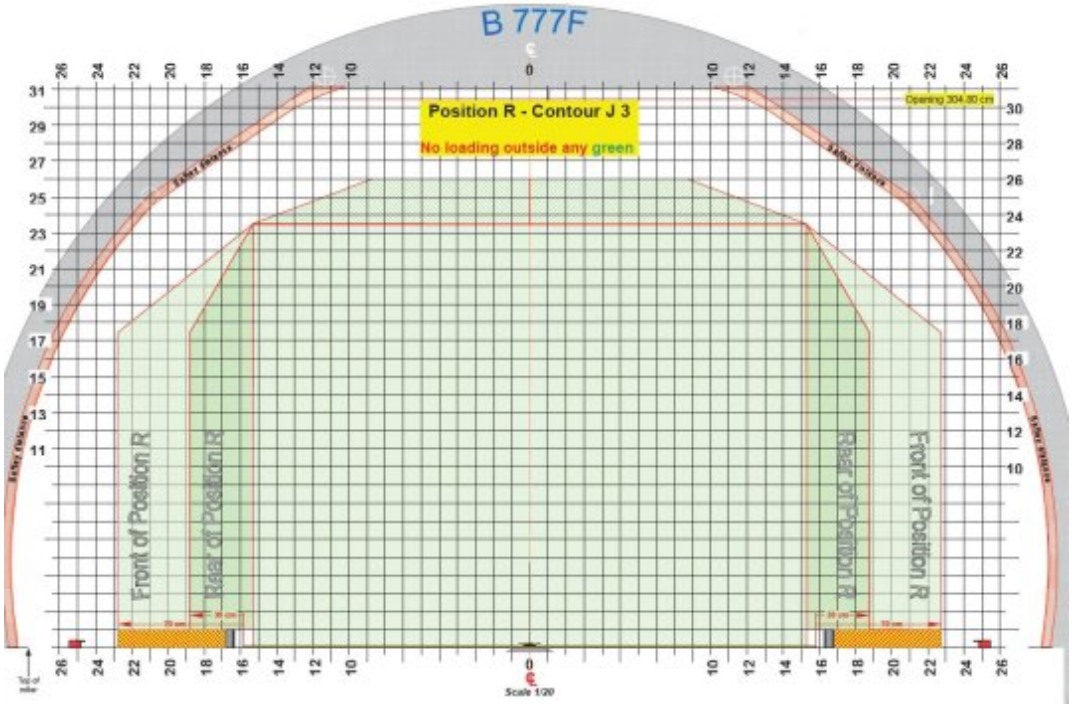

UNCONTROLLED DOCUMENT

UNCONTROLLED DOCUMENT (20 DECEMBER 2024 10:36:22)

UNCONTROLLED DOCUMENT

21.3 JIV Contour

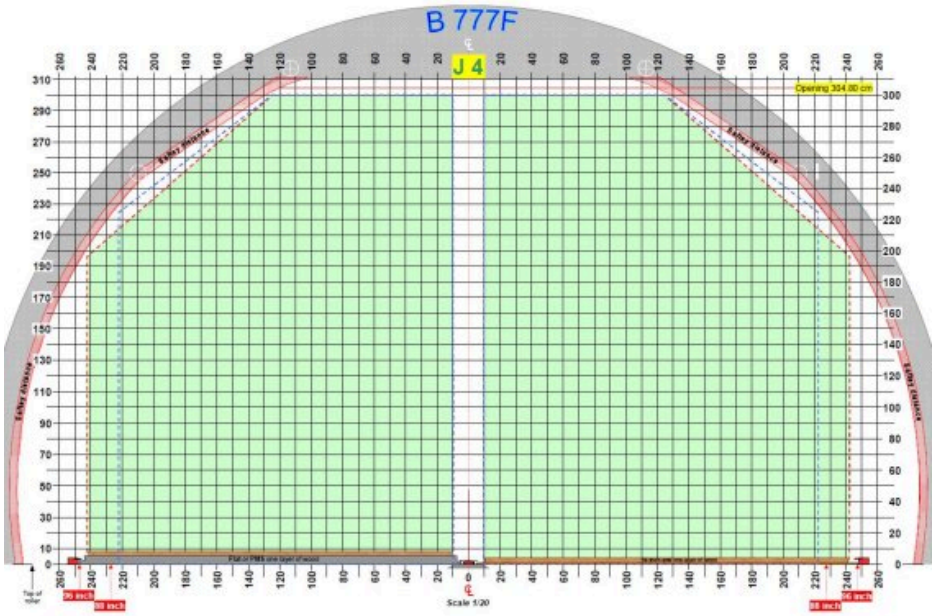

UNCONTROLLED DOCUMENT

UNCONTROLLED DOCUMENT

UNCONTROLLED DOCUMENT (20 DECEMBER 2024 10:36:22)