UNCONTROLLED DOCUMENT



GRX AN32

Air Company Grodno AN32A

Revision: 2
Date: 25 September 2024

1 Air Company Grodno A32 A Registrations

2 Aircraft Dimensions

3 Aircraft Servicing Points and Specifications

4 Ground Support Equipment

5 Standard Turnaround Times

6 Safety Areas

7 Strong Wind Conditions

8 Aircraft Door Dimensions

9 Compartment Classification and Air-Conditioning

10 Aircraft Cabin Contour Dimensions

11 Maximum Position Weights

12 Loading and Un-Loading

13 Rigid, Oversized and Special Loads

14 Restricted Commodities Loading

15 Messaging and Reporting

16 Load Control Data

UNCONTROLLED DOCUMENT

UNCONTROLLED DOCUMENT

Page	Date	Comment
14	25 September 2024	Guidance on the handling of special loads information added. *(Minor)*

UNCONTROLLED DOCUMENT

UNCONTROLLED DOCUMENT

UNCONTROLLED DOCUMENT

1. Air Company Grodno A32 A Registrations

IATA Designator:	-
ICAO Designator:	GRX
Valid for:	**EW262TK**

UNCONTROLLED DOCUMENT

UNCONTROLLED DOCUMENT

UNCONTROLLED DOCUMENT (25 SEPTEMBER 2024 15:51:45)

UNCONTROLLED DOCUMENT

2. Aircraft Dimensions

All dimensions in meters.

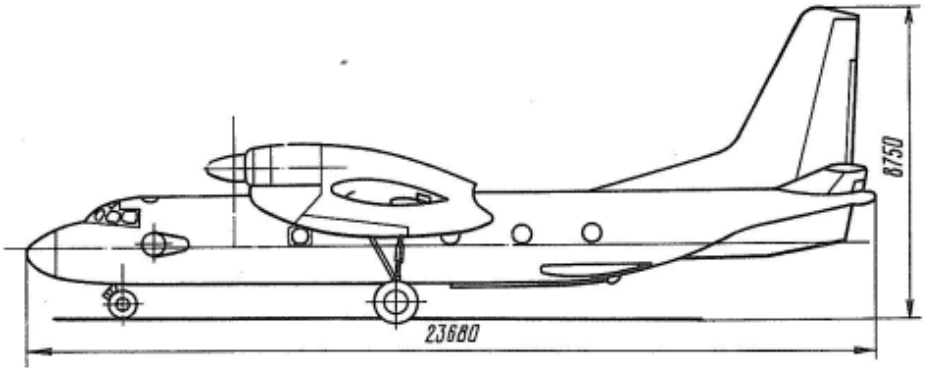

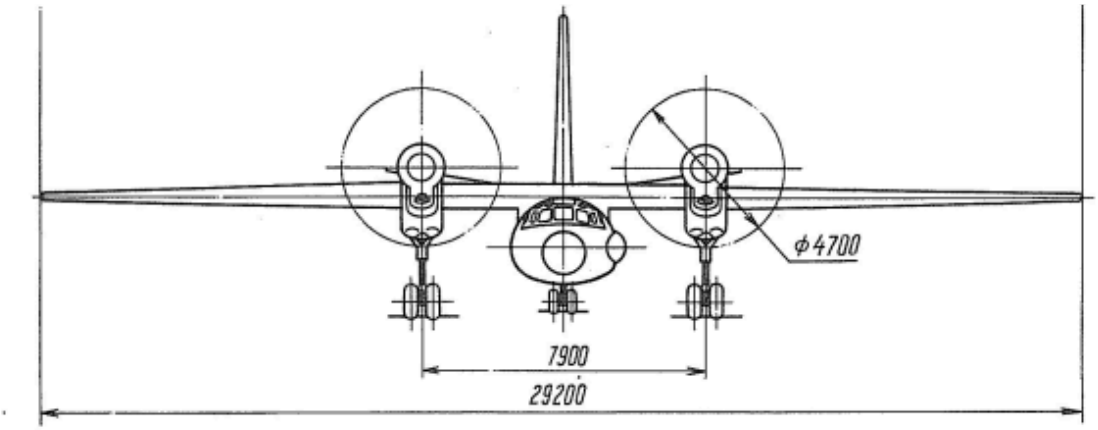

UNCONTROLLED DOCUMENT

UNCONTROLLED DOCUMENT

UNCONTROLLED DOCUMENT (25 SEPTEMBER 2024 15:51:45)

3. Aircraft Servicing Points and Specifications

3.1 Servicing Points

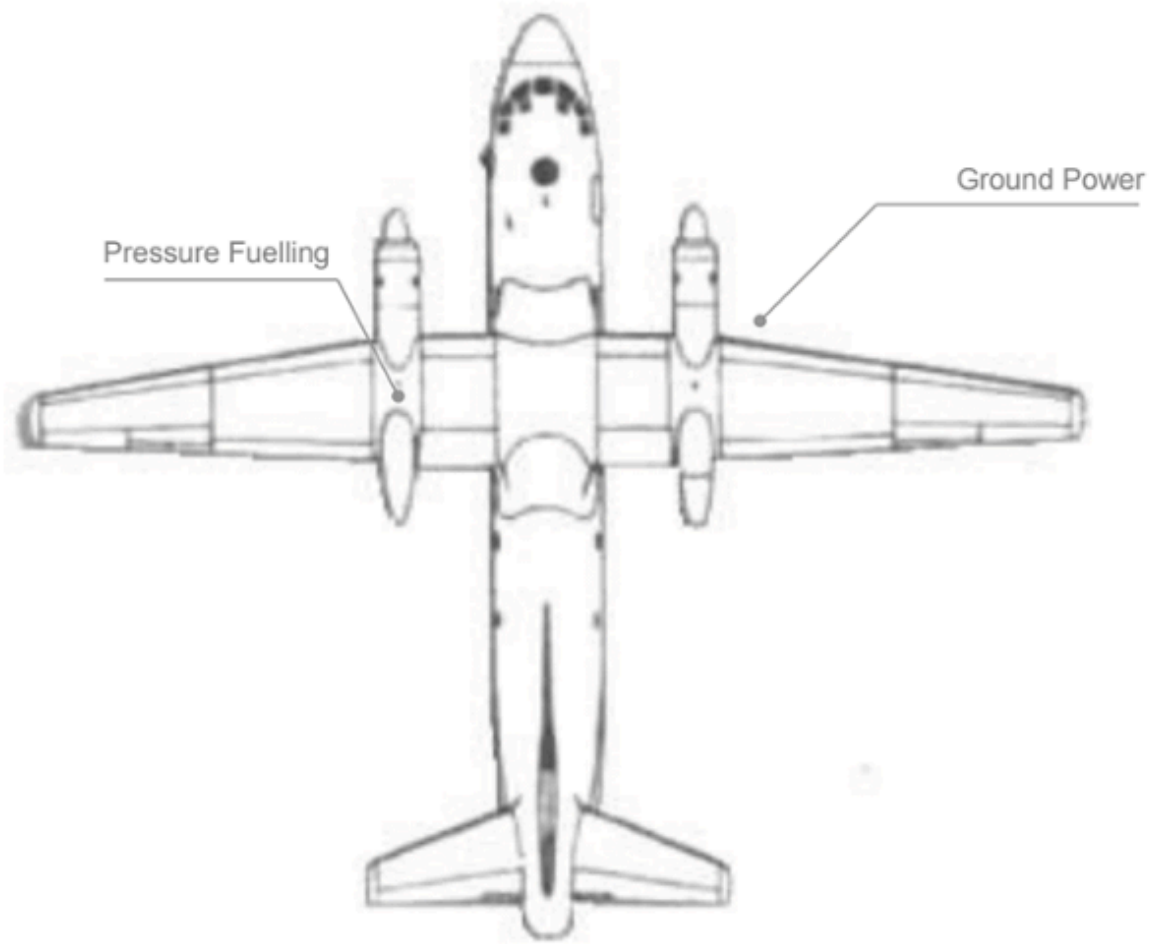

The APU outlet is in very close proximity to the GPU inlet. An incorrectly positioned GPU can pose a danger to handling crew, as the APU may give away a 3 meter flame on start-up. Exercise the utmost care during APU start-up and the positioning of staff and equipment during this procedure.

3.2 Servicing Specifications

System	Requirements	Notes
Ground Power Unit	28V DC	Portable GPU Recommended
Fuel	Jet A1	

UNCONTROLLED DOCUMENT
UNCONTROLLED DOCUMENT

UNCONTROLLED DOCUMENT (25 SEPTEMBER 2024 15:51:45)

UNCONTROLLED DOCUMENT

4. Ground Support Equipment

4.1 Positioning of GSE

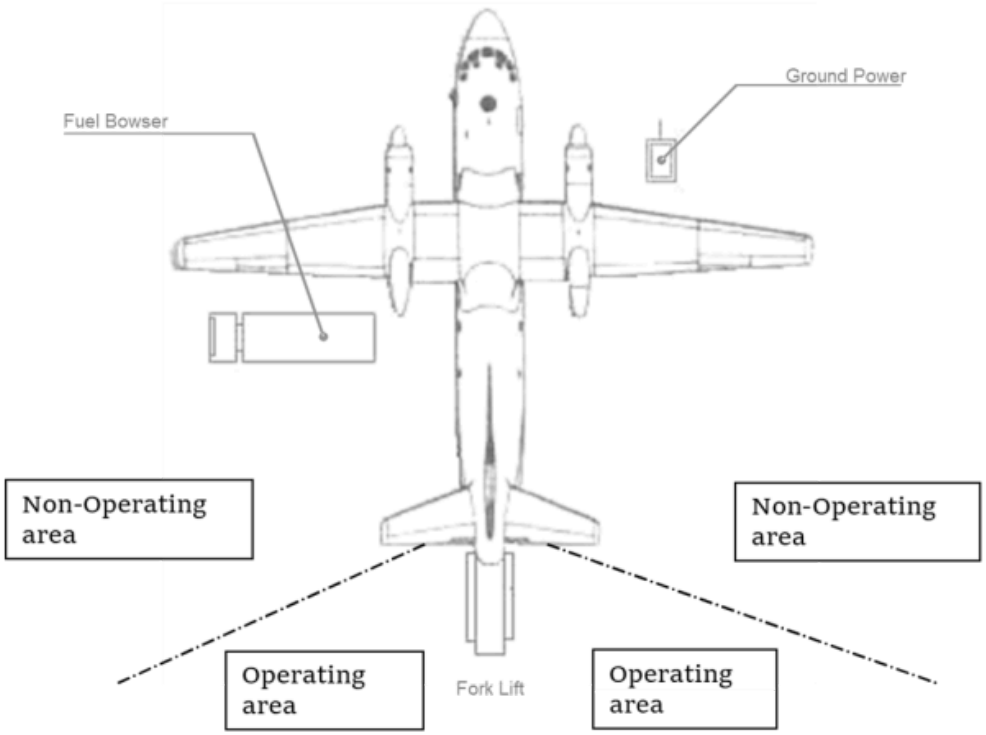

A fork lift with a minimum lifting capacity of 2.5 tons is required, equipped with a fixed tower.

Care must be exercised to ensure loads are not lifted too high, risking an impact with the aircraft tail cone.

The forklift shall stay within the operating area at all times.

4.2 GSE Requirements

GSE	Type	Quantity
Belt Loader	Standard (7.5 meter) recommended	1
Crew stairs	Self contained	N/A
Ground Power Unit	Diesel, Electric or Ground-Power	1
Tractor	N/A	1

UNCONTROLLED DOCUMENT (25 SEPTEMBER 2024 15:51:45)

5. Standard Turnaround Times

Turn-around time for a transit stop: 00:45 hour (partial off- and on-load)
Turn-around time for an end stop: 01:15 hour (full off- and on-load)

UNCONTROLLED DOCUMENT
UNCONTROLLED DOCUMENT

UNCONTROLLED DOCUMENT (25 SEPTEMBER 2024 15:51:45)

6. Safety Areas

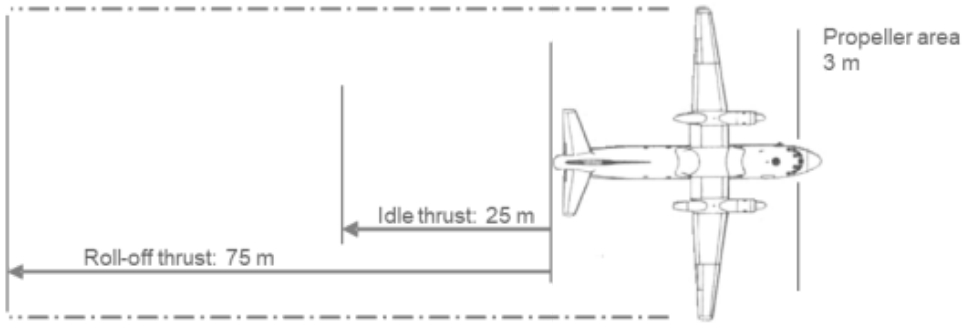

UNCONTROLLED DOCUMENT
UNCONTROLLED DOCUMENT

UNCONTROLLED DOCUMENT (25 SEPTEMBER 2024 15:51:45)

7. Strong Wind Conditions

All doors can be opened and left open, with no limits.

UNCONTROLLED DOCUMENT
UNCONTROLLED DOCUMENT

UNCONTROLLED DOCUMENT (25 SEPTEMBER 2024 15:51:45)

8. Aircraft Door Dimensions

Door width, height, and sill height are defined as follows.

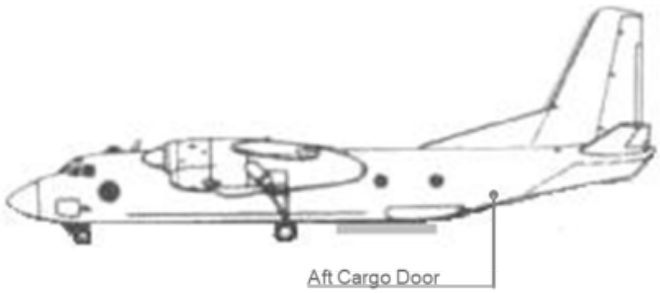

(This drawing is for illustration purposes only and may not be an exact representation of this aircraft type)

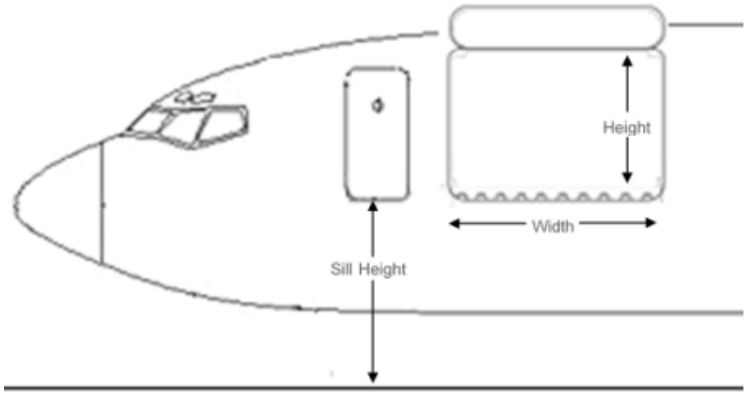

All dimensions are in centimetres (cm).

Door	Door Width	Door Height	Min. Door Sill Height	Max. Door Sill Height
Aft Cargo Ramp	227	158	140	150

UNCONTROLLED DOCUMENT
UNCONTROLLED DOCUMENT

UNCONTROLLED DOCUMENT (25 SEPTEMBER 2024 15:51:45)

UNCONTROLLED DOCUMENT

9. Compartment Classification and Air-Conditioning



9.1 Compartment Classification

Compartment	Features
Cabin	- Classification B
	- Pressurisation
	- Smoke detection
	- **Accessible** during flight

9.2 Air-Conditioning

	Main-deck
Temperature	0C - 30C
Heating	Yes
Heat Adjust	Yes
Cooling	Yes
Ventilation	Yes

UNCONTROLLED DOCUMENT

UNCONTROLLED DOCUMENT

UNCONTROLLED DOCUMENT (25 SEPTEMBER 2024 15:51:45)

10. Aircraft Cabin Contour Dimensions

10.1 Aircraft Contour Zones



Note: Striped area in drawing above must remain free of all cargo, allowing crew access to the emergency gear release mechanism.

10.1.1 Cargo Compartment Dimensions

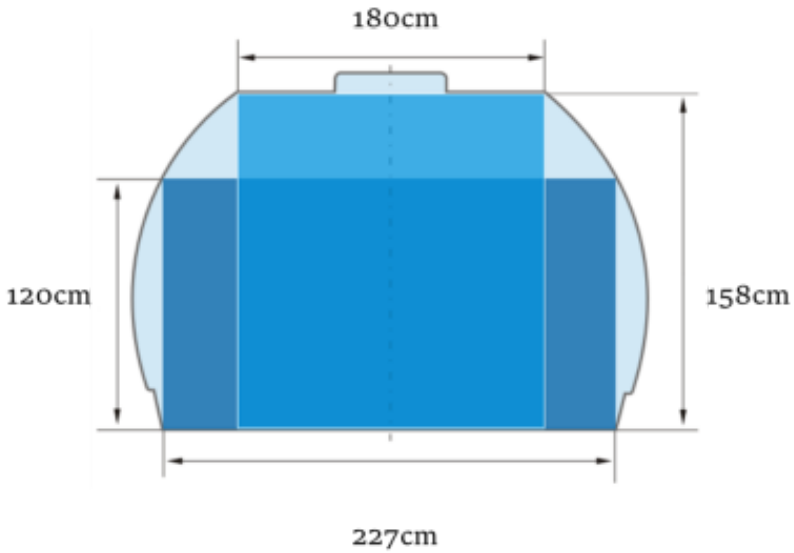

	Length (cm)	Max. Width (cm)	Floor Width (cm)	Height (cm)	Volume (m3)
Cabin	1110	227	227	158	39.8

UNCONTROLLED DOCUMENT
UNCONTROLLED DOCUMENT

UNCONTROLLED DOCUMENT (25 SEPTEMBER 2024 15:51:45)

11. Maximum Position Weights

11.1 Maximum Main-deck Zone Weights in Kilograms

Position	Max. Weight (KG)	Max. Floor Load (Kg/m2)
A	1850	800
B	1850	
C	1750	
D	1250	

11.2 Maximum Cabin Load

6700 kg

UNCONTROLLED DOCUMENT
UNCONTROLLED DOCUMENT

UNCONTROLLED DOCUMENT (25 SEPTEMBER 2024 15:51:45)

UNCONTROLLED DOCUMENT

12. Loading and Un-Loading

12.1 Un-Loading Sequence

Un-load the main deck in the following numbered sequence, and respect the standard step un-loading method:



12.2 Loading Sequence

Load the main deck in the following numbered sequence, and respect the standard step un-loading method:



12.3 Loading Notes

12.3.1 Tail-stand

For aircraft fitted with a tail-stand, it must be correctly installed prior to any un-loading or loading activities.

UNCONTROLLED DOCUMENT

UNCONTROLLED DOCUMENT (25 SEPTEMBER 2024 15:51:45)

13. Rigid, Oversized and Special Loads

For guidance on the handling of special loads, please refer to the Special Loads Regional Contact Instructions outlined in Chapter 6 **6.12.22.3 - Determining Loadability of Special Loads**. Where direct operator approval is required, the Regional Airside Team will liaise with Global Airside as needed.

13.1 Aircraft Engines

This aircraft type does not support the carriage of aircraft engines.

13.2 Live Animals

13.2.1 Horses

This aircraft type does not support the carriage of horses.

13.2.2 Other Live Animals

The following table provides a list of commonly transported animals. If there is a requirement to transport animals not listed below, contact your Special Loads Regional Conact for more information.

	Main-Deck
Day-old chickens	Yes
Dogs or Cats	
Small Mammals or Birds	
Tropical Fish	
Reptiles or Amphibians	
Eels	
Crustaceans or Molluscs	
Insects	
Hatching eggs	

UNCONTROLLED DOCUMENT
UNCONTROLLED DOCUMENT

UNCONTROLLED DOCUMENT (25 SEPTEMBER 2024 15:51:45)

14. Restricted Commodities Loading

14.1 Radioactive (RRY), Magnetised (MAG) and Cargo Aircraft Only (CAO)

The following Dangerous Good type loading restrictions apply. The Dangerous Good type can be loaded on positions marked with a 'Y'. The Dangerous Good type cannot be loaded on positions marked with a 'N'.

	Position			
DG Type	A	B	C	D
MAG	N	N	Y	Y
CAO	Y	Y	Y	Y
RRY (Class 7)	N	N	Y	Y

Note: Cargo Aircraft Only (CAO) can be loaded on any Main Deck position A to D provided they are loaded accessible. Accessible means that:

- An aisle is built continually from Compt. A thru Compt. D allowing a crew member access in flight.

14.2 Dry Ice

Please see the Global Supplementary Operational Document **Dry Ice Consolidation table** for the current maximum allowed Dry Ice limits.

14.3 Dry Ice (ICE) and Live Animals (AVI)

There is no additional weight limit for the loading of Dry Ice (ICE) together with Live Animals (AVI) on the Main-deck.

When loading AVI and ICE together in the main-deck, **keep a minimum distance of one loading position, and load AVI forward of ICE.**

Load the AVI higher than the ICE.

14.4 Lithium Batteries

Please see the Global Supplementary Operational Document **Lithium Battery Loadability Consolidation Table** for the current UN3480 Section IA/IB (RBI), UN3090 Section IA/IB (RBM), UN3481 Section I (RLI), UN3091 Section I (RLM) load ability limits.

UNCONTROLLED DOCUMENT
UNCONTROLLED DOCUMENT

15. Messaging and Reporting

15.1 Messaging

Standard messaging rules apply.

Note: Specific messaging rules may apply depending on the area the aircraft is operating in. Check DHLAGOM for applicable regional variations.

15.2 Reporting

Standard messaging rules apply.

Note: Specific messaging rules may apply depending on the area the aircraft is operating in. Check DHLAGOM for applicable regional variations.

UNCONTROLLED DOCUMENT
UNCONTROLLED DOCUMENT

UNCONTROLLED DOCUMENT (25 SEPTEMBER 2024 15:51:45)

UNCONTROLLED DOCUMENT

16. Load Control Data

16.1 Standard Mass Additions

16.1.1 Additional Crew Members (ACM)

Maximum Number of ACMs:	1
Mass of ACM:	85 kg

16.1.2 Fly Away Kit (FAK) and Ballast

Fly Away Kit (FAK):	Not applicable.
Ballast:	-

16.2 Minimum Fuel and Standard Taxi Fuel

Minimum Fuel:	Not applicable
Standard Taxi Fuel:	240kg

16.3 LMC Restrictions

Computer Load-sheet:	Not applicable
Manuel Load-sheet:	+/- 100 kg

UNCONTROLLED DOCUMENT

UNCONTROLLED DOCUMENT

UNCONTROLLED DOCUMENT (25 SEPTEMBER 2024 15:51:45)