UNCONTROLLED DOCUMENT

UNCONTROLLED DOCUMENT

AXE B738BCF/SF

Air Explore B737-800BCF/SF

Revision: 6

Date: 21 November 2024

1 Air Explore Boeing 737-800BCF/SF Registrations

2 Aircraft Dimensions

3 Aircraft Servicing Points and Specifications

4 Ground Support Equipment

5 Standard Turnaround Times

6 Safety Areas

7 Strong Wind Conditions

8 Aircraft Door Dimensions

9 Compartment Classification and Air-Conditioning

10 Aircraft Cabin Contour Dimensions

11 Maximum Position Weights

12 Aircraft ULD Compatibility

13 Loading and Un-Loading

14 Rigid, Oversized and Special Loads

15 Restricted Commodities Loading

16 Messaging and Reporting

17 Load Control Data

18 Maximum Package Dimensions

UNCONTROLLED DOCUMENT (21 NOVEMBER 2024 12:23:03)

Page	Date	Comment
22	21 November 2024	Actual FAK is dependent on intended operations, not included in DOW. The operator and their OCC are to inform the respective stations of FAK weight and position by email notification. The Ramp supervisor shall verify FAK on every flight and report major visible discrepancies to NCG.

UNCONTROLLED DOCUMENT

UNCONTROLLED DOCUMENT

1. Air Explore Boeing 737-800BCF/SF Registrations

IATA Designator: **ED**

ICAO Designator: **AXE**

Valid for: **OMEDA, OMEDG, OMEDE, OMEDF (B737-800BCF) and OMEDC, OMEDD, OMEDI, OMEDH (B737-800SF)**

UNCONTROLLED DOCUMENT
UNCONTROLLED DOCUMENT

UNCONTROLLED DOCUMENT (21 NOVEMBER 2024 12:23:03)

2. Aircraft Dimensions

All dimensions in meters

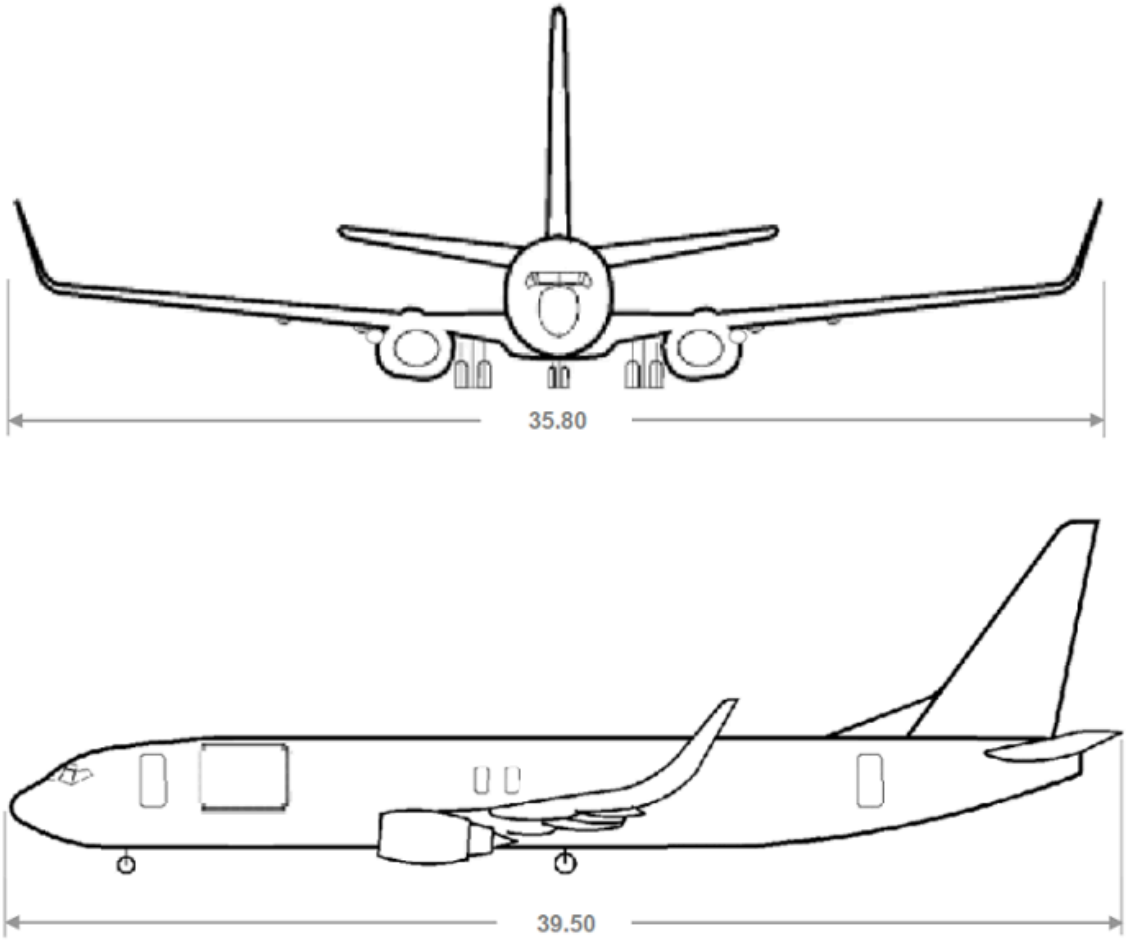

UNCONTROLLED DOCUMENT
UNCONTROLLED DOCUMENT

UNCONTROLLED DOCUMENT (21 NOVEMBER 2024 12:23:03)

3. Aircraft Servicing Points and Specifications

3.1 Servicing Points

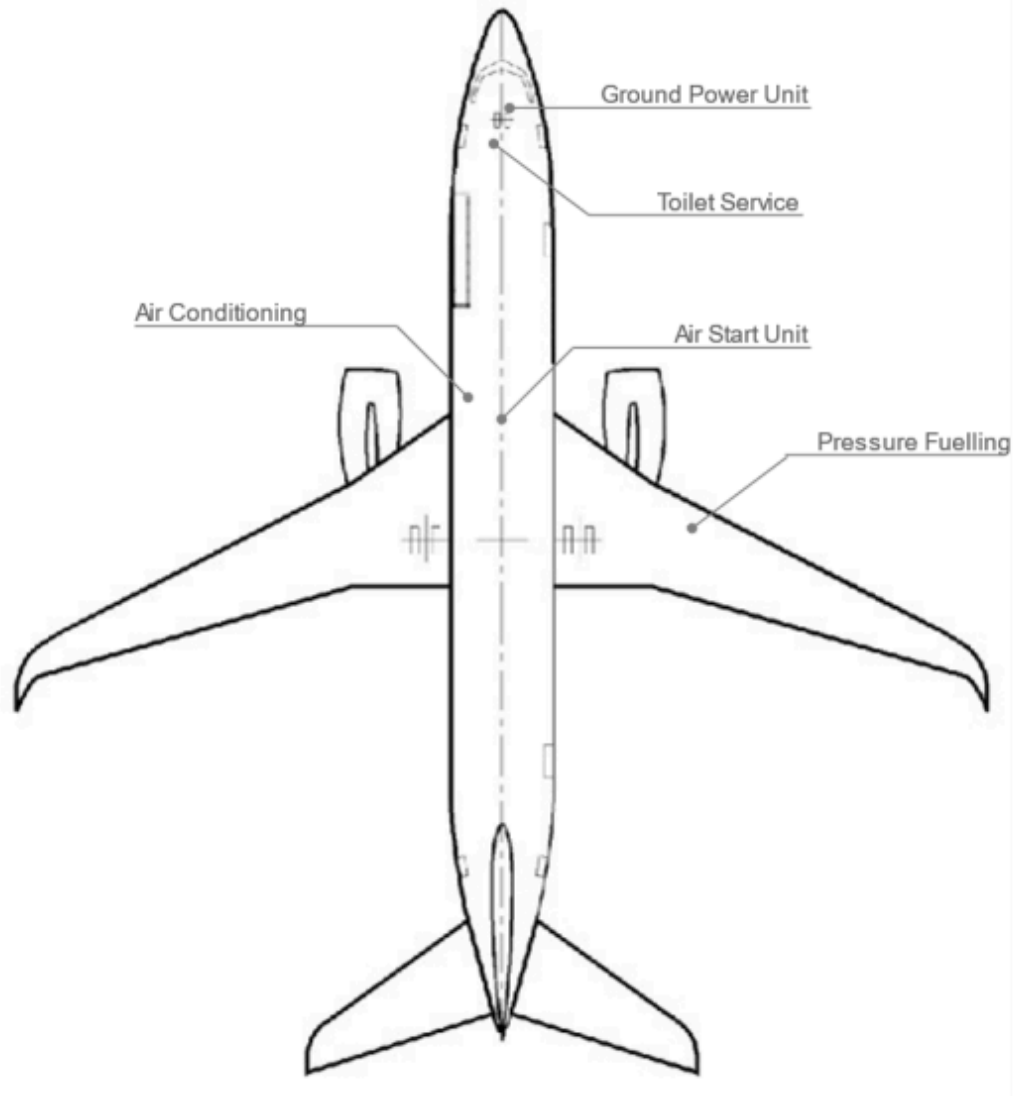

3.2 Servicing Specifications

System	Requirements	Notes
Ground Power Unit	115/200V AC / 60 kVA / 400 Hz	
Fuel	Jet A1	Fuel Control Panel **on RH wing only**
Air Condition Unit	Maximum Flow Rate 210 ppm	1 ACU inlet available
Air Start Unit	Minimum Capacity 120-145 ppm Max. / Min. pressure 45 / 30 psi Max temperature at ground connector 232°C	1 ASU inlet available.

UNCONTROLLED DOCUMENT (21 NOVEMBER 2024 12:23:03)

UNCONTROLLED DOCUMENT

4. Ground Support Equipment

4.1 Positioning of GSE

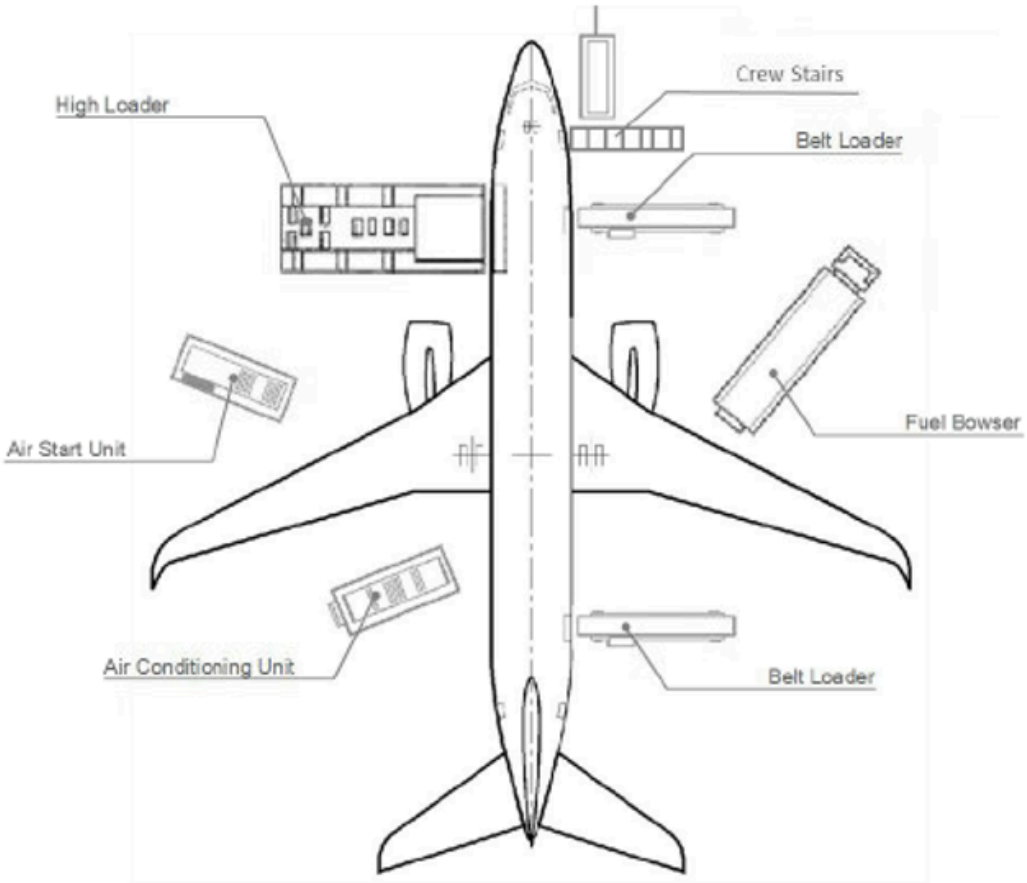

4.2 GSE Requirements

GSE	Type	Quantity
High Loader	Standard	1
Crew stairs	Platform height 2.62 – 2.77 meters	1
Ground Power Unit	Diesel, Electric or Ground-Power	1
Air Start Unit	Standard	1
Belt Loader	Standard	1 or 2
Tractor	N/A	4
Dolly Wagon Main-deck	125”/88” & 60.5”/61.4” capable	Up to 11
Belly Container / Wagon	As required	According to load

Note: *Crew stairs to be positioned at the R1 door.

UNCONTROLLED DOCUMENT (21 NOVEMBER 2024 12:23:03)

UNCONTROLLED DOCUMENT

5. Standard Turnaround Times

Turn-around time for a transit stop:	00:35 hour (partial off- and on-load)
Turn-around time for an end stop:	00:50 hour (full off- and on-load)

UNCONTROLLED DOCUMENT

UNCONTROLLED DOCUMENT

UNCONTROLLED DOCUMENT (21 NOVEMBER 2024 12:23:03)

6. Safety Areas

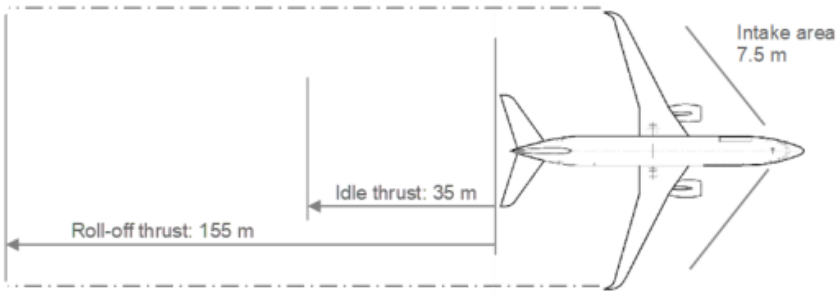

UNCONTROLLED DOCUMENT
UNCONTROLLED DOCUMENT

UNCONTROLLED DOCUMENT (21 NOVEMBER 2024 12:23:03)

7. Strong Winds Condition

If the wind conditions on the ramp reach the following speeds, the corresponding actions shall be taken.

Wind Speed	Action
Up to 40 knots	Normal Operations: All doors can be opened and left open
More than 40 knots	Do not operate or let the main deck cargo door stay open at or above the canopy position in winds more than 40 knots. Otherwise, injury to persons and damage to the aeroplane may occur.

UNCONTROLLED DOCUMENT
UNCONTROLLED DOCUMENT

UNCONTROLLED DOCUMENT (21 NOVEMBER 2024 12:23:03)

8. Aircraft Door Dimensions

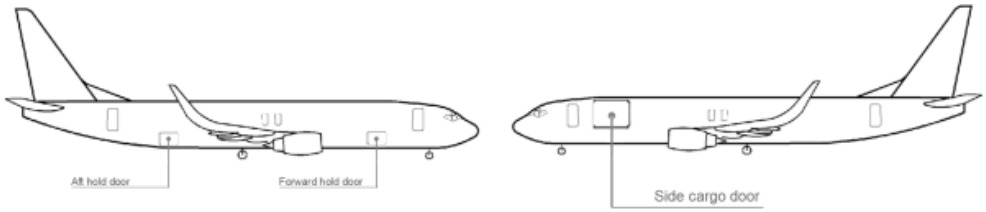

Door width, height, and sill height are defined as follows.

(This drawing is for illustration purposes only and may not be an exact representation of this aircraft type)

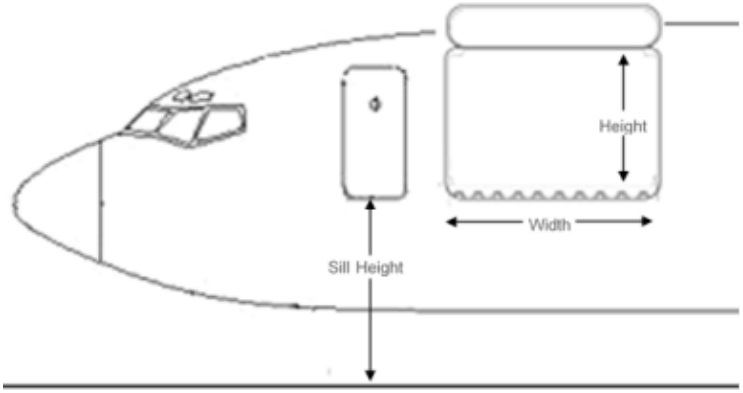

All dimensions are in Inches (in).

Door	Door Width	Door Height	Min. Door Sill Height	Max. Door Sill Height
Crew Door	-	-	103	109
Main Deck (BCF)	141	86	104	110
Main Deck (SF)	134	83	104	110
Forward Hold	48	35	50	55
Aft Hold	48	Varies 31-35	54	54

UNCONTROLLED DOCUMENT
UNCONTROLLED DOCUMENT

UNCONTROLLED DOCUMENT (21 NOVEMBER 2024 12:23:03)

UNCONTROLLED DOCUMENT

9. Compartment Classification and Air-Conditioning

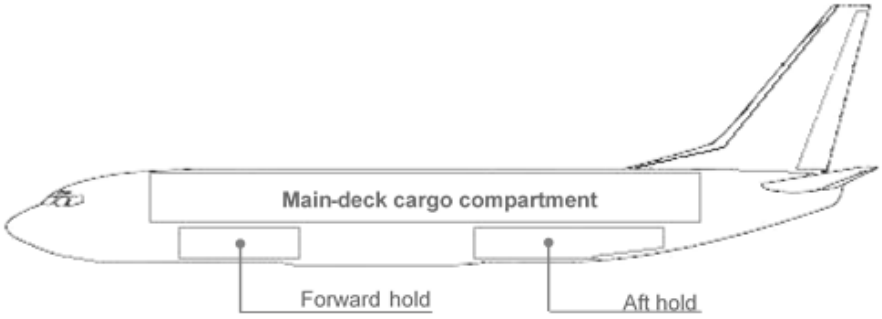

9.1 Compartment Classification

Compartment		Features
Main-deck	Position A loaded with 88" ULD **with** 50 cm (18") aisle	- Classification **E**
		- Pressurisation
		- Smoke Detection
		- **Accessible** during flight
	Position A loaded with 88" ULD **without** 50 cm (18") aisle	- Classification **B**
		- Pressurisation
		- Smoke Detection
		- **In-accessible** during flight
Lower-deck All Compartments		- Classification **C**
		- Pressurisation
		- Smoke Detection
		- Fire Suppression
		- **In-accessible** during flight

9.2 Air-Conditioning

	Main-deck	Forward Hold	Aft Hold
Temperature	18ºC - 30ºC		
Heating	Yes		
Heat adjust			
Cooling			
Ventilation			

UNCONTROLLED DOCUMENT (21 NOVEMBER 2024 12:23:03)

10. Aircraft Cabin Contour Dimensions

10.1 Aircraft Layout

The aircraft is divided into two contour zones: CI and CII.

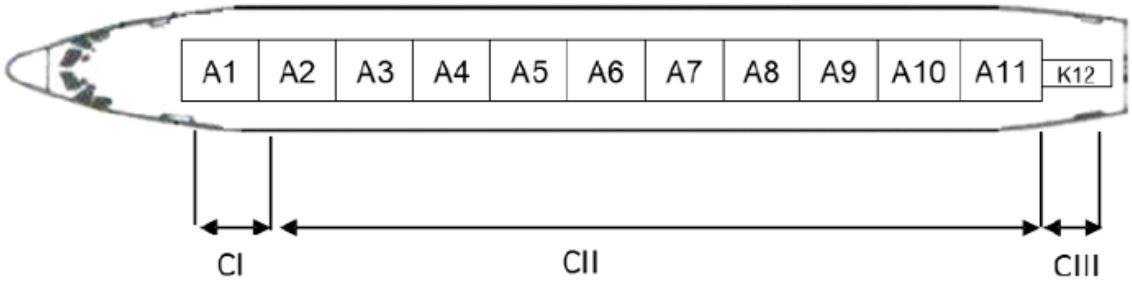

10.1.1 Contour CI

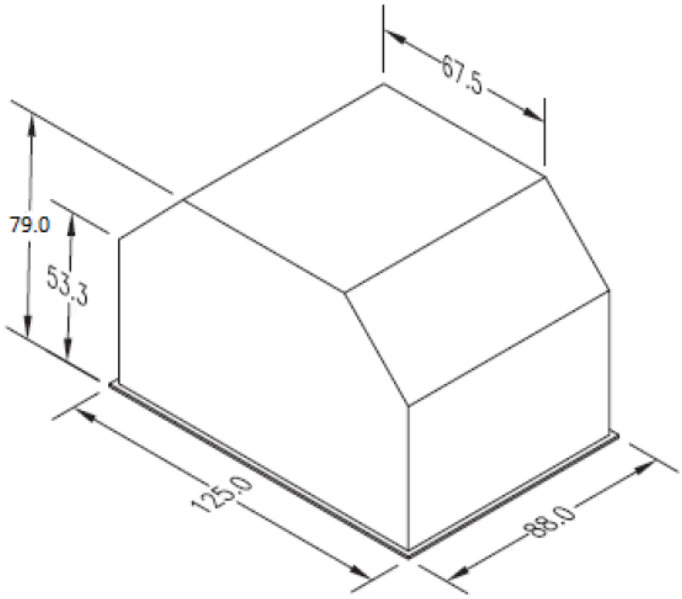

UNCONTROLLED DOCUMENT
UNCONTROLLED DOCUMENT

UNCONTROLLED DOCUMENT (21 NOVEMBER 2024 12:23:03)

UNCONTROLLED DOCUMENT

10.1.2 Contour CII

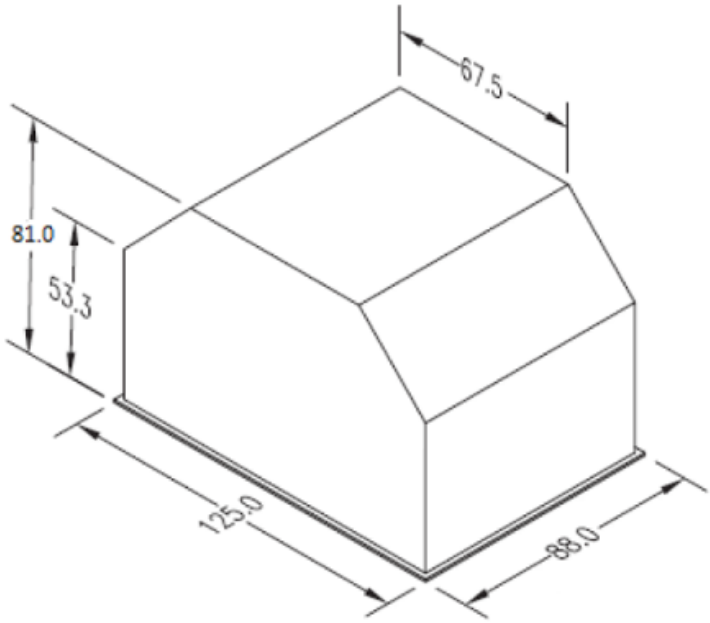

10.1.3 Contour CIII

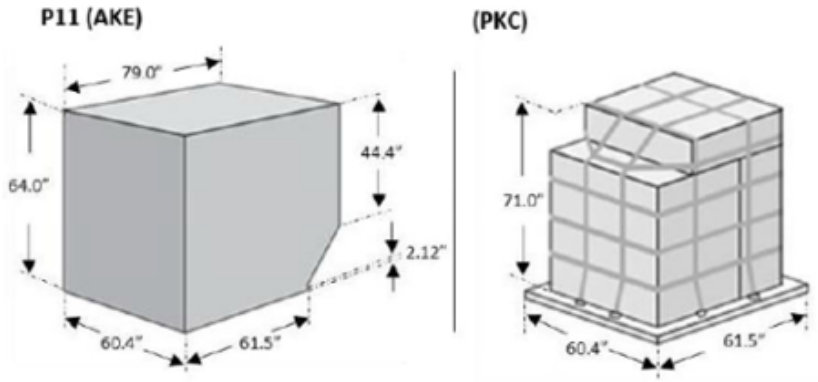

UNCONTROLLED DOCUMENT

UNCONTROLLED DOCUMENT (21 NOVEMBER 2024 12:23:03)

11. Maximum Position Weights

11.1 Maximum Main-deck ULD Weights in Kilograms

Valid for OMEDA, OMEDE, OMEDF:

	ULD Position (Max. weight in Kilograms)											
ULD Size	A1	A2	A3	A4	A5	A6	A7	A8	A9	A10	A11	K12
125”/ 88”	2368	2630	2912		4505		2912			2267		
61.5"/60.4"												1586

Valid for OMEDC, OMEDD:

	ULD Position (Max. weight in Kilograms)											
ULD Size	A1	A2	A3	A4	A5	A6	A7	A8	A9	A10	A11	K12
125”/ 88”	1814	2948			3628		2948				1814	
61.5"/60.4"												1133

Valid for OMEDG:

	ULD Position (Max. weight in Kilograms)											
ULD Size	A1	A2	A3	A4	A5	A6	A7	A8	A9	A10	A11	K12
125”/ 88”	2393	2630	2912		4499		2912			2267		
61.5"/60.4"												1558

Valid for OMEDI, OMEDH:

	ULD Position (Max. weight in Kilograms)											
ULD Size	A1	A2	A3	A4	A5	A6	A7	A8	A9	A10	A11	K12
125”/ 88”	1760	2912			3582		2912				1786	
61.5"/60.4"												1119

11.2 Maximum Total Main-deck Load

9G Barrier Limit: 23,630 Kg

UNCONTROLLED DOCUMENT
UNCONTROLLED DOCUMENT

UNCONTROLLED DOCUMENT (21 NOVEMBER 2024 12:23:03)

UNCONTROLLED DOCUMENT

11.3 Maximum Lower-deck Compartment Weights in Kilograms

Valid for all registrations:

	Fwd hold			Aft Hold		
Compartment	1a	1b	2	3	4a	4b
Max. Weight (Kg)	552	336	2670	4086	361	402
Max. Hold Weight (Kg)	3547			4849		
Volume (cu m)	19			24.9		

Valid for OMEDG:

	Fwd hold		Aft Hold	
Compartment	1	2	3	4
Max. Weight (Kg)	880	2670	4086	755
Max. Hold Weight (Kg)	3550		4823	
Volume (cu m)	4.4	14.6	20.7	4.2
	19		24.9	

UNCONTROLLED DOCUMENT

UNCONTROLLED DOCUMENT (21 NOVEMBER 2024 12:23:03)

UNCONTROLLED DOCUMENT

12. Aircraft ULD Compatibility

12.1 Aircraft Configurations

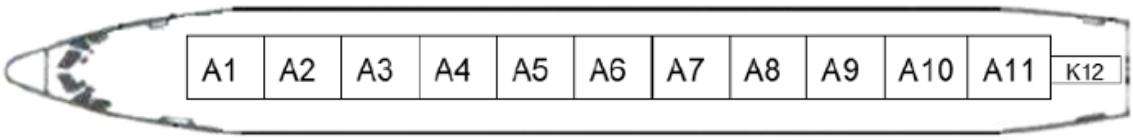

Configuration1: 11 x Lateral 125”/88” and 1 x 60.4”/61.5”

12.2 ULD Compatibility Table

The following ULD type loading restrictions apply. The ULD type can be loaded on positions marked with a ‘Y’. The ULD type cannot be loaded on positions marked with a ‘N’.

		ULD Type								
	Pos	AAA	AAC	AAJ	AKE	LAK	LAY	PAG	RKN	RKE
Configuration 1	A1	N	Y1	Y	N	Y	Y	Y	N	N
	A2	Y	Y1	Y	N	Y	Y	Y	N	N
	A3	Y	Y1	Y	N	Y	Y	Y	N	N
	A4	Y	Y1	Y	N	Y	Y	Y	N	N
	A5	Y	Y1	Y	N	Y	Y	Y	N	N
	A6	Y	Y1	Y	N	Y	Y	Y	N	N
	A7	Y	Y1	Y	N	Y	Y	Y	N	N
	A8	Y	Y1	Y	N	Y	Y	Y	N	N
	A9	Y	Y1	Y	N	Y	Y	Y	N	N
	A10	Y	Y1	Y	N	Y	Y	Y	N	N
	A11	Y	Y1	Y	N	Y	Y	Y	N	N
	K12	N	N	N	Y	N	N	N	Y	Y

Y1: Only AAC DHL serial range 9021 and higher allowed

Note: Pallet stacks not allowed on position A11.

UNCONTROLLED DOCUMENT (21 NOVEMBER 2024 12:23:03)

13. Loading and Un-Loading

13.1 Un-Loading Sequence

Step 1: Un-load the aft lower deck.

Step 2: Un-load the ULDs on the main deck in the following numbered sequence, **and respect standard stage un-loading method**.

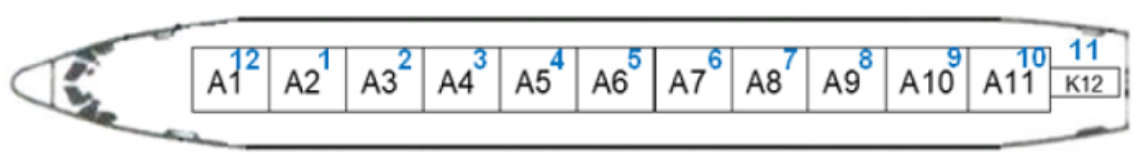

Step 3: Un-load the forward lower deck.

13.2 Loading Sequence

Step 1: Load the forward lower deck.

Step 2: Load the ULDs on the main deck in the following numbered sequence, **and respect standard stage loading method**.

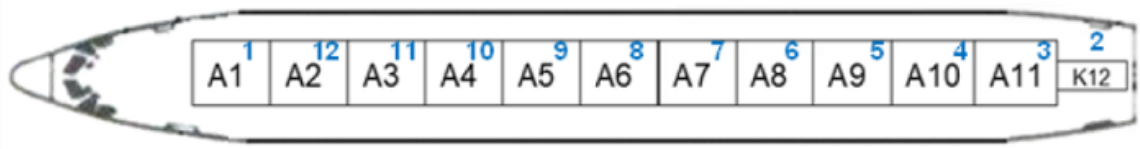

Step 3: Load the aft lower deck.

13.3 Loading Notes

13.3.1 Tail-Tipping

The B737-800BCF is not susceptible to tail-tipping. Due care, however, must be taken whilst un-loading and loading the aircraft to prevent the Centre of Gravity moving to a position that would result in tail-tipping. Following the prescribed un-loading and loading sequence is therefore of paramount importance. Furthermore, care must be taken whilst loading the ULDs on the main-deck, moving them at a moderate pace up and down the aircraft to prevent a sudden CoG shift, which may result in a tail-tip situation.

13.3.2 Tail Post

The use of a tail-post is not permitted on this aircraft.

13.3.3 ULD Clearance

There is very limited clearance between some ULDs and the inner roof lining on this aircraft. ULDs, AAA and AAC/LAY especially, which are even slightly out of contour will impact the roof lining and cause damage. Due care must therefore be exercised when un-loading and loading this aircraft.

UNCONTROLLED DOCUMENT
UNCONTROLLED DOCUMENT

UNCONTROLLED DOCUMENT (21 NOVEMBER 2024 12:23:03)

UNCONTROLLED DOCUMENT

13.3.4 Ballast ULD

If a ballast ULD is loaded on the aircraft, this shall not be removed by any member of staff unless the staff member has received specific written instruction to do so from the operator.

UNCONTROLLED DOCUMENT

UNCONTROLLED DOCUMENT

UNCONTROLLED DOCUMENT (21 NOVEMBER 2024 12:23:03)

14. Rigid, Oversized and Special Loads

For guidance on the handling of special loads, please refer to the Special Loads Regional Contact Instructions outlined in Chapter 6 **6.12.22.3 - Determining Loadability of Special Loads**. Where direct operator approval is required, the Regional Airside Team will liaise with Global Airside as needed.

14.1 Floating / Heavy Pallets

There are currently no provisions for carrying ULDs in floating positions Permission must be sought from the operator before accepting any ULDs which require loading on a floating position.

The permission, including a special loading instruction, will be granted only after all details concerning the load and the loading have been checked and clarified.

14.2 Crushable Cargo Requirements

When carrying rigid cargo on the main deck, at least two cargo positions forward of the rigid cargo shall be frangible cargo.

The above restrictions do not apply if the forward-most rigid cargo and all cargo aft of it is restrained to a 9g forward load factor. Care must be taken to ensure that piercing cargo is adequately restrained to the pallet tor with tie downs to the cargo floor for 9g.

The purpose of placing frangible cargo between the rigid cargo and Rigid Cargo Barrier (RCB) is to prevent rigid cargo from contacting RCB.

Any or all positions may be vacant or contain empty ULDs, but at least two cargo positions must contain frangible cargo forward of the rigid cargo position.

14.3 Piercing Cargo

Piercing cargo may not be loaded on the first and last loaded position on the aircraft.

Loading of Piercing Cargo is not allowed in Positions A1, A11 and P12.

A ULD with piercing cargo oriented to pose a hazard to the bulkhead when broken loose during a 9 g forward condition must be treated as rigid and located aft of 2 positions of frangible cargo.

rcing cargo must be adequately restrained to the pallet for load directions in which the orientation of the piercing cargo poses a hazard to the airplane structures, systems, or occupants if the piercing cargo were to come loose in Flight or ground manoeuvring conditions.

14.4 Aircraft Engines

Aircraft engines shall be loaded in positions P5-P6 only using a longitudinal 125”/96” engine pallet configuration.

The following engine types are loadable on this aircraft: CFM56-7, CFM56-3

Permission must be sought from your Regional Special Loads contact before accepting aircraft engines.

UNCONTROLLED DOCUMENT
UNCONTROLLED DOCUMENT

UNCONTROLLED DOCUMENT (21 NOVEMBER 2024 12:23:03)

UNCONTROLLED DOCUMENT

14.5 Live Animals

14.5.1 Horses

No Horses to be caried on these aircraft.

14.5.2 Other Live Animals

The following table provides a list of commonly transported animals. If there is a requirement to transport animals not listed below, contact your Regional Special Loads conatct.

	Main-Deck	FWD Hold	AFT Hold
Horses	No	No	
Day-old chickens	Yes		
Monkeys	X		
Pigs	X		
Cattle	X		
Sheep or Goats	X	X	
Dogs or Cats	X		
Small mammals or Birds	X		
Tropical Fish	X		
Reptiles or Amphibians	X		
Eels	Yes		
Crustaceans or Molluscs	Yes		
Bees	X		
Hatching eggs	Yes		
Insects	Yes		

X: Depends on accessibility, air conditioning and flight duration. Contact your Regional Special Loads conatct for more details.

UNCONTROLLED DOCUMENT

UNCONTROLLED DOCUMENT (21 NOVEMBER 2024 12:23:03)

15. Restricted Commodities Loading

15.1 Radioactive (RRY), Magnetised (MAG) and Cargo Aircraft Only (CAO)

The following Dangerous Good type loading restrictions apply. The Dangerous Good type can be loaded on positions marked with a 'Y'. The Dangerous Good type cannot be loaded on positions marked with a 'N'.

	Position													
DG Type	A1	A2	A3	A4	A5	A6	A7	A8	A9	A10	A11	K12	FWD	AFT
MAG	N	N	N	N	N	N	N	N	N	N	Y	Y	N	N
CAO	Y	Y	Y	Y	Y	Y	Y	Y	Y	Y	Y	Y	Y	Y
RRY	N	N	N	N	Y	Y	Y	Y	Y	Y	Y	Y	N	N

Note: Cargo Aircraft Only (CAO) can be loaded on any Main Deck position from A1 to K12 provided they are loaded accessible. Accessible means that:

- The CAO is loaded on a pallet
- All positions forward of the CAO are loaded with 88" pallets with aisle

15.2 Dry Ice

Please see the Global Supplementary Operational Document **Dry Ice Consolidation table** for the current maximum allowed Dry Ice limits.

Dry Ice (ICE) and Live Animals (AVI)

There is no weight limit for the loading of Dry Ice (ICE) together with Live Animals (AVI) on the Main-deck.

15.3 Lithium Batteries

Load in accordance with current IATA DGR.

Please see the Global Supplementary Operational Document **Lithium Battery Loadability Consolidation Table** for the current UN3480 Section IA/IB (RBI), UN3090 Section IA/IB (RBM), UN3481 Section I (RLI), UN3091 Section I (RLM) load ability limits.

UNCONTROLLED DOCUMENT
UNCONTROLLED DOCUMENT

UNCONTROLLED DOCUMENT

16. Messaging and Reporting

16.1 Messaging

Standard messaging rules apply.

16.2 Reporting

Standard reporting rules apply.

UNCONTROLLED DOCUMENT

UNCONTROLLED DOCUMENT

UNCONTROLLED DOCUMENT (21 NOVEMBER 2024 12:23:03)

17. Load Control Data

17.1 Standard Mass Additions

17.1.1 Additional Crew Members (ACM)

A/C Registration	Maximum Number of ACMs	Mass of ACM (kg)
OMEDA	4	85
OMEDG, OMEDE, OMEDF	3	85
OMEDI, OMEDH	7	85

17.1.2 Fly Away Kit (FAK) and Ballast

Actual FAK is dependent on intended operations, not included in DOW. The operator and their OCC are to inform the respective stations of FAK weight and position by email notification. The Ramp supervisor shall verify FAK on every flight and report major visible discrepancies to NCG.

Ballast: Not standard, but often required for ferry flights and then to be planned as additional weight as not included in the DOW/DOI.

Above or adjusted weights must be added in Sable and on the Load Plan by Load Control for every flight and verified by the Ramp Team.

17.1.3 Minimum Fuel and Standard Taxi Fuel

Minimum Fuel:	Not Applicable
Standard Taxi Fuel:	200 kg

17.2 LMC Restrictions

LMC not accepted, new Loadsheet must be produced.

17.3 Minimum Flight Weight

N/A

UNCONTROLLED DOCUMENT
UNCONTROLLED DOCUMENT

UNCONTROLLED DOCUMENT (21 NOVEMBER 2024 12:23:03)

UNCONTROLLED DOCUMENT

18. Maxiumum Package Dimensions

18.1 Main Cargo Door (BCF)

MAIN CARGO COMPARTMENT MAXIMUM ALLOWABLE PACKAGE SIZES - SIDE CARGO DOOR												
HEIGHT IN.	WIDTH IN.											
	10	20	30	40	50	60	70	80	88	100	108	125
	LENGTH IN.											
82	320	260	220	180	150	130	*	*	*	*	*	*
80	350	290	240	190	180	160	*	*	*	*	*	*
70	540	400	320	260	220	200	170	130	*	*	*	*
60	650	520	400	320	260	230	200	170	160	140	130	*
50	650	650	480	370	300	260	230	200	180	160	130	125
40	650	650	480	370	300	260	230	200	180	160	130	125
30	650	650	500	380	320	260	230	200	190	165	130	125
20	650	650	500	380	320	260	230	200	190	165	130	125
10	650	650	500	380	320	270	235	210	190	165	130	125
5	650	650	500	380	320	270	235	210	190	165	130	125

Height including ULD

Freight on board AirExplore B737s is transported by means of pallet ULDs on main deck.

18.2 Main Cargo Door (SF)

	WIDTH (IN.)							
	5	20	40	60	80	100	110	125
HEIGHT (IN.)	LENGTH (IN.)							
80	355	262						
76	421	299	217					
72	509	343	241	187				
68	633	399	269	205	166			
64	735	440	289	216	174	146		
60	869	489	310	229	182	152	141	
56	950	546	334	242	190	158	146	132
52	950	630	367	259	201	165	152	132
48	950	630	367	259	201	165	152	132
44	950	630	367	259	201	165	152	132
40	950	630	367	259	201	165	152	132
36	950	630	367	259	201	165	152	132
32	950	630	367	259	201	165	152	132
28	950	630	367	259	201	165	152	132
24	950	630	367	259	201	165	152	132
20	950	630	367	259	201	165	152	132
16	950	630	367	259	201	165	152	132
12	950	630	367	259	201	165	152	132
8	950	630	367	259	201	165	152	132
4	950	630	367	259	201	165	152	132
2	950	630	367	259	201	165	152	132

UNCONTROLLED DOCUMENT (21 NOVEMBER 2024 12:23:03)

UNCONTROLLED DOCUMENT

18.3 Forward Lower-deck Hold.

HEAVY PACKAGES LIFT ASSISTED										
HEIGHT IN.	WIDTH IN.									
	5	10	15	20	25	30	35	40	45	48
	LENGTH IN.									
34	124	114	104	94	84	74	64	54	50	45
32	124	114	104	94	84	74	64	54	50	45
30	124	114	104	94	84	74	64	54	50	45
28	124	114	104	94	84	74	64	54	50	45
26	124	114	104	94	84	74	64	54	50	45
24	124	114	104	94	84	74	64	54	50	45
22	124	114	104	94	84	74	64	54	50	45
20	125	114	104	94	84	74	64	54	50	45
18	125	114	104	94	84	74	64	54	50	45
16	126	114	104	94	84	74	64	54	50	45
14	127	114	104	94	84	74	64	54	50	45
12	129	115	104	94	84	74	64	54	50	45
10	131	116	104	94	84	74	64	54	50	45
5	156	120	105	94	84	74	64	54	50	45

LIGHT PACKAGES HAND MANEUVERED[a]										
HEIGHT IN.	WIDTH IN.									
	5	10	15	20	25	30	35	40	45	48
	LENGTH IN.									
34	112	100	90	81	73	67	61	57	54	53
32	131	116	104	94	85	77	71	66	63	62
30	150	131	117	105	95	87	80	74	71	69
28	168	147	124	116	105	95	88	82	77	76
26	188	161	142	126	113	103	94	88	83	81
24	210	177	154	137	122	111	101	94	89	87
22	231	194	167	147	131	118	108	100	94	91
20	254	210	180	157	139	125	114	105	98	96
18	273	228	193	167	147	132	119	110	102	100
16	274	247	206	177	158	139	125	114	106	103
14	275	267	220	188	169	145	130	119	110	107
12	277	273	233	197	171	151	135	123	113	110
10	277	274	250	210	181	159	142	129	118	112
5	280	276	273	242	205	178	158	142	130	116

[a] Package length is limited to a maximum of 205 inches when transverse cargo nets are installed.

UNCONTROLLED DOCUMENT (21 NOVEMBER 2024 12:23:03)

18.4 Aft Lower-deck Hold

HEAVY PACKAGES LIFT ASSISTED										
HEIGHT IN.	WIDTH IN.									
	5	10	15	20	25	30	35	40	45	48
	LENGTH IN.									
34	70	60								
32	99	89	79	70	60	49				
31	122	112	102	92	82	72	62	52	43	43
30	122	112	102	92	82	72	62	52	43	43
28	122	112	102	92	82	72	62	52	43	43
26	122	112	102	92	82	72	62	52	43	43
24	122	112	102	92	82	72	62	52	43	43
22	122	112	102	92	82	72	62	52	43	43
20	123	112	102	92	82	72	62	52	43	43
18	124	112	102	92	82	72	62	52	43	43
16	125	112	102	92	82	72	62	52	43	43
14	127	112	102	92	82	72	62	52	43	43
12	129	113	102	92	82	72	62	52	43	43
10	138	117	103	92	82	72	62	52	43	43
5	164	130	108	92	82	72	62	52	43	43

LIGHT PACKAGES HAND MANEUVERED[a]										
HEIGHT IN.	WIDTH IN.									
	5	10	15	20	25	30	35	40	45	48
	LENGTH IN.									
34	89	77	66	58	52	[b]	[b]	[b]	[b]	[b]
32	124	108	93	82	72	64	57	52	49	49
30	160	140	123	110	99	89	81	75	70	67
28	176	152	133	118	105	94	85	78	73	70
26	201	171	148	130	116	104	94	86	80	76
24	228	189	162	142	126	113	102	93	87	82
22	247	206	177	152	134	120	108	99	92	88
20	275	225	191	166	147	128	116	105	97	92
18	338	242	206	176	155	135	122	111	102	97
16	339	265	220	188	164	143	128	116	106	100
14	340	293	238	201	174	153	134	121	111	104
12	341	338	253	212	182	160	143	130	119	107
10	343	339	273	226	190	166	148	133	122	110
5	345	340	337	268	221	188	163	144	131	120

UNCONTROLLED DOCUMENT
UNCONTROLLED DOCUMENT

UNCONTROLLED DOCUMENT (21 NOVEMBER 2024 12:23:03)