UNCONTROLLED DOCUMENT

UNCONTROLLED DOCUMENT

APF F50
Amapola FlyG Fokker 50

Revision: 2
Date: 25 June 2024

1 Amapola FlyG Fokker 50 Registrations

2 Aircraft Dimensions

3 Aircraft Servicing Points and Specifications

4 Ground Support Equipment

5 Chocking

6 Standard Turnaround Times

7 Safety Areas

8 Strong Wind Conditions

9 Aircraft Door Dimensions

10 Compartment Classification and Air-Conditioning

11 Aircraft Cabin Contour Dimensions

12 Maximum Position Weights

13 Loading and Un-Loading – Standard Cargo Door Configuration

14 Loading and Un-Loading – Large Cargo Door Configuration

15 Rigid, Oversized and Special Loads

16 Restricted Commodities Loading

17 Messaging and Reporting

18 Load Control Data

19 Maximum Package Dimensions

UNCONTROLLED DOCUMENT (25 JUNE 2024 16:55:35)

Page	Date	Comment
13	24 June 2024	New Maximum Position Weights table added for registration SELFS including, the aircraft maximum combined loading limitations for C5 thru C8 and C6 thru C8 *(Important)*
19	25 June 2024	Links updated for Dry Ice consolidation table and the Lithium Battery Loading table.

UNCONTROLLED DOCUMENT

UNCONTROLLED DOCUMENT

UNCONTROLLED DOCUMENT

1. Amapola FlyG Fokker 50 Registrations

IATA Designator:	HP
ICAO Designator:	APF
Valid for:	**SELIS, SELIP, SELJY, SEMFB, SEMFD, SELFS**

UNCONTROLLED DOCUMENT

UNCONTROLLED DOCUMENT

UNCONTROLLED DOCUMENT (25 JUNE 2024 16:55:35)

UNCONTROLLED DOCUMENT

2. Aircraft Dimensions

All dimensions in meters.

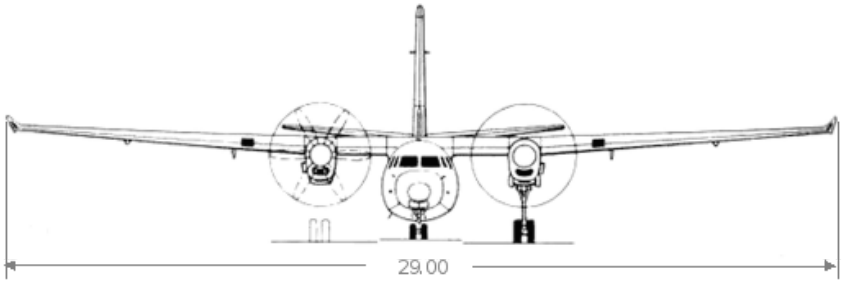

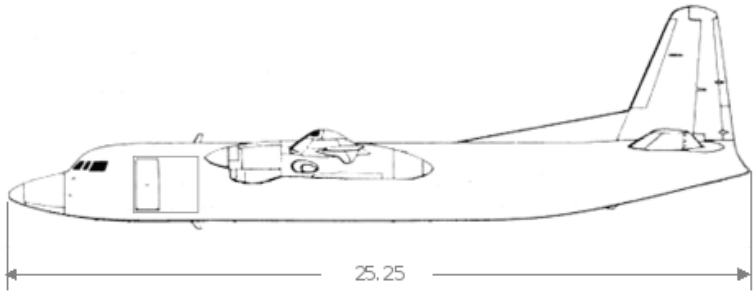

UNCONTROLLED DOCUMENT

UNCONTROLLED DOCUMENT

UNCONTROLLED DOCUMENT (25 JUNE 2024 16:55:35)

3. Aircraft Servicing Points and Specifications

3.1 Servicing Points

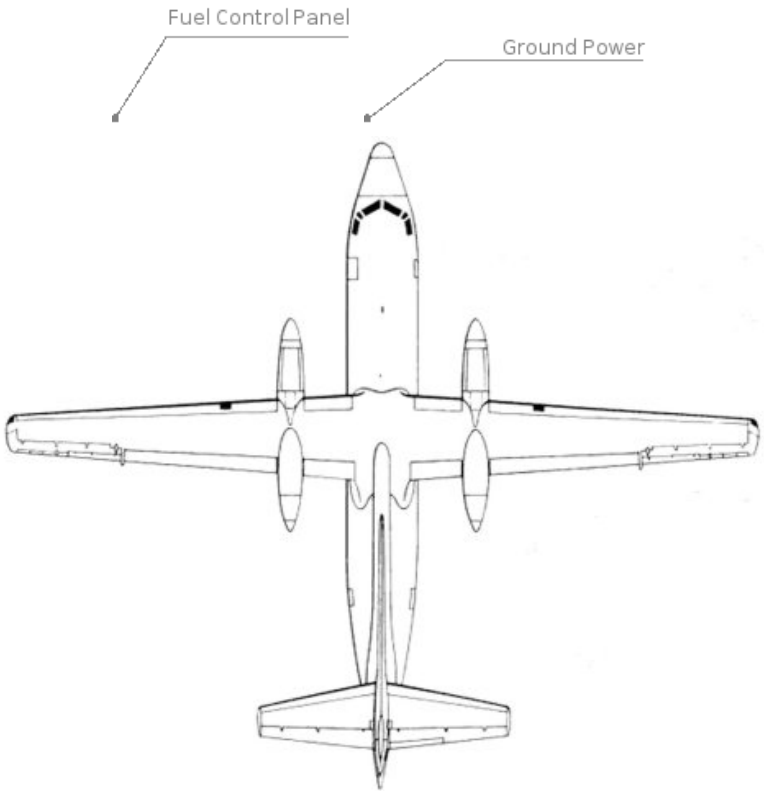

3.2 Servicing Specifications

System	Requirements	Notes
Ground Power Unit	115V	
Fuel	Jet A1	

UNCONTROLLED DOCUMENT
UNCONTROLLED DOCUMENT

UNCONTROLLED DOCUMENT (25 JUNE 2024 16:55:35)

UNCONTROLLED DOCUMENT

4. Ground Support Equipment

4.1 Positioning of GSE

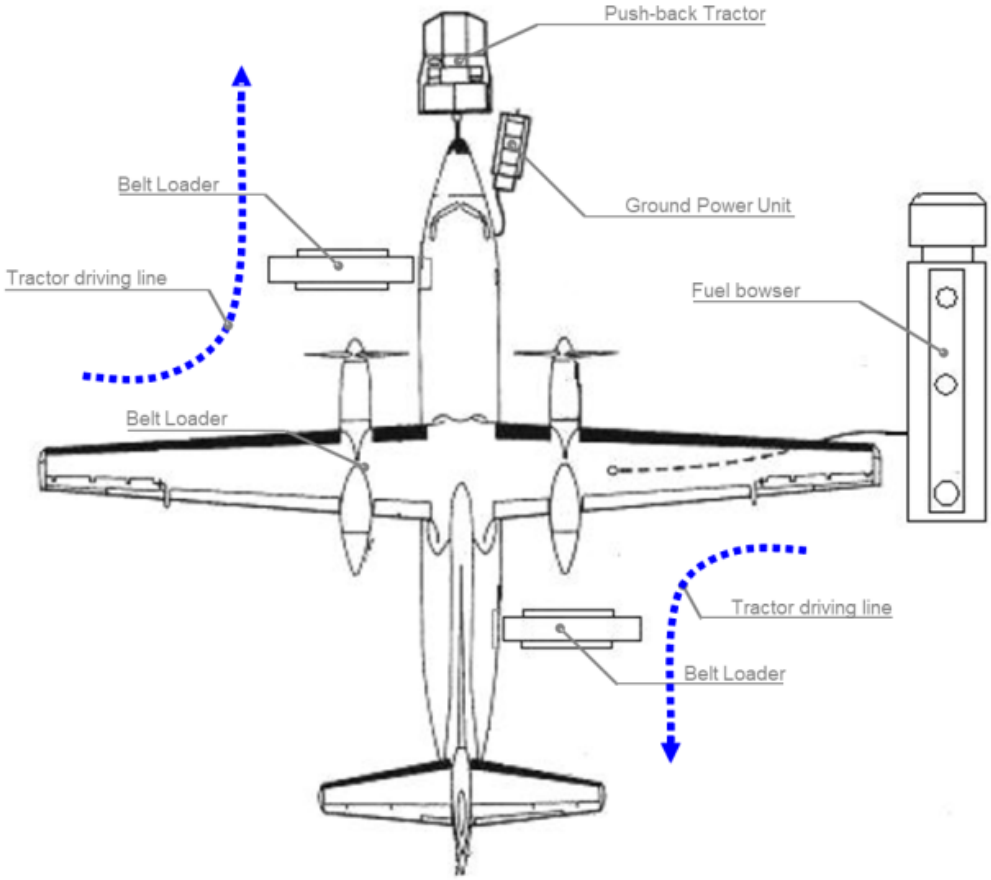

4.2 GSE Requirements

GSE	Type	Quantity	Notes
GPU	115V	1	Entry and exit paths must be clear of propellers and fuselage
Crew Stairs	Self contained	N/A	
Belt Loader	Standard	2	
Tractor	Standard	2	
Belly Container / Wagon	N/A	According to load	
Fuel Bowser	N/A	1	

UNCONTROLLED DOCUMENT

UNCONTROLLED DOCUMENT (25 JUNE 2024 16:55:35)

UNCONTROLLED DOCUMENT

5. Chocking

Standard chocking procedures, except nose-wheel chocks shall always be in place, including during un-loading and loading.

UNCONTROLLED DOCUMENT

UNCONTROLLED DOCUMENT

UNCONTROLLED DOCUMENT (25 JUNE 2024 16:55:35)

UNCONTROLLED DOCUMENT

6. Standard Turnover Times

Turn-around time: 01:30 hours (full off- and on-load)

UNCONTROLLED DOCUMENT

UNCONTROLLED DOCUMENT

UNCONTROLLED DOCUMENT (25 JUNE 2024 16:55:35)

UNCONTROLLED DOCUMENT

7. Safety Areas

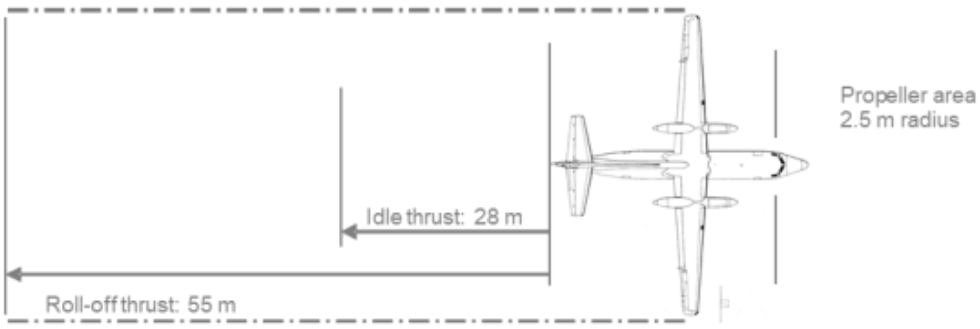

UNCONTROLLED DOCUMENT

UNCONTROLLED DOCUMENT

UNCONTROLLED DOCUMENT (25 JUNE 2024 16:55:35)

UNCONTROLLED DOCUMENT

8. Strong Wind Conditions

In the MAX OPEN position, the main cargo door is at an angle of 170° and can withstand wind forces up to 20 knots.

In the HALF OPEN position (normal condition), the main door is at an angle of 110° and must be secured with the door support strut. In this position it can withstand wind forces up to 50 knots (when secured with the strut); if the door is in half open position, attach door support strut.



If the wind speed should exceed the above reported knots during handling of the aircraft, close the doors as soon as possible and keep it closed until wind speed has decreased below the reported knot threshold.

UNCONTROLLED DOCUMENT

UNCONTROLLED DOCUMENT

UNCONTROLLED DOCUMENT (25 JUNE 2024 16:55:35)

9. Aircraft Door Dimensions

Door width, height, and sill height are defined as follows.

(This drawing is for illustration purposes only and may not be an exact representation of this aircraft type)

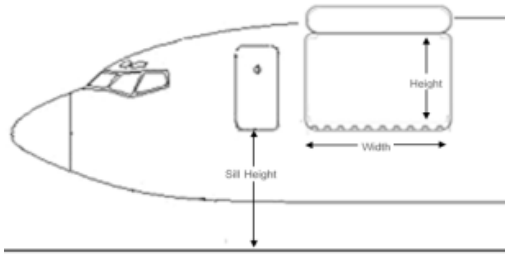

All dimensions are in centimetres (cm).

1. Std. Cargo Aircraft Door Dimensions (SEMFD and SEMFB)

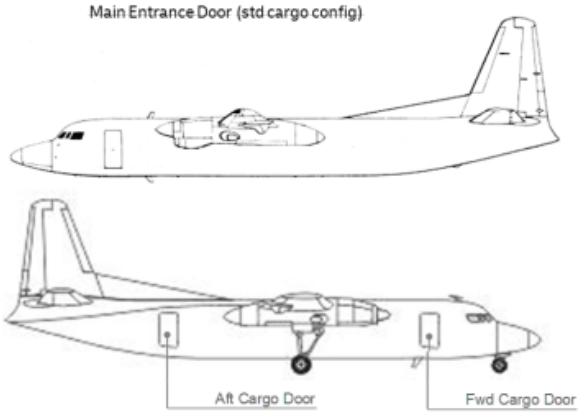

Door	Door Width	Door Height	Average Door Sill Height
Forward L/H Main Door	75	178	103
Forward R/H Cargo Door	61	127	-
Aft R/H Cargo Door	86	127	138

2. Large Cargo Door (LCD) Dimensions (SELIS, SELIP, SELJY and SELFS)

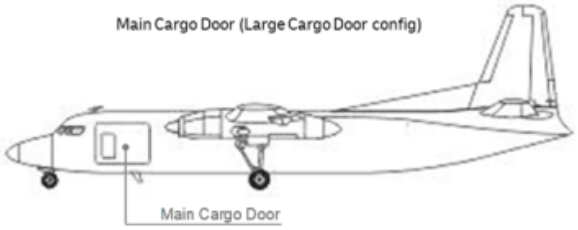

Door	Height (cm)	Width (cm)
Main Cargo Door	177	233
Aft R/H Cargo Door	127	86

UNCONTROLLED DOCUMENT
UNCONTROLLED DOCUMENT

UNCONTROLLED DOCUMENT (25 JUNE 2024 16:55:35)

UNCONTROLLED DOCUMENT

10. Compartment Classification and Air-Conditioning

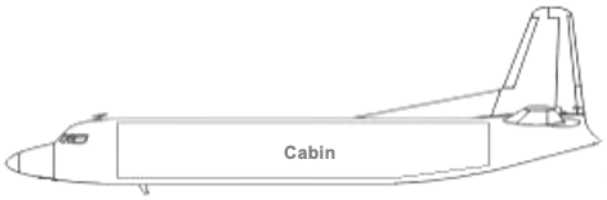

10.1 Compartment Classification

Compartment	Features
Cabin Compartment 1	- Classification **E**
	- Pressurisation
	- Smoke Detection
	- **Accessible** during flight
Cabin Compartments 2 thru 7	- Classification **E**
	- Pressurisation
	- Smoke Detection
	- **In-Accessible** during flight

10.2 Air-Conditioning

	Main-deck
Temperature	Not controlled
Heating	Yes*
Heat adjust	Yes*
Cooling	No
Ventilation	No

* Only the cockpit is heated and heat adjustable

UNCONTROLLED DOCUMENT

UNCONTROLLED DOCUMENT

UNCONTROLLED DOCUMENT (25 JUNE 2024 16:55:35)

11. Aircraft Cabin Contour Dimensions

11.1 Aircraft Layout



11.1.1 Cargo Compartment Dimensions

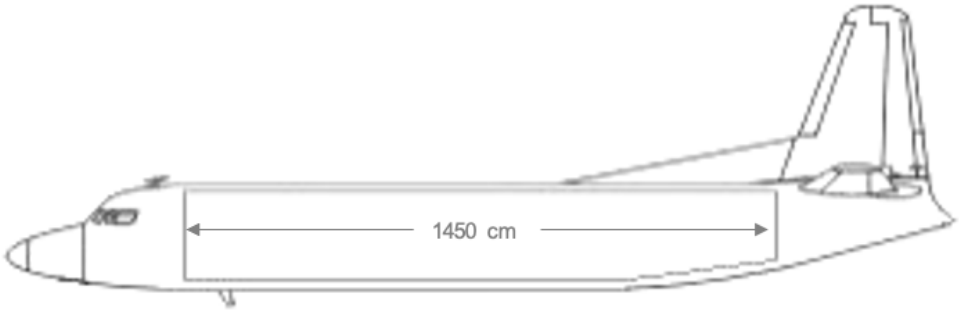

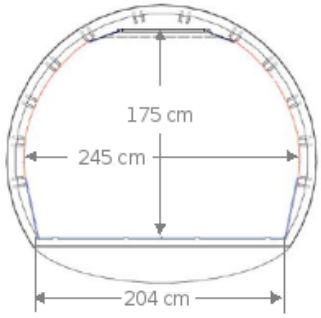

Max. Height (cm)	Max. Width (cm)	Floor Width (cm)	Length (cm)
175	245	205	1450

UNCONTROLLED DOCUMENT
UNCONTROLLED DOCUMENT

UNCONTROLLED DOCUMENT (25 JUNE 2024 16:55:35)

12. Maximum Position Weights

12.1 Maximum Main-deck Compartment Weights in Kilograms

Compartment	Max. Weight (kg)	Max. Floor Load (kg/m2)	Volume (m3)
1	1050	488	56
2	1550		
3	1550		
4	1550		
5	1050		
6	700		
7	170		

Note: load limit in Zone 6 may be increased by the unused capacity of Zone 7.

Valid for Registration: SELFS only

Compartment	Max. Weight (kg)	Max. Floor Load (kg/m2)	Volume (m3)
1	1000	488	56
2	1240		
3	1390		
4	1550		
5	1240		
6	1240		
7	1000		
8	100		

Note: Combined maximum loading limits apply. Please see the information below:

Max. Combined limits C5 thru C8 = 3200kg
Max. Combined limits C6 thru C8 = 2300kg

UNCONTROLLED DOCUMENT
UNCONTROLLED DOCUMENT

UNCONTROLLED DOCUMENT (25 JUNE 2024 16:55:36)

13. Loading and Un-loading - Standard Cargo Door Configuration

Risk of Tail-tipping

13.1 Un-Loading Sequence

Observe the following rules to prevent tail-tipping

Valid for Std cargo door config. This version has 6 compartments plus an extra shelf allowing max 170kg (comp 7)

Unload the cargo in the following sequence:

- Step 1: Unload Compartments 6 through 2 via aft R/H cargo door. Un-loading sequence; from aft to fwd.
- Un-loading Comp 1 first is allowed if flight crew approve Index change before off load.
- Step 2: Unload compartment 1 via L/H main cargo door.

13.2 Loading Sequence

Observe the following rules to prevent tail-tipping

Observe the following rules to avoid tail tipping. Valid for Std cargo door config.

Load the cargo in the following sequence.

- Step 1. Load compartment 4 via main L/H entrance door.
- Step 2. Load compartment 3 from fwd L/H and 5 from aft R/H at the same time.
- Step 3. Load compartment 2 from fwd L/H and 6 from aft R/H at the same time.
- Step 4. Load compartment 1 from fwd L/H

Do not block the fire detector units. Cargo must be placed at least 4 cm away from fire detectors. For other loading arrangements, coordinate with Commander.

UNCONTROLLED DOCUMENT
UNCONTROLLED DOCUMENT

UNCONTROLLED DOCUMENT (25 JUNE 2024 16:55:36)

14. Loading and Un-loading - Large Cargo Door Configuration

Risk of Tail-tipping

14.1 Large Cargo Door Configuration (SELIS, SELIP, and SELJY)

14.1.1 Un-Loading Sequence

Observe the following rules to prevent tail-tipping

Observe the following rules to prevent tail-tipping. Valid for Large cargo door config. This version has 7 compartments plus an extra shelf allowing max 100kg (comp 8)

Unload the cargo in the following sequence:

- Unload Compartments 1 through 7 via main cargo door.
- Use counterweights in compartment 1 during un-loading (Only necessary if index during Un-loading sequence is above 120. This is to avoid tail tipping, stay under 120 during the entire un-loading process)

14.1.2 Loading Sequence

Observe the following rules to prevent tail-tipping

Observe the following rules to avoid tail tipping. Valid for Large cargo door config.

Load the cargo in the following sequence.

- Load compartment 7 through 1 via main cargo door. (Note: The shelf/Comp 8 only to be used if it can be assured that cargo in section does not shift during flight)
- Use counterweights in compartment 1 during loading, to keep index below 120 during the entire loading process. (Only necessary if index is exceeding 120 during loading).

Do not block the fire detector units. Cargo must be placed at least 4 cm away from fire detectors. For other loading arrangements, coordinate with Commander.

14.2 Standard Cargo Door Configuration (SEMFD and SEMFB)

14.2.1 Un-Loading Sequence

Observe the following rules to prevent tail-tipping. Valid for Std cargo door config. This version has 6 compartments plus an extra shelf allowing max 170kg (comp 7)

Unload the cargo in the following sequence:

- Step 1: Unloading Compartment 1 (via main L/H entrance door) first is allowed if flight crew approve Index change before un-load.
- Step 2: Unload compartment 2 via fwd L/H and 6 via aft R/H at the same time. Use counterweights in compartment 1 during un-loading, to keep index below 120 during the entire un-loading process. (Only necessary if index is exceeding 120 during un-loading)
- Step 3: Unload compartment 3 via fwd L/H and compartment 5 via aft R/H simultaneously.
- Step 4: Unload compartment 4 via fwd L/H.

UNCONTROLLED DOCUMENT
UNCONTROLLED DOCUMENT

UNCONTROLLED DOCUMENT (25 JUNE 2024 16:55:36)

Note: SABLE doesn't show the loading index except on the finished Load Sheet. Ground staff shall coordinate loading/un-loading with flight crew if there are concerns about loading sequence or limitations during loading.

14.2.2 Loading Sequence

Observe the following rules to avoid tail tipping. Use counterweights in compartment 1 during loading, to keep index below 120 during the entire loading process. (Only necessary if index is exceeding 120 during loading)

Load the cargo in the following sequence.

- Step 1: Load compartment 4 via main L/H entrance door.
- Step 2: Load compartment 3 via fwd L/H and 5 via aft R/H at the same time.
- Step 3: Load compartment 2 via fwd L/H and 6 via aft R/H at the same time.
- Step 4: Load compartment 1 via fwd L/H

14.3 Loading Notes

14.3.1 Tail-tipping

The F-50F is **susceptible to tail-tipping**, and the outmost care must be taken whilst un-loading and loading the aircraft to prevent the Centre of Gravity moving to a position that would result in tail-tipping. Following the prescribed un-loading and loading sequence is therefore of paramount importance.

14.3.2 Un-loading and Loading through Main Cargo Door only

Loading through the main cargo door only is allowed, **but only if sufficient counter-ballast is kept in Compartment 1** during un-loading and loading to prevent tail-tipping.

14.3.3 Tail-stand

Tail-stand must be compulsorily installed above max. Index 125

14.3.4 Instructions for securing Aircraft

If no technician or flight crew personnel are present, ground crews are requested to secure the aircraft after offloading. Ensure the following items are completed before leaving the aircraft.

UNCONTROLLED DOCUMENT
UNCONTROLLED DOCUMENT

UNCONTROLLED DOCUMENT (25 JUNE 2024 16:55:36)

1. GND handling switch is in off position (Left side wall, in entrance to flight deck)



2. Cargo area lights are turned off (Left side wall panel before entry to flight deck)



2. Ensure all cargo doors are closed.
3. Chocks on nose wheel and at least one main wheel.
4. Turn off ground power unit and remove the cable from the aircraft.

UNCONTROLLED DOCUMENT
UNCONTROLLED DOCUMENT

UNCONTROLLED DOCUMENT (25 JUNE 2024 16:55:36)

UNCONTROLLED DOCUMENT

15. Rigid, Oversized and Special Loads

15.1 Aircraft Engines

This aircraft type does not support the carriage of aircraft engines.

15.2 Live Animals

15.2.1 Horses

This aircraft type does not support the carriage of horses.

15.2.2 Other Live Animals

The following table provides a list of commonly transported animals. If there is a requirement to transport animals not listed below, contact the operator for more information.

	Cabin
Day-old chickens	Yes
Dogs or Cats	
Small Mammals or Birds	
Tropical Fish	
Reptiles or Amphibians	
Eels	
Crustaceans or Molluscs	
Insects	
Hatching eggs	

UNCONTROLLED DOCUMENT

UNCONTROLLED DOCUMENT

UNCONTROLLED DOCUMENT (25 JUNE 2024 16:55:36)

UNCONTROLLED DOCUMENT

16. Restricted Commodities Loading

16.1 Loading Restrictions

Load Dangerous Goods as per the following chart:

Class	Compartment
2.1, 3, 4, 5.1, 8	1
2.2, 2.3, 5.2, 6, 7	7
9	All*

* Check additional restrictions in the following sections

16.2 Radioactive (RRY), Magnetised (MAG) and Cargo Aircraft Only (CAO)

The following Dangerous Good type loading restrictions apply. The Dangerous Good type can be loaded on positions marked with a 'Y'. The Dangerous Good type cannot be loaded on positions marked with a 'N'.

	Position						
DG Type	1	2	3	4	5	6	7
MAG	N	N	N	N	N	N	Y
CAO	Y	N	N	N	N	N	N
RRY (Class 7)Max. T.I. 50.0	N	N	N	N	N	N	Y

Notes: CAO packages must be properly secured and loaded visible and accessible to crew during flight. See **16.6 - Environmentally Hazardous Material (CAO)** for further restriction.

16.3 Dry Ice

Please see the Global Supplementary Operational Document **Dry Ice Consolidation table** for the current maximum allowed Dry Ice limits.

16.4 Dry Ice (ICE) and Live Animals (AVI)

There is no additional weight limit for the loading of Dry Ice (ICE) together with Live Animals (AVI).

When loading AVI and ICE together in the main-deck, **keep a minimum distance of one loading compartment, and load AVI forward of ICE.**

Load AVI higher than ICE.

16.5 Lithium Batteries

Please see the Global Supplementary Operational Document **Lithium Battery Loadability Consolidation Table** for the current UN3480 Section IA/IB (RBI), UN3090 Section IA/IB (RBM), UN3481 Section I (RLI), UN3091 Section I (RLM) load ability limits.

16.6 Environmentally Hazardous Material (CAO)

Dangerous Goods classified as 2.2, 5.2, 6.1 and 6.2 shall be loaded in **Compartment 7 only.**

UNCONTROLLED DOCUMENT (25 JUNE 2024 16:55:36)

UNCONTROLLED DOCUMENT

17. Messaging and Reporting

17.1 Messaging

Standard messaging rules apply.

17.2 Reporting

Standard messaging rules apply.

UNCONTROLLED DOCUMENT

UNCONTROLLED DOCUMENT

UNCONTROLLED DOCUMENT (25 JUNE 2024 16:55:36)

UNCONTROLLED DOCUMENT

18. Load Control Data

18.1 Mass and Index Information

All weights below are in Kilograms (kg)

A/C Registration	DOM	DOI	MZFM	MTOM	MLAM
SE-LIS	11870	25	18.900	20.820	20.030
SE-LIP	11804	27			
SE-LJV	11857	28			
SE-LJY	11724	26			
SE-LFS (LCD)	11902	26			
SE-MFB	11830	26			
SE-MFD	11853	27			
SE-MFJ (LCD)	11881	24			

Note: LCD noted within brackets means aircraft is equipped with large cargo door

18.2 Standard Mass Additions

18.2.1 Additional Crew Members (ACM)

Maximum Number of ACMs: 1
Mass of ACM: 85 kg

18.2.2 Fly Away Kit (FAK) and Ballast

Fly Away Kit (FAK): N/A

UNCONTROLLED DOCUMENT (25 JUNE 2024 16:55:36)

UNCONTROLLED DOCUMENT

18.3 Minimum Fuel and Standard Taxi Fuel

Minimum Fuel:	N/A
Standard Taxi Fuel:	50 kg

18.4 LMC Restrictions

EDP Load-sheet	N/A
Manual Load-sheet	N/A

UNCONTROLLED DOCUMENT

UNCONTROLLED DOCUMENT

UNCONTROLLED DOCUMENT (25 JUNE 2024 16:55:36)

UNCONTROLLED DOCUMENT

19. Maximum Package Dimensions

Use these drawings to determine maximum package dimensions. All dimensions in millimetres.

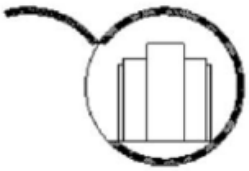

FREIGHT DOOR
OPENED TO 110 DEGREES

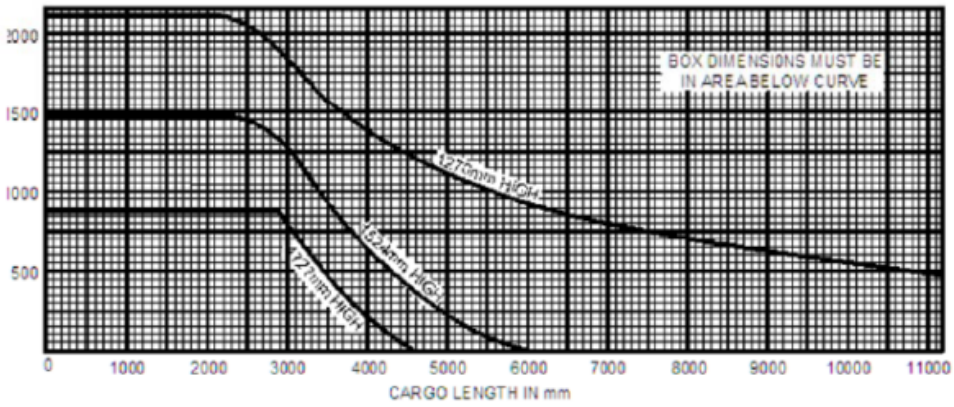

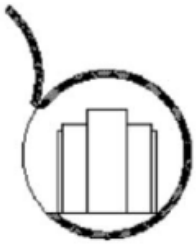

FREIGHT DOOR
OPENED TO 170 DEGREES

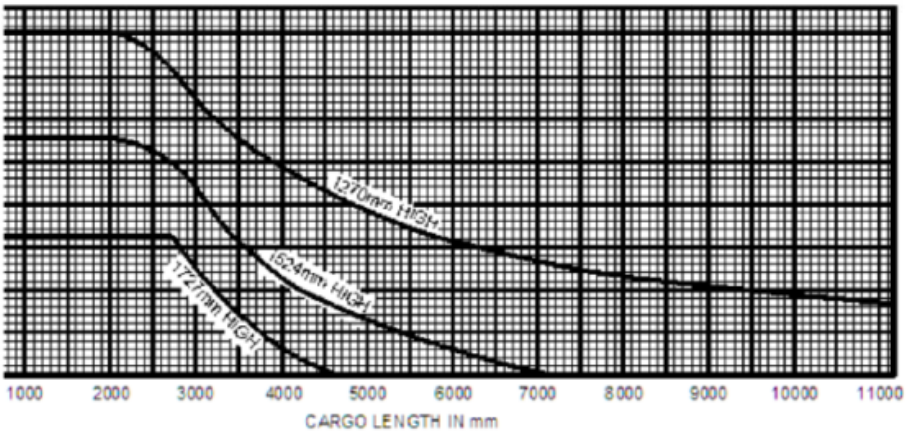

UNCONTROLLED DOCUMENT (25 JUNE 2024 16:55:36)