UNCONTROLLED DOCUMENT



GTI/PAC B748F
Atlas Air / Polar Air Cargo B747-8F

Revision: 6
Date: 27 November 2024

1 Atlas Air / Polar Air Cargo B747-8F Registrations
2 Aircraft Dimensions
3 Aircraft Servicing Points and Specifications
4 Ground Support Equipment
5 Standard Turnaround Times
6 Safety Areas
7 Strong Wind Conditions
8 Aircraft Door Dimensions
9 Compartment Classification and Air-Conditioning
10 Aircraft Cabin Contour Dimensions
11 Maximum Position Weights
12 Aircraft ULD Compatibility
13 Loading and Un-Loading
14 Rigid, Oversized and Special Loads
15 Restricted Commodities Loading
16 Messaging and Reporting
17 Load Control Data
18 Maximum Package Dimensions

UNCONTROLLED DOCUMENT

UNCONTROLLED DOCUMENT

Page	Date	Comment
22	27 November 2024	ULD types no longer available in the DHL network, removed. *(Minor)*

UNCONTROLLED DOCUMENT

UNCONTROLLED DOCUMENT

UNCONTROLLED DOCUMENT

1. Atlas Air / Polar Air Cargo B747-8F Registrations

IATA Designator:	**5Y/PO**
ICAO Designator:	**GTI/PAC**
Valid for:	**N850GT, N851GT, N852GT, N853GT, N854GT, N855GT, N856GT, N857GT, N858GT, N859GT.**

UNCONTROLLED DOCUMENT

UNCONTROLLED DOCUMENT

UNCONTROLLED DOCUMENT (27 NOVEMBER 2024 11:40:38)

2. Aircraft Dimensions

All dimensions in Meters and Feet/Inches.

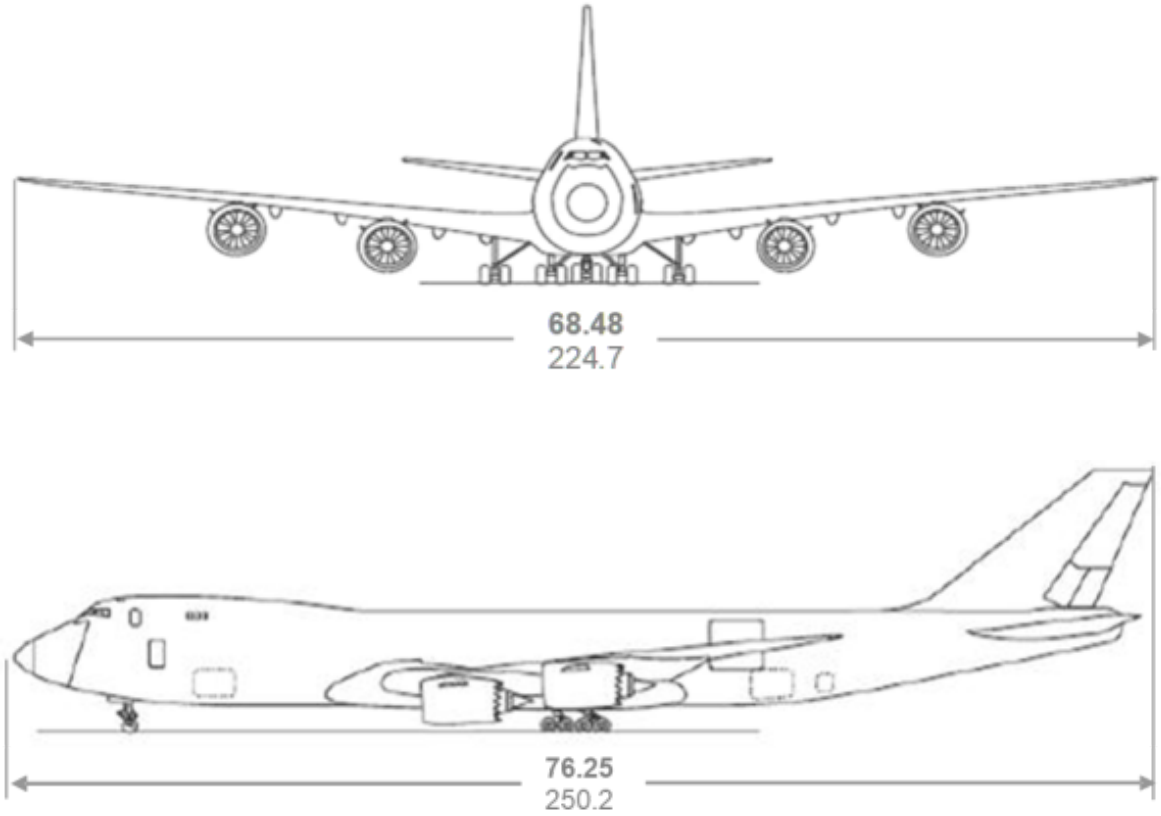

UNCONTROLLED DOCUMENT
UNCONTROLLED DOCUMENT

UNCONTROLLED DOCUMENT (27 NOVEMBER 2024 11:40:38)

UNCONTROLLED DOCUMENT

3. Aircraft Servicing Points and Specifications

3.1 Servicing Points

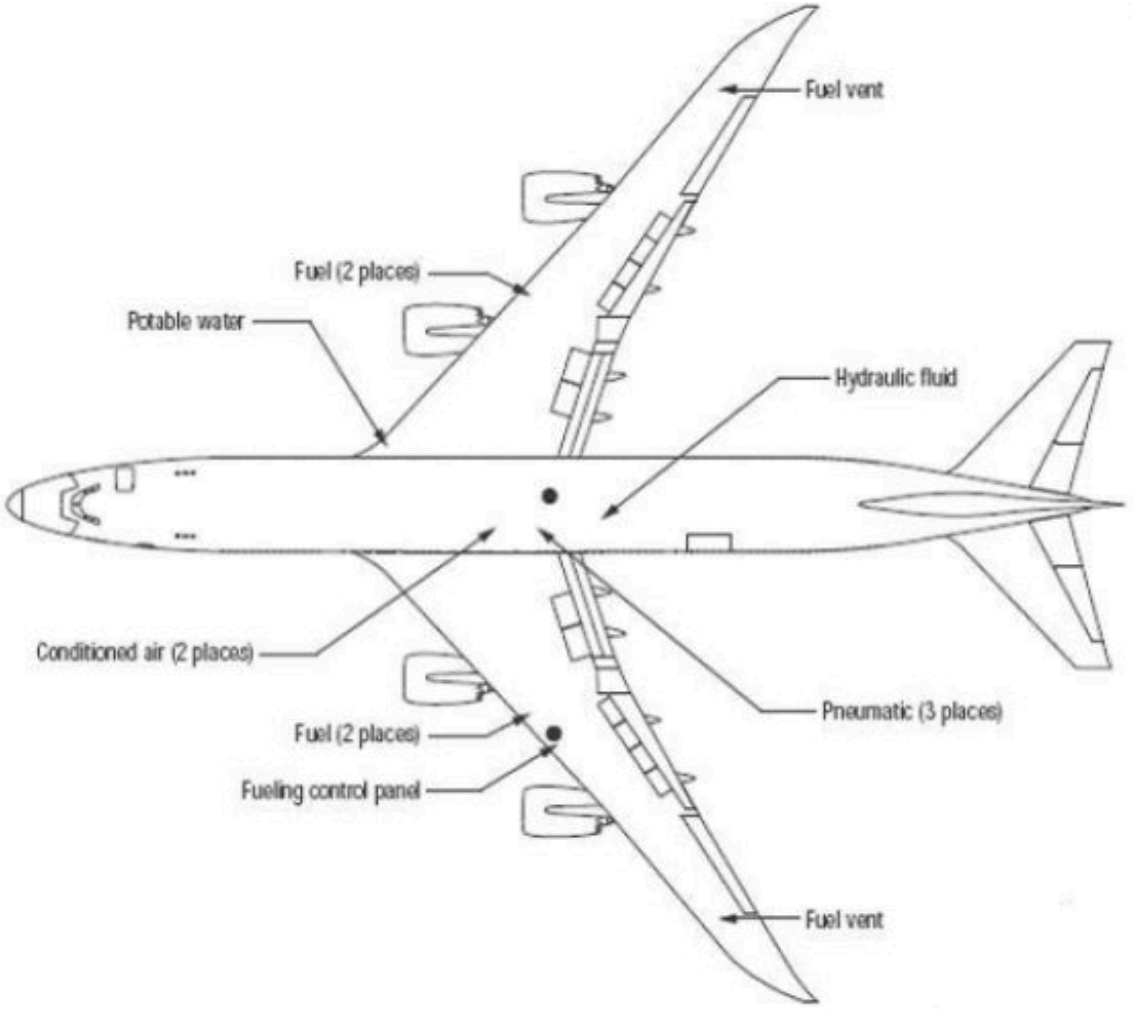

3.2 Servicing Specifications

System	Requirements	Notes
Ground Power Unit	115/125V AC / 90 kVA / 400 Hz	2 GPU connections required (2 x 90 kVA)
Fuel	Jet A1	Fuel control panel on **LH wing only**
Air Condition Unit	Maximum Flow Rate 700 ppm	2 ACU inlets available
Air Start Unit	Minimum Capacity 240 ppm Max. / Min. pressure 35 / 45 psi	2 ASU inlets available. 2 ASUs may be required, depending on flow rate and ambient air temperature.

UNCONTROLLED DOCUMENT (27 NOVEMBER 2024 11:40:38)

UNCONTROLLED DOCUMENT

4. Ground Support Equipment

4.1 Positioning of GSE

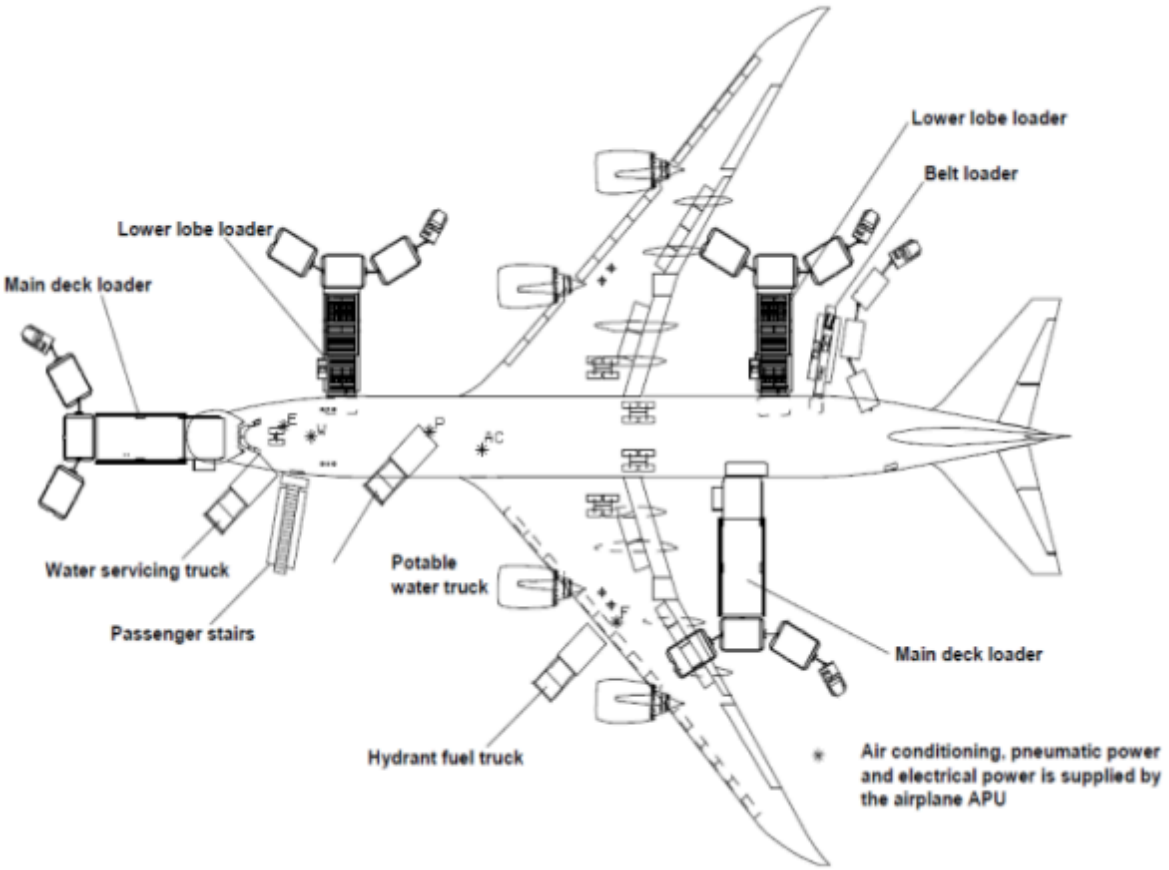

4.2 GSE Requirements

GSE	Type	Quantity
High Loader	Main-deck Standard	1 or 2* 2
Crew stairs	Platform height 4.65 – 5.36 meters	1
Ground Power Unit	Diesel, Electric or Ground-Power	1
Belt Loader	Standard (9 meter recommended)	1
Tractor	N/A	6
Dolly Wagon Main-deck	125/88” and 125/96” capable	Up to 34
	16 & 20ft capable	Up to 19
Dolly Wagon Lower-deck	125/88” and 125/96” capable	Up to 10
	60.4/61.5” or 60.4/125” capable	Up to 9
Belly Container / Wagon	As required	According to load
Nose Tether	As available at local station	1

* 2 Main-deck loaders required if loading/un-loading via both the side-cargo door and the nose-door.

UNCONTROLLED DOCUMENT (27 NOVEMBER 2024 11:40:38)

5. Standard Turnaround Times

Turn-around time for a transit stop: 01:30 hour (partial off- and on-load)
Turn-around time for an end stop: 02:20 hour (full off- and on-load)

Notes: Tech stops are not within the scope of the above timings.

Deviations from the above timings are possible, but only when in agreement with the operator.

UNCONTROLLED DOCUMENT
UNCONTROLLED DOCUMENT

UNCONTROLLED DOCUMENT (27 NOVEMBER 2024 11:40:38)

6. Safety Areas

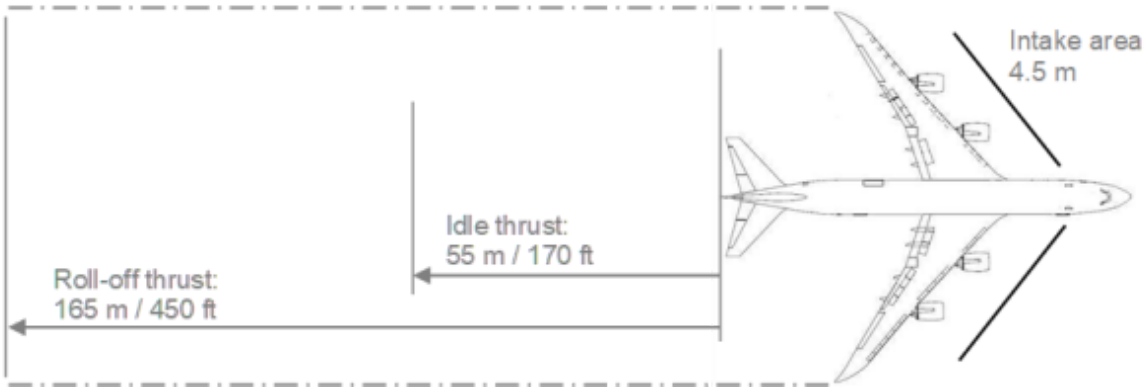

UNCONTROLLED DOCUMENT
UNCONTROLLED DOCUMENT

UNCONTROLLED DOCUMENT (27 NOVEMBER 2024 11:40:38)

7. Strong Wind Conditions

If the wind conditions on the ramp reach the following speeds, the corresponding actions shall be taken.

Wind Speed	Action
Up to 40 knots	Normal Operations: All doors can be opened and left open
More than 40 knots	Do not open additional doors
More than 65 knots	All open doors shall be closed immediately

UNCONTROLLED DOCUMENT
UNCONTROLLED DOCUMENT

UNCONTROLLED DOCUMENT (27 NOVEMBER 2024 11:40:38)

UNCONTROLLED DOCUMENT

8. Aircraft Door Dimensions

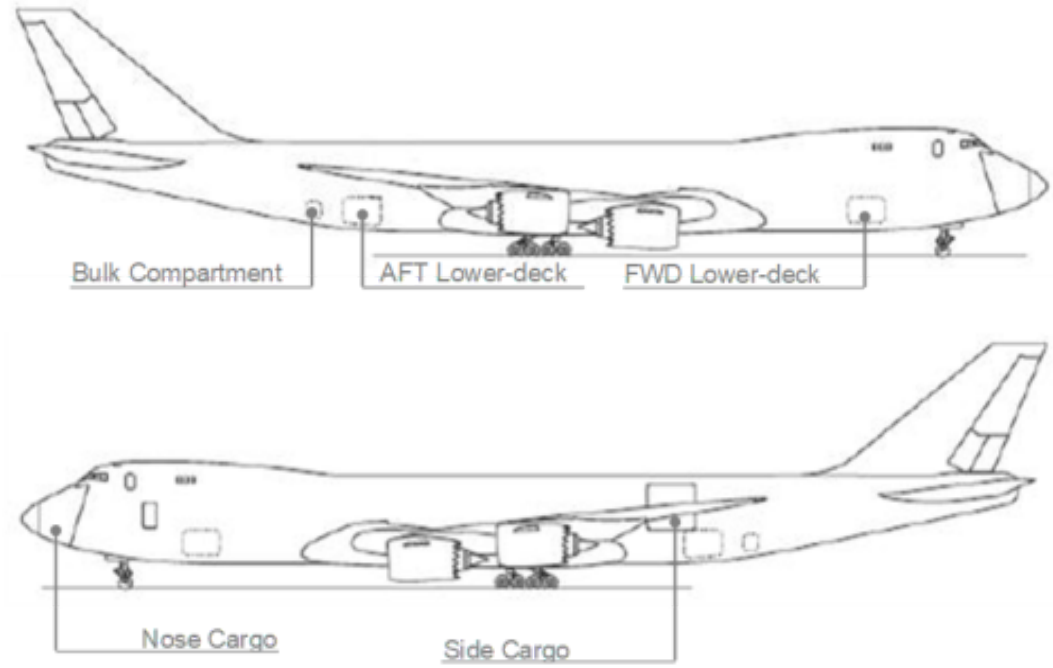

Door width, height, and sill height for Main-deck Side-Cargo Door (SCD) and Main-deck Nose-Cargo Door (NCD):

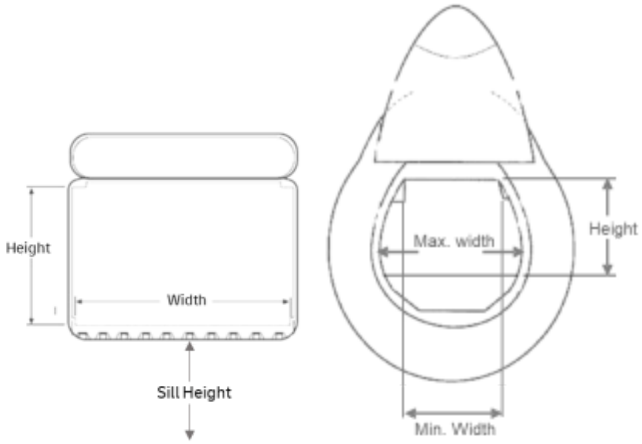

All dimensions are in centimetres cm and inches (in).

Door	Door Width	Door Height	Min. Door Sill Height	Max. Door Sill Height
Crew Door (1L)	-	-	480 (189)	541 (213)
Main Deck SCD	341 (134)	310 (122)	488 (192)	526 (207)
Main-Deck NCD	264(104)/325 (128)	249 (98)	472 (186)	546 (215)
Forward Hold	264 (104)	168* (66*)	277 (109)	330 (130)
Aft Hold	264 (104)	168* (66*)	277 (109)	323 (127)
Bulk Hold	111 (44)	119 (47)	292 (115)	345 (136)

*The maximum height for a lower-deck ULD is 163 cm (64”).

UNCONTROLLED DOCUMENT (27 NOVEMBER 2024 11:40:38)

9. Compartment Classification and Air-Conditioning

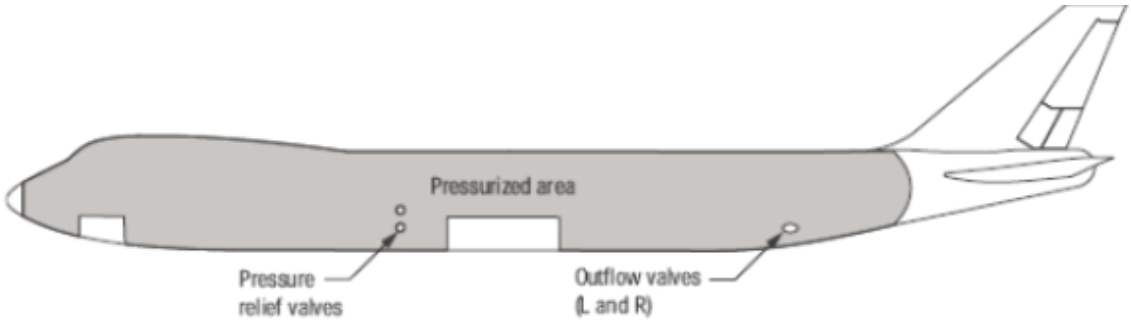

9.1 Compartment Classification

Compartment	Features
Main-deck	- Classification **B**
	- Pressurisation
	- Smoke Detection
	- **Accessible** during flight (except pos. X)
Lower-deck Compartments 1, 2, 3, 4 and 5	- Classification **C**
	- Pressurisation
	- Smoke Detection
	- **In-accessible** during flight
	- Fire Suppression

9.2 Air-Conditioning

	Main-deck	Forward Hold	Aft Hold	Bulk
Temperature	5C to 30C (41F – 86F)	16C to 20C (61F – 68F)	16C to 20c (61F – 68F)	Around 18C (64F)
Heating	Yes			Indirect from aft hold
Head adjust	Yes	No		
Cooling	Yes	No		
Ventilation	Yes	Limited		

UNCONTROLLED DOCUMENT (27 NOVEMBER 2024 11:40:38)

10. Aircraft Cabin Contour Dimensions

The aircraft is divided into five contour zones: CI, CII, CIII, CIV and CV

10.1 Contour CI (A1&A2)

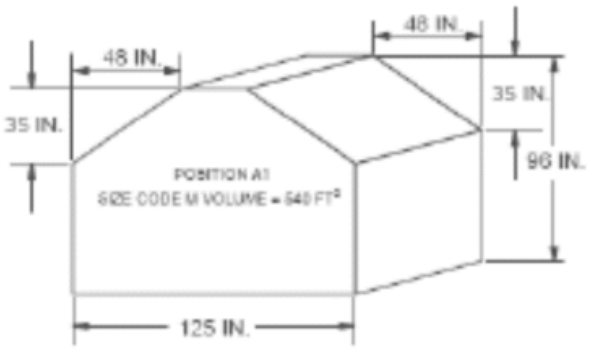

No option to load 125/88 ULDs on this position

10.2 Contour CII (B)

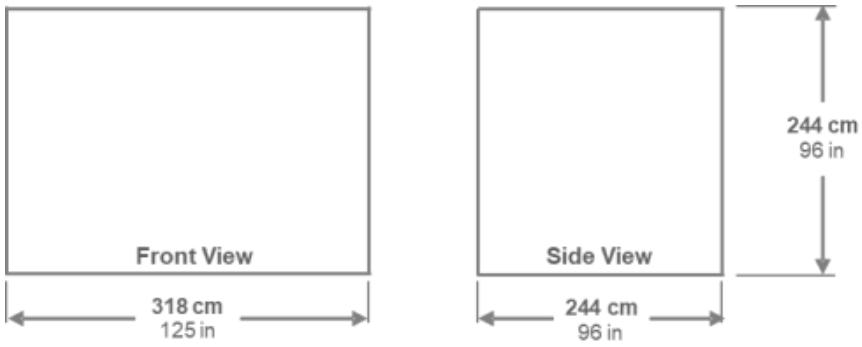

No option to load 125/88 ULDs on this position

10.3 Contour CIII (C-D L/R)

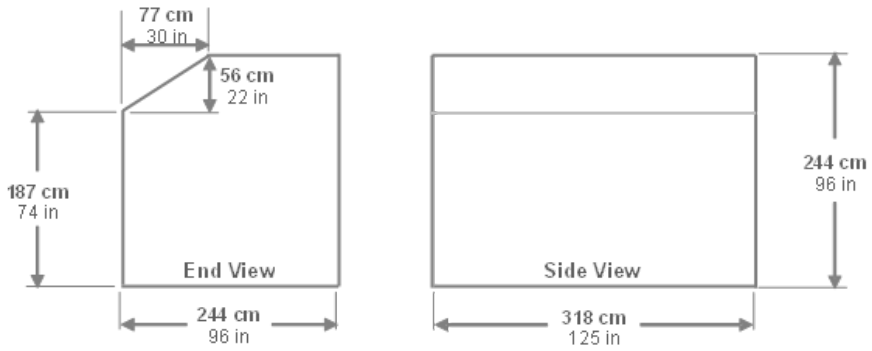

This contour is also valid for 88” ULDs (223 cm side view)

UNCONTROLLED DOCUMENT (27 NOVEMBER 2024 11:40:38)

UNCONTROLLED DOCUMENT

10.4 Contour IV (E-G R/L and RL)

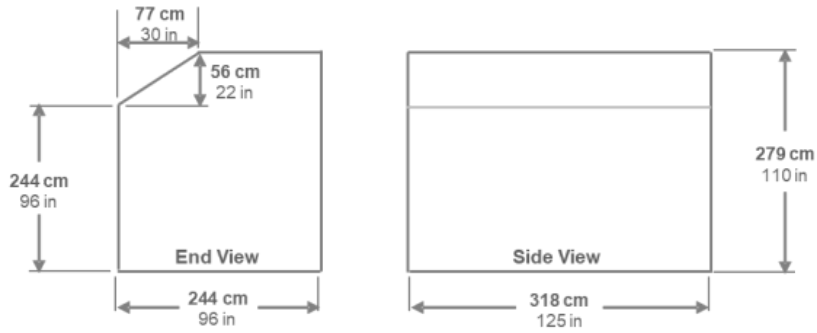

This contour is also valid for 88” ULDs (223 cm side view)

This contour is also valid for pallets **16ft and 20ft** in length (side view) loaded longitudinally twin-track

10.5 Contour V (H-U L/R and X)

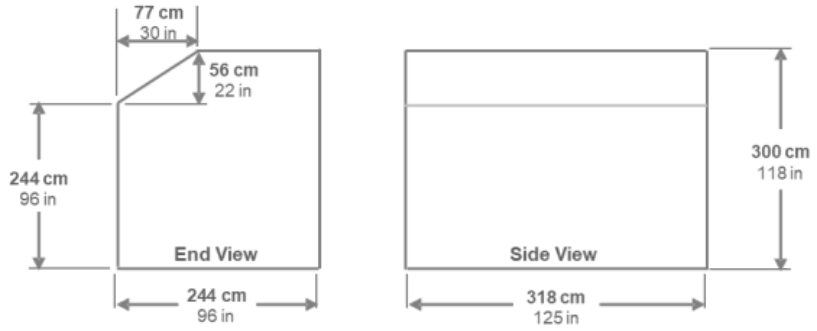

Max height for door position (PL) is 287cm

This contour is also valid for 88” ULDs (223 cm side view)

This contour is also valid for pallets 16ft and 20ft in length (side view) loaded longitudinally

10.6 16ft Lateral Pallets (R1-R19)

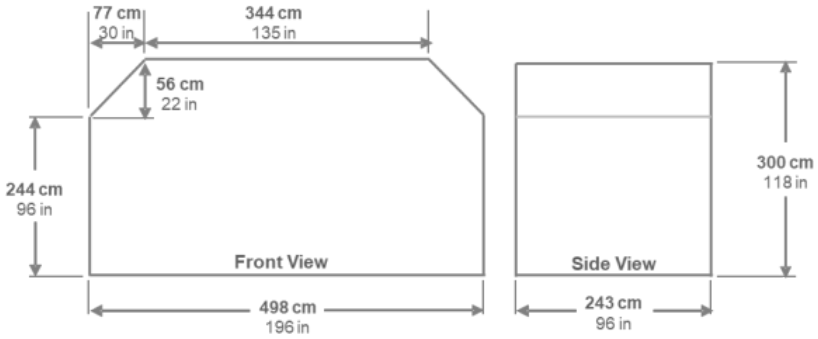

Max. height for positions R1 thru R3 is 244 cm (96 in)

Max. height for positions R4 thru R5 is 279 cm (110 in)

UNCONTROLLED DOCUMENT (27 NOVEMBER 2024 11:40:38)

UNCONTROLLED DOCUMENT

11. Maximum Position Weights

11.1 Maximum Main-deck ULD Weights

Maximum Main-deck Weights in Kilograms

	ULD Position																			
ULD Size	**A1**	**A2**	**B**	**C**	**D**	**E**	**F**	**G**	**H**	**J**	**K**	**L**	**M**	**P**	**Q**	**R**	**S**	**T**	**U**	**X**
88" Twin-track				4851					8284			4851								3400
96" Twin-track	3734																			
ULD Size				CD	DE	EF	FG	GH	HJ	JK	KL	LM	MP	PR	ST	TU				
16ft or 20 ft Twin-track				12321		16556			30466		16556				12321	31612				
ULD Size				CD	DE	EF	FG	GH	HJ	JK	KL	LM	MP	PR	ST	TU				
20ft centre-line				18388					28842		18388									
ULD Size	R1	R2	R3	R4	R5	R6	R7	R8	R9	R10	R11	R12	R13	R14	R15	R16	R17	R18	R19	
16ft Lateral	7400							12624				7400								

Maximum Main-deck Weights in Pounds

	ULD Position																			
ULD Size	**A1**	**A2**	**B**	**C**	**D**	**E**	**F**	**G**	**H**	**J**	**K**	**L**	**M**	**P**	**Q**	**R**	**S**	**T**	**U**	**X**
88" Twin-track				10695					18263			10695								7496
96" Twin-track	8232																			
ULD Size				CD	DE	EF	FG	GH	HJ	JK	KL	LM	MP	PR	ST	TU				
16ft or 20 ft Twin-track				27165		36500			67166		36500				27165	31612				
ULD Size				CD	DE	EF	FG	GH	HJ	JK	KL	LM	MP	PR	ST	TU				
20ft centre-line				40539					63586		40539									
ULD Size	R1	R2	R3	R4	R5	R6	R7	R8	R9	R10	R11	R12	R13	R14	R15	R16	R17	R18	R19	
16ft Lateral	16316							27831				16316								

11.2 Maximum Lateral Unsymmetrical Load

Maximum Lateral Unsymmetrical Load in Kilograms

	ULD Positions			
	CL&CR thru GL&GR	HL&HR thru KL&KR	LL&LR thru TL&TR	UL&UR
Max Weight	11428	16568	11428	9714

Maximum Lateral Unsymmetrical Load in Pounds

	ULD Positions			
	CL&CR thru GL&GR	HL&HR thru KL&KR	LL&LR thru TL&TR	UL&UR
Max Weight	25194	36526	25194	21415

UNCONTROLLED DOCUMENT (27 NOVEMBER 2024 11:40:38)

UNCONTROLLED DOCUMENT

UNCONTROLLED DOCUMENT

11.3 Maximum Lower-deck Compartment Weights

Forward Hold in Kilograms

Compt.	Position	Max Gross Weight per ULD				Max. Hold capacity
		88"/125"	96"/125"	60.4"/61.5" (AKE)	60.4"/125" (ALP)	
1	11P - 12P	4626	5035			35,244
	11L/R - 13L/R			1587	3175	
2	21P - 25P	4626	5035			
	21 L/R - 28 L/R			1587	3175	

Forward Hold in Pounds

Compt.	Position	Max Gross Weight per ULD				Max. Hold capacity
		88"/125"	96"/125"	60.4"/61.5" (AKE)	60.4"/125" (ALP)	
1	11P - 12P	10200	11100			77.700
	11L/R - 13L/R			3500	7000	
2	21P - 25P	10200	11100			
	21 L/R - 28 L/R			3500	7000	

Aft Hold in Kilograms

Compt.	Position	Max Gross Weight per ULD				Max. Hold capacity
		88"/125"	96"/125"	60.4"/61.5" (AKE)	60.4"/125" (ALP)	
3	31P - 33P	4626	5035			28.576
	31L/R - 34L/R			1587	3175	
4	41P - 42P	4626	5035			
	41L/R - 45L/R			1587	3175	

Aft Hold in Pounds

Compt.	Position	Max Gross Weight per ULD				Max. Hold capacity
		88"/125"	96"/125"	60.4"/61.5" (AKE)	60.4"/125" (ALP)	
3	31P - 33P	10200	11100			63.000
	31L/R - 34L/R			3500	7000	
4	41P - 42P	10200	11100			
	41L/R - 45L/R			3500	7000	

UNCONTROLLED DOCUMENT (27 NOVEMBER 2024 11:40:38)

UNCONTROLLED DOCUMENT

11.4 Bulk Hold

(Compartment 5) in Kilograms

Compt.	Volume (m3)	Max floor load (kg/m2)	Max Weight
52	14,52	730	1905
53			1469
54			1034

(Compartment 5) in Pounds

Compt.	Volume (cu.ft)	Max floor load (lbs/sq.ft)	Max Weight
52	498	(?)	4200
53			3240
54			2280

UNCONTROLLED DOCUMENT

UNCONTROLLED DOCUMENT

UNCONTROLLED DOCUMENT (27 NOVEMBER 2024 11:40:38)

12. Aircraft ULD Compatibility

12.1 Main Deck Configurations

The loading combinations shown here are examples only. More combinations are possible. Full information covering possible loading combinations, and how they interact, can be found in the Sable system.

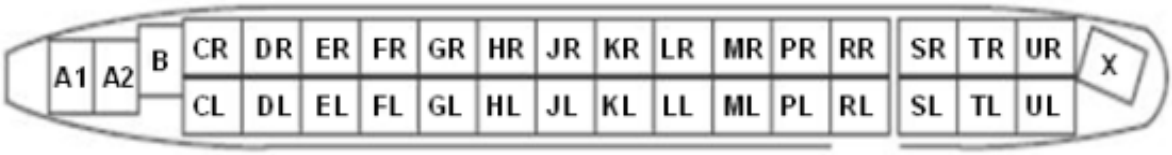

Configuration 1: 4 Centre-line and 30 Twin-track 125”/96” or 125”/88” positions

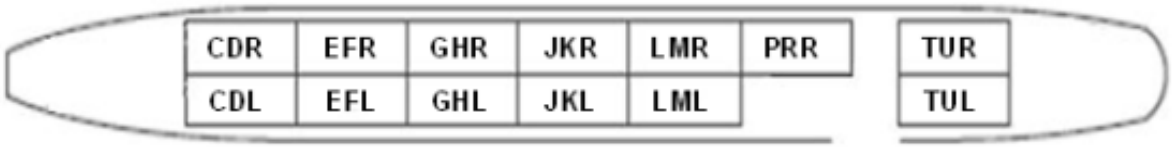

Configuration 2a: 13 Longitudinal Twin-track 16 or 20ft positions



Configuration 2b: 13 Longitudinal Twin-track 16 or 20ft positions

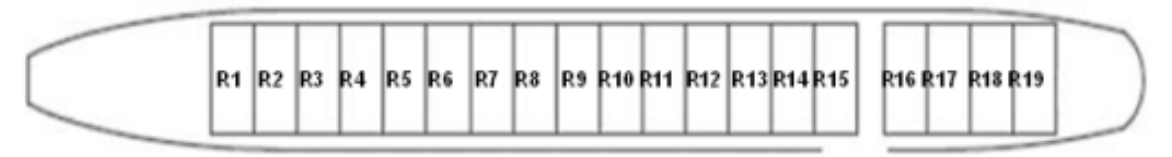

Configuration 3: 19 Lateral 16ft positions

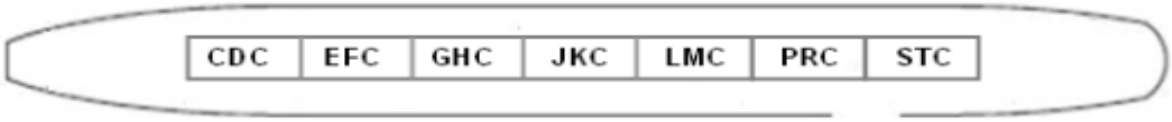

Configuration 4a: 7 Longitudinal centre-line 16 or 20ft positions

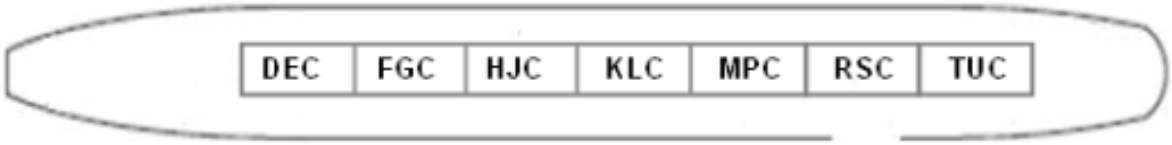

Configuration 4b: 7 Longitudinal centre-line 16 or 20ft positions

UNCONTROLLED DOCUMENT
UNCONTROLLED DOCUMENT

UNCONTROLLED DOCUMENT (27 NOVEMBER 2024 11:40:38)

12.2 Main Deck ULD Compatibility

The following ULD type loading restrictions apply. The ULD type can be loaded on positions marked with a 'Y'. The ULD type cannot be loaded on positions marked with a 'N'.

		ULD Type																	
	Pos	AAA	AAC/ LAY	AAJ/ LAK	AAM	AAX	AGA	AMA	AMD	AMH	AMJ	AML	AMP	AMX	HMJ	PAG	PMC	PGE	PRA	PZA
Configuration 1	A1	N	N	N	N	N	N	N	N	N	N	N	Y	N	N	N	Y1	N	N	N
	A2	N	N	N	N	N	N	N	N	N	N	N	Y	N	N	N	Y1	N	N	N
	B1	N	N	N	N	N	N	Y	N	Y	Y	N	Y	N	Y	N	Y1	N	N	N
	CL/R	Y	Y	Y	Y	Y	N	Y	N	Y	Y	N	Y	N	Y	Y1	Y1	N	N	N
	DL/R	Y	Y	Y	Y	Y	N	Y	N	Y	Y	N	Y	N	Y	Y1	Y1	N	N	N
	EL/R	Y	Y	Y	Y	Y	N	Y	Y	Y	Y	Y	Y	Y	Y	Y	Y	N	N	N
	FL/E	Y	Y	Y	Y	Y	N	Y	Y	Y	Y	Y	Y	Y	Y	Y	Y	N	N	N
	GL/R	Y	Y	Y	Y	Y	N	Y	Y	Y	Y	Y	Y	Y	Y	Y	Y	N	N	N
	HL/R	Y	Y	Y	Y	Y	N	Y	Y	Y	Y	Y	Y	Y	Y	Y	Y	N	N	N
	JL/R	Y	Y	Y	Y	Y	N	Y	Y	Y	Y	Y	Y	Y	Y	Y	Y	N	N	N
	KL/R	Y	Y	Y	Y	Y	N	Y	Y	Y	Y	Y	Y	Y	Y	Y	Y	N	N	N
	LL/R	Y	Y	Y	Y	Y	N	Y	Y	Y	Y	Y	Y	Y	Y	Y	Y	N	N	N
	ML/R	Y	Y	Y	Y	Y	N	Y	Y	Y	Y	Y	Y	Y	Y	Y	Y	N	N	N
	PL/R	Y	Y	Y	Y	Y	N	Y	Y	Y	Y	Y	Y	Y	Y	Y	Y	N	N	N
	RL/R	Y	Y	Y	Y	Y	N	Y	Y2	Y	Y	Y	Y	Y	Y	Y3	Y3	N	N	N
	SL/R	Y	Y	Y	Y	Y	N	Y	Y	Y	Y	Y	Y	Y	Y	Y	Y	N	N	N
	TL/R	Y	Y	Y	Y	Y	N	Y	Y	Y	Y	Y	Y	Y	Y	Y	Y	N	N	N
	UL/R	Y	Y	Y	Y	Y	N	Y	Y	Y	Y	Y	Y	Y	Y	Y	Y	N	N	N
	X	Y	Y	Y	Y	Y	N	Y	Y	Y	Y	Y	Y	Y	Y	Y	Y	N	N	N
Configuration 2a	CDL/R	N	N	N	N	N	Y	N	N	N	N	N	N	N	N	N	N	Y1	Y1	Y1
	EFL/R	N	N	N	N	N	Y	N	N	N	N	N	N	N	N	N	N	Y	Y	Y
	GHL/R	N	N	N	N	N	Y	N	N	N	N	N	N	N	N	N	N	Y	Y	Y
	JKL/R	N	N	N	N	N	Y	N	N	N	N	N	N	N	N	N	N	Y	Y	Y
	LML/R	N	N	N	N	N	Y	N	N	N	N	N	N	N	N	N	N	Y	Y	Y
	PRR	N	N	N	N	N	Y	N	N	N	N	N	N	N	N	N	N	Y	Y	Y
	TUL/R	N	N	N	N	N	Y	N	N	N	N	N	N	N	N	N	N	Y	Y	Y
Configuration 2b	DEL/R	N	N	N	N	N	Y	N	N	N	N	N	N	N	N	N	N	Y1	Y1	Y1
	FGL/R	N	N	N	N	N	Y	N	N	N	N	N	N	N	N	N	N	Y	Y	Y
	HJL/R	N	N	N	N	N	Y	N	N	N	N	N	N	N	N	N	N	Y	Y	Y
	KLL/R	N	N	N	N	N	Y	N	N	N	N	N	N	N	N	N	N	Y	Y	Y
	MPL/R	N	N	N	N	N	Y	N	N	N	N	N	N	N	N	N	N	Y	Y	Y
	RSR	N	N	N	N	N	Y	N	N	N	N	N	N	N	N	N	N	Y	Y	Y
	TUL/R	N	N	N	N	N	Y	N	N	N	N	N	N	N	N	N	N	Y	Y	Y

Y1: Max. Height of 2.44m (96 in)

Y2: AMD not allowed on RL

Y3: RL Max. Height of 2.87m (113in)

Note: On aircraft registration N859GT configuration 1, 125"/88" ULDs shall only be loaded on positions PR, PL, RR and RL.

UNCONTROLLED DOCUMENT (27 NOVEMBER 2024 11:40:38)

		ULD Type																	
	Pos	AAA	AAC/ LAY	AAJ/ LAK	AAM	AAX	AGA	AMA	AMD	AMH	AMJ	AML	AMP	AMX	HMJ	PAG	PMC	PGE	PRA	PZA
Configuration 3	R1	N	N	N	N	N	N	N	N	N	N	N	N	N	N	N	N	N	Y1	Y1
	R2	N	N	N	N	N	N	N	N	N	N	N	N	N	N	N	N	N	Y1	Y1
	R3	N	N	N	N	N	N	N	N	N	N	N	N	N	N	N	N	N	Y1	Y1
	R4	N	N	N	N	N	N	N	N	N	N	N	N	N	N	N	N	N	Y	Y
	R5	N	N	N	N	N	N	N	N	N	N	N	N	N	N	N	N	N	Y	Y
	R6	N	N	N	N	N	N	N	N	N	N	N	N	N	N	N	N	N	Y	Y
	R7	N	N	N	N	N	N	N	N	N	N	N	N	N	N	N	N	N	Y	Y
	R8	N	N	N	N	N	N	N	N	N	N	N	N	N	N	N	N	N	Y	Y
	R9	N	N	N	N	N	N	N	N	N	N	N	N	N	N	N	N	N	Y	Y
	R10	N	N	N	N	N	N	N	N	N	N	N	N	N	N	N	N	N	Y	Y
	R11	N	N	N	N	N	N	N	N	N	N	N	N	N	N	N	N	N	Y	Y
	R12	N	N	N	N	N	N	N	N	N	N	N	N	N	N	N	N	N	Y	Y
	R13	N	N	N	N	N	N	N	N	N	N	N	N	N	N	N	N	N	Y	Y
	R14	N	N	N	N	N	N	N	N	N	N	N	N	N	N	N	N	N	Y	Y
	R15	N	N	N	N	N	N	N	N	N	N	N	N	N	N	N	N	N	Y	Y
	R16	N	N	N	N	N	N	N	N	N	N	N	N	N	N	N	N	N	Y	Y
	R17	N	N	N	N	N	N	N	N	N	N	N	N	N	N	N	N	N	Y	Y
	R18	N	N	N	N	N	N	N	N	N	N	N	N	N	N	N	N	N	Y	Y
	R19	N	N	N	N	N	N	N	N	N	N	N	N	N	N	N	N	N	Y	Y
Configuration 4a	CDC	N	N	N	N	N	Y	N	N	N	N	N	N	N	N	N	N	Y1	Y1	Y1
	EFC	N	N	N	N	N	Y	N	N	N	N	N	N	N	N	N	N	Y	Y	Y
	GHC	N	N	N	N	N	Y	N	N	N	N	N	N	N	N	N	N	Y	Y	Y
	JKC	N	N	N	N	N	Y	N	N	N	N	N	N	N	N	N	N	Y	Y	Y
	LMC	N	N	N	N	N	Y	N	N	N	N	N	N	N	N	N	N	Y	Y	Y
	PRC	N	N	N	N	N	Y	N	N	N	N	N	N	N	N	N	N	Y	Y	Y
	STC	N	N	N	N	N	Y	N	N	N	N	N	N	N	N	N	N	Y	Y	Y
Configuration 4b	DEC	N	N	N	N	N	Y	N	N	N	N	N	N	N	N	N	N	Y1	Y1	Y1
	FGC	N	N	N	N	N	Y	N	N	N	N	N	N	N	N	N	N	Y	Y	Y
	HJC	N	N	N	N	N	Y	N	N	N	N	N	N	N	N	N	N	Y	Y	Y
	KLC	N	N	N	N	N	Y	N	N	N	N	N	N	N	N	N	N	Y	Y	Y
	MPC	N	N	N	N	N	Y	N	N	N	N	N	N	N	N	N	N	Y	Y	Y
	RSC	N	N	N	N	N	Y	N	N	N	N	N	N	N	N	N	N	Y	Y	Y
	TUC	N	N	N	N	N	Y	N	N	N	N	N	N	N	N	N	N	Y	Y	Y

Y1: Max. Height of 2.44m (96 in

20ft ULD Loading notes:

If 20ft ULDs are loaded over positions **E, J, P or U** they cover the pallet locks of the adjacent position, either forward or aft depending on the exact position of the 20ft ULD. It is then not possible to load 125”/88” or 125”/96” ULDs on the next position – either forward **or** aft.

UNCONTROLLED DOCUMENT

12.3 Lower Deck Configurations

The loading combinations shown here are examples only. More combinations are possible. Full information covering possible loading combinations, and how they interact, can be found in the Sable system.

12.3.1 Forward Hold

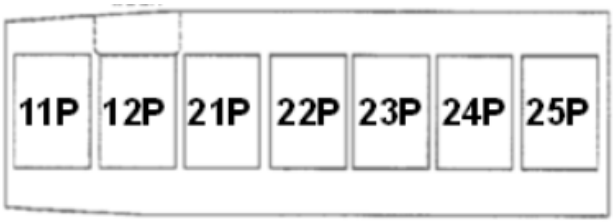

Configuration 1: 7 x Lateral 125”/88” or 125”/96” positions

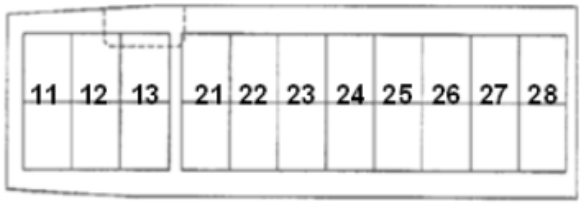

Configuration 2: 11 x Lateral 125”/60.4” positions

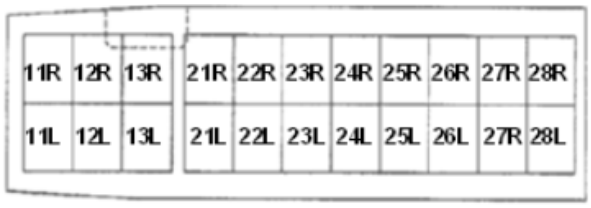

Configuration 3: 22 x Twin-track 61.5”/60.4” positions

UNCONTROLLED DOCUMENT

UNCONTROLLED DOCUMENT

UNCONTROLLED DOCUMENT (27 NOVEMBER 2024 11:40:38)

12.3.2 Aft Hold

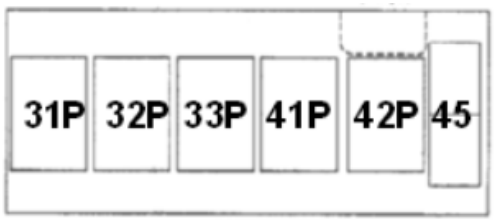

Configuration 1: 5 x Lateral 125”/88” or 96” and 1 x 125”/60.4” or 2 Twin-track 60.4”/61.5” positions

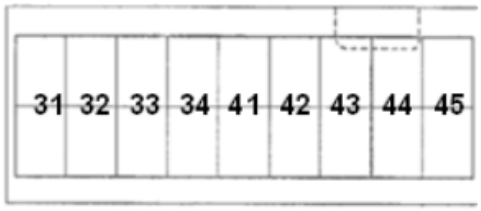

Configuration 2: 9 x Lateral 125”/60.4” positions

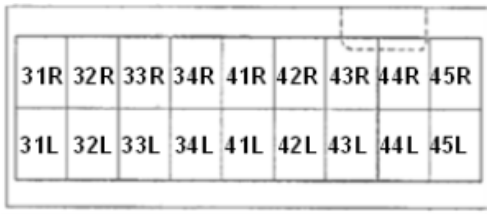

Configuration 3: 18 x Twin-track 61.5”/60.4” positions

UNCONTROLLED DOCUMENT
UNCONTROLLED DOCUMENT

UNCONTROLLED DOCUMENT (27 NOVEMBER 2024 11:40:38)

12.4 Lower Deck ULD Compatibility

The following ULD type loading restrictions apply. The ULD type can be loaded on positions marked with a 'Y'. The ULD type cannot be loaded on positions marked with a 'N'.

12.4.1 Forward Hold

		ULD Type										
	Pos	AAJ/ LAK	RAP	AMP	PAG	PMC	AKE	AVA	RKNe1	ALF	ALP	PLA/ PLW
FWD Configuration 1	11P	Y	Y	Y	Y	Y	N	N	N	N	N	N
	12P	Y	N	Y	Y	Y	N	N	N	N	N	N
	21P	Y	Y	Y	Y	Y	N	N	N	N	N	N
	22P	Y	Y	Y	Y	Y	N	N	N	N	N	N
	23P	Y	Y	Y	Y	Y	N	N	N	N	N	N
	24P	Y	Y	Y	Y	Y	N	N	N	N	N	N
	25P	Y	Y	Y	Y	Y	N	N	N	N	N	N
FWD Configuration 2	11	N	N	N	N	N	N	N	N	Y	Y	Y1
	12	N	N	N	N	N	N	N	N	Y	Y	Y1
	13	N	N	N	N	N	N	N	N	Y	Y	Y1
	21	N	N	N	N	N	N	N	N	Y	Y	Y1
	22	N	N	N	N	N	N	N	N	Y	Y	Y1
	23	N	N	N	N	N	N	N	N	Y	Y	Y1
	24	N	N	N	N	N	N	N	N	Y	Y	Y1
	25	N	N	N	N	N	N	N	N	Y	Y	Y1
	26	N	N	N	N	N	N	N	N	Y	Y	Y1
	27	N	N	N	N	N	N	N	N	Y	Y	Y1
	28	N	N	N	N	N	N	N	N	Y	Y	Y1
FWD Configuration 3	11 L/R	N	N	N	N	N	Y	Y	Y	N	N	N
	12 L/R	N	N	N	N	N	Y	Y	Y2	N	N	N
	13 L/R	N	N	N	N	N	Y	Y	Y2	N	N	N
	21 L/R	N	N	N	N	N	Y	Y	Y	N	N	N
	22 L/R	N	N	N	N	N	Y	Y	Y	N	N	N
	23 L/R	N	N	N	N	N	Y	Y	Y	N	N	N
	24 L/R	N	N	N	N	N	Y	Y	Y	N	N	N
	25 L/R	N	N	N	N	N	Y	Y	Y	N	N	N
	26 L/R	N	N	N	N	N	Y	Y	Y	N	N	N
	27 L/R	N	N	N	N	N	Y	Y	Y	N	N	N
	28 L/R	N	N	N	N	N	Y	Y	Y	N	N	N

Y1: Not allowed in stack loaded positions

Y2: Not allowed on the right-hand side

Note: Stack loading is only allowed if the hold is fully loaded. In this case and in order to restrict movement of the ULDs, a maximum gap of 1.5 inches is permitted between the stack of ULDs and the container stops.

UNCONTROLLED DOCUMENT (27 NOVEMBER 2024 11:40:38)

12.4.2 Aft Hold

		ULD Type										
	Pos	AAJ/ LAK	RAP	AMP	PAG	PMC	AKE	AVA	RKNe1	ALF	ALP	PLA/ PLW
Aft Configuration 1	31P	Y	Y	Y	Y	Y	N	N	N	N	N	N
	32P	Y	Y	Y	Y	Y	N	N	N	N	N	N
	33P	Y	Y	Y	Y	Y	N	N	N	N	N	N
	41P	Y	Y	Y	Y	Y	N	N	N	N	N	N
	42P	Y	Y	Y	Y	Y	N	N	N	N	N	N
	45L/R	N	N	N	N	N	N	Y	Y	Y	Y	Y
Aft Configuration 2	31	N	N	N	N	N	N	N	N	Y	Y	Y1
	32	N	N	N	N	N	N	N	N	Y	Y	Y1
	33	N	N	N	N	N	N	N	N	Y	Y	Y1
	34	N	N	N	N	N	N	N	N	Y	Y	Y1
	41	N	N	N	N	N	N	N	N	Y	Y	Y1
	42	N	N	N	N	N	N	N	N	Y	Y	Y1
	43	N	N	N	N	N	N	N	N	Y	Y	Y1
	44	N	N	N	N	N	N	N	N	Y	Y	Y1
	45	N	N	N	N	N	N	N	N	Y	Y	Y1
Aft Configuration 3	31 L/R	N	N	N	N	N	Y	Y	Y	N	N	N
	32 L/R	N	N	N	N	N	Y	Y	Y	N	N	N
	33 L/R	N	N	N	N	N	Y	Y	Y	N	N	N
	34 L/R	N	N	N	N	N	Y	Y	Y	N	N	N
	41 L/R	N	N	N	N	N	Y	Y	Y	N	N	N
	42 L/R	N	N	N	N	N	Y	Y	Y	N	N	N
	43 L/R	N	N	N	N	N	Y	Y	Y2	N	N	N
	44 L/R	N	N	N	N	N	Y	Y	Y2	N	N	N
	45 L/R	N	N	N	N	N	Y	Y	Y	N	N	N

Y1: Not allowed in stack loaded positions

Y2: Not allowed on the right-hand side

Notes:

Stack loading only allowed if the hold is fully loaded.

Single loading of LD3 (AKE) type ULDs is allowed

UNCONTROLLED DOCUMENT
UNCONTROLLED DOCUMENT

UNCONTROLLED DOCUMENT (27 NOVEMBER 2024 11:40:38)

13. Loading and Un-Loading

13.1 Cargo Loading System

Only fully trained and certified staff are allowed to operate the Cargo Loading System (CLS). The CLS is controlled by the:

- Master Control Panel (MCP)
- Outside Control Panel (OCP)
- Local Control Panel (LCP)
- 20ft Cargo Control Panel
- Remote Cargo Control Station

Note: A minimum of 2 persons are required to operate the Main-deck CLS. It is recommended that 3 staff members are made available for the Main-deck, to maximise the efficiency of the un-loading and loading process.

13.2 Un-Loading Sequence: Side Cargo Door (SDC)

Step 1: Un-load the aft lower deck.

Step 2: Un-load the ULDs on the main deck in the following numbered sequence **and respect the standard step un-loading method.**



Step 3: Un-load the forward lower deck.

13.3 Loading Sequence: Side Cargo Door (SDC)

Step 1: Load the forward lower deck.

Step 2: Load the ULDs on the main deck in the following numbered sequence **and respect the standard step loading method.**



Step 3: Load the aft lower deck.

UNCONTROLLED DOCUMENT (27 NOVEMBER 2024 11:40:38)

UNCONTROLLED DOCUMENT

13.4 Un-loading Sequence: Nose Cargo Door (NCD)

Step 1: Un-load the aft lower deck.

Step 2: Un-load the ULDs on the main deck in the following numbered sequence **and respect standard step un-loading method:**

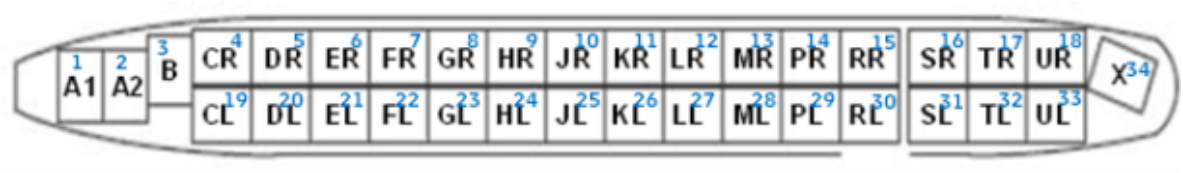

Step 3: Un-load the forward lower deck.

13.5 Loading Sequence: Nose Cargo Door (NCD)

Step 1: Load the forward lower deck.

Step 2: Load the ULDs on the main deck in the following numbered sequence **and respect standard step loading method:**



Step 3: Load the aft lower deck.

13.6 Loading Notes

13.6.1 Additional Precautions

Make sure that two persons verify that all locking devices, securing the ULDs, are engaged and operative.

13.6.2 Tail-Stand

Install tail stand, when available and required, prior to un-loading and/or loading of cargo.

13.6.3 Service point access

All access to outside service points (GPU, ASU, ACU etc) must be done using a ladder due to the height of the fuselage off the ground. Furthermore, due to the downswing of the lower-deck doors, extreme caution must be exercised when opening and closing using a Hi-Lo. **It is strongly recommended that ladders are used to gain access to the lower-deck door open/close access panels.**

13.6.4 Fuel in Centre-tank

Fuel in the **centre-tank** has a positive effect on ground stability. Please check the amount of fuel loaded in the centre-tank with the operating crew or engineer and confirm its impact on centre of gravity.

UNCONTROLLED DOCUMENT (27 NOVEMBER 2024 11:40:38)

14. Rigid, Oversized and Special Loads

For guidance on the handling of special loads, please refer to the Special Loads Regional Contact Instructions outlined in Chapter 6 **6.12.22.3 - Determining Loadability of Special Loads**. Where direct operator approval is required, the Regional Airside Team will liaise with Global Airside as needed.

14.1 Floating / Heavy Pallets

Additional strapping requirements exist for any piece or pallet which requires restraint to be attached directly to the aircraft structure. The restrictions apply for floating pallets and pallets which need to be restrained to the aircraft structure due to the cargo net not being used as the primary restraint.

Any shipment which requires additional restraint shall be notified to the operator at least 24 hours in advance for approval.

The operator shall prepare a strapping plan which shall be implemented by the operators Load Master.

Single pieces weighing 6,000kg or more shall be notified to the operator no less than 24 hours in advance for prior approval.

Full details of the additional strapping requirements shall be found in ON-14-04.

Requests for approval shall be submitted through the Polar/Atlas website as follows:

• Click on the URL: https://www.atlasair.com/cargo-services/special-cargo/

• Click on the link named “Complete Our Form”.

14.2 Tall Rigid Cargo

Tall/Rigid cargo is freight which are higher than 96 inches (2.44 meters) and/or of a rigid nature (e.g. an aircraft engine).

No Tall/Rigid cargo must be loaded if total main-deck cargo weight exceeds 281.500 lbs (127.686 kg).

14.3 Crushable Cargo Requirements

Crushable cargo must be loaded forward of any Tall/Rigid Cargo. Regardless of type of cargo carried, if positions A1, A2, B, CL and CR are utilised they must be loaded with frangible cargo. Number of Crushable ULDs required:

Load a minimum of 7 ULDs in front of the Tall/Rigid cargo.

14.3.1 Gaps and Empty ULDS

Empty ULDs and gaps are allowed anywhere within or in front of non-compressible cargo. However, it can **NOT** be classified as compressible cargo.

14.4 Piercing Cargo

Piercing cargo may not be loaded on the first and/or last loaded positions on the aircraft. Piercing Cargo is not allowed on positions A1, A2, B, CL/CR, UL/UR and X.

UNCONTROLLED DOCUMENT (27 NOVEMBER 2024 11:40:38)

UNCONTROLLED DOCUMENT

14.5 Intermediate Bulk Containers (IBC)

Following general rules apply to IBCs when carrying liquids:

- **Special load code/remark/flagging 'IBC' shall be used. This is needed for load control purposes.**
- IBCs must be built of metal or hard plastic enclosed in a metal frame.
- IBCs are only allowed as a pallet load.
- Top loading is NOT permitted.
- The floor of the pallet must be covered with supporting platforms.
- Distribute IBCs evenly on the pallet.
- Volume max. 1000 liter per IBC.
- Use absorption sheets and plastic foil according to procedures.
- The fill lever per IBC must be a minimum of 80% and a maximum of 95%
- Note that Dangerous Goods as liquids are **not** allowed on IBCs
- ULDs with IBCs must be positioned near the centre of the aircraft and are only allowed on the following positions:
    - Main Deck: E/ F/ G/ H/ J/ K/ L.
    - Lower Deck: 22P/ 23P/ 31P/ 32P.
- If IBCs are loaded the Max. Position Weight must be reduced by 20%.
- Max. 5 IBCs allowed per pallet.
- Max. Allowed Total Gross Weight of all pallets loaded with IBCs on the aircraft is 45 tons.
- All position locks must be serviceable.
- For ULDs with mixed load, the IBC restriction applies

UNCONTROLLED DOCUMENT

UNCONTROLLED DOCUMENT

UNCONTROLLED DOCUMENT (27 NOVEMBER 2024 11:40:38)

UNCONTROLLED DOCUMENT

14.6 Aircraft Engines

The following aircraft engines are loadable on the B747-400 Freighter.

Engine Type	Loaded on	Allowed Loading Positions	Loading direction	Weight distribution for load control	
				Forward position	Aft position
BR710 BR715	96” Pallet	Main deck	Not important	100% on one position	
CF6-50	16ft Pallet	FGR – RRR FGL – RRL	Fan against flight direction	40%	60%
			Fan in flight direction	60%	40%
CF6-80C2	16ft Pallet	FGR – RRR FGL – RRL	Fan against flight direction	45%	55%
			Fan in flight direction	55%	45%
CFM56-2	96” Pallet	Main deck	Not important	100% on one position	
CFM56-3 CFM56-5 CFM56-7 V2500	16ft or 20ft Pallet	FGR – RRR FGL – RRL	Fan against flight direction	40%	60%
			Fan in flight direction	60%	40%
	As exception 96” pallet	Main deck Check height and observe overlap	Fan against flight direction	100% on one position	
GE90 dis-assembled	20ft Pallet	FGR – RRR FGL – RRL	TBA	TBA	TBA
				TBA	TBA
JT3 JT8 complete	96” Pallet	Main deck	Not important	100% on one position	
JT3 JT8 Partially assembled (without thrust reverser)	96” Pallet	Main deck	Not important	100% on one position	
		Bulk 1 & 2.	Load through the hold door with the exhaust (aft end) of the engine first	100% on one position	
JT9 PW4000	20ft Pallet	FGR – RRR FGL – RRL	Fan against flight direction	TBA	TBA
			Fan in flight direction	TBA	TBA
RB211	20ft Pallet	FGR – RRR FGL – RRL	Fan against flight direction	40%	60%
Trent 500	20ft Pallet	FGR – RRR FGL – RRL	Fan against flight direction	TBA	TBA
			Fan in flight direction	TBA	TBA
Trent 700	20ft Pallet	FGR – RRR FGL – RRL	Fan against flight direction	40%	60%

* Actual loading positions may vary due to maximum allowed position weight differences within the fleet

14.7 Securing of Vehicles

DHL Wheel Cradle assemblies shall not be used as a primary means of restraint on this aircraft.

UNCONTROLLED DOCUMENT (27 NOVEMBER 2024 11:40:38)

UNCONTROLLED DOCUMENT

14.8 Live Animals

14.8.1 Horses

Max. Number of Horses per Aircraft	Varies dependent on number of horses loaded per box.
Max. Number of Horses per Box	2, 3 or 4 depending on their size.
Max. number of Horses per Groom	PAC/GTI has no requirement for number of grooms required per horse carried, however, a maximum of 3 grooms is allowed per flight.
Approved Horse Transport ULDs	Only IATA, DHL or PAC approved ULDs are allowed, i.e. HMJ or equivalent.
Approved Loading Configurations	125"/96" Twin-track (Configuration 1) or 125"/96" centre-line (Configuration 2)

Contact your Special Loads Regional contact for approval to carry horses.

14.8.2 Other Live Animals

The following table provides a list of commonly transported animals. If there is a requirement to transport animals not listed below, contact your Special Loads Regional contact.

	Main-deck	Compt. 1	Compt. 2	Compt. 3	Compt. 4	Compt. 5
Crustaceans or molluscs	Yes	Yes	Yes	Yes	Yes	Yes
Hatching eggs						
Tropical fish						
Dogs or Cats				No		
Small mammals or birds						
Bees						
Monkeys	Yes	No	Yes	No	44L/R Only	Yes
Horses	Yes*	No				
Pigs	Yes**					
Cattle	Yes**					
Sheep or goats	Yes**					
Eels	Yes					
Reptiles or amphibians	Yes	11P Only	No	No	44L/R Only	No

* Preferably close to the upper-deck stairway on the left loading lane, to provide easy access. Observe maximum number of horses allowed as per table provided: Horses.

** Load this type of cargo minimum 2 positions **aft** of smell sensitive cargo.

UNCONTROLLED DOCUMENT (27 NOVEMBER 2024 11:40:38)

UNCONTROLLED DOCUMENT

15. Restricted Commodities Loading

15.1 Notification to Captain (NOC)

As early as practicable, before departure of the aircraft, but in no case later than when the aircraft moves under its own power, departing stations shall email a copy of the Notification to the Pilot in Command (NOTOC) or the information contain on it, to the next intended destination and to the company's Dispatch Office using the following email address: Notoc@atlasair.com (alternate via fax to +1.786.265.7025

Recommended Format Subject Line: **NOTOC GTI1234 MIA-JFK 14DEC11 N499MC**

15.2 Hazardous Materials Emergency Response

The Company must be informed on any incident / accident in the ramp relevant to the wet lease operation including events before or after hazardous materials have been transported on any Company registered aircraft

Immediate Notification:

ANY INCIDENT INVOLVING DANGEROUS GOODS MUST BE REPORTED IMMEDIATELY TO THE COMPANY's HEADQUARTER BY CALLING +1-914-701-8050

A copy of the Notification to the Pilot in Command shall be made available at reasonable times and locations for distribution to Local Fire and Emergency Departments.

15.3 Reporting of Incidents involving Dangerous Goods

The Company must be informed on any incident / accident relevant to the wet lease operation for which a report is filed with the FAA IAW 49 CFR 171.15 & 171.16.

Accidents/Incidents must be reported to the state of the operator and the state in which they occur, including when undeclared or mis-declared dangerous goods are discovered in cargo.

The Dangerous Goods Authority shall be the primary point of contact when reporting incident to the Company.

15.4 Radioactive (RRY), Magnetised (MAG) and Cargo Aircraft Only (CAO)

The following Dangerous Good type loading restrictions apply. The Dangerous Good type can be loaded on positions marked with a 'Y'. The Dangerous Good type cannot be loaded on positions marked with a 'N'.

	Position												
DG Type	A1,A2	B1	CR/L	DR/L	ER/L	FR/L	GR/L	HR/L	JR/L	K-U R/L	X	FWD LD	AFT LD
MAG	N	N	N	Y	Y	Y	Y	Y	Y	Y	N	Y	Y
RRY (max. 60 TI combined)	N	N	N	N	N	N	Y	Y	Y	Y	Y	N	Y
RRY (max. 100 TI combined)	N	N	N	N	N	N	N	Y	Y	Y	Y	N	Y
RRY (max. 150 TI combined)	N	N	N	N	N	N	N	N	Y	Y	Y	N	Y
RRY (max. 200 TI combined)	N	N	N	N	N	N	N	N	N	Y	Y	N	Y

UNCONTROLLED DOCUMENT (27 NOVEMBER 2024 11:40:38)

UNCONTROLLED DOCUMENT

UNCONTROLLED DOCUMENT

15.4.1 MAG Notes

Magnetized Material must be loaded so that headings of aircraft compasses are maintained within the tolerances prescribed by the applicable aircraft airworthiness requirements and, where practical, in locations minimizing possible effects on compasses. Multiple packages may produce a cumulative effect.

15.4.2 CAO Notes

Packages or overpacks of dangerous goods bearing the “Cargo Aircraft Only” label must be loaded on a cargo aircraft in accordance with one of the following provisions:

- In a Class C aircraft cargo compartment; or
- In a unit load device equipped with a fire detection/suppression system equivalent to that required by the certification requirements of a Class C aircraft cargo compartment as determined by the appropriate national authority; or
- In such a manner that in the event of an emergency involving such packages or overpacks, a crew member or other authorized person can access those packages or overpacks, and can handle and, where size and weight permit, separate such packages from other cargo.
- The following items are exempted from the accessibility requirements:
- Substances of Class 3, Packing Group III, other than those with a subsidiary risk of Class 8
- Toxic substances (Division 6.1) with no subsidiary risk other than Class 3
- Infectious substances (Division 6.2);
- Radioactive materials Class 7
- Miscellaneous dangerous goods Class 9
- Articles of Identification Numbers UN0012, UN0014, or UN0055
- Limited Quantity or Excepted Quantity material

When requested, packages or overpacks bearing the “Cargo Aircraft Only” label should be made available to the crew for inspection prior to departure.

15.4.3 RRY Notes

Limitation of exposure of persons to radiation:

Radioactive material must be segregated sufficiently from workers and from members of the public. All relevant storage personnel must receive such instructions, as are necessary concerning the hazards involved and the precautions to be observed.

Maximum Transport and Criticality Safety Indices:

Each single package on the aircraft has a transport index no greater than 10.0.

The combined transport index of all the packages on the aircraft is no greater than 200, and the combined criticality index of all the packages on the aircraft is no greater than:

- 50 on a non-exclusive use cargo aircraft, or
- 100 on an aircraft assigned for the exclusive use

Contact the Dangerous Goods Authority for additional information and when requesting an approval to operate under exclusive use.

The combined transport index and combined criticality index are determined by adding together the transport index and criticality index numbers, respectively, shown on the labels of the individual packages.

UNCONTROLLED DOCUMENT (27 NOVEMBER 2024 11:40:38)

Where the transport index or criticality safety indices of a single package, overpack or freight container exceeds 50, storage and loading must be such as to maintain spacing of 6 m (20 ft.) from other groups of such packages, overpacks or freight containers.

The following load incompatibilities between AVI, HEG, LHO and FIL in the lower holds and RRY on the main deck apply:

If this special load …	… Is loaded into lower-deck compartment …	… then max TI and allowed main-deck positions are …		
		Max 50.0 TI together on positions	Max 100.0 TI together on positions	Max 200.0 TI together on positions
AVI, HEG, LHO	1	G-T	H-X	K-X
	2	H-T	J-X	K-X
	3	G and P-X	Q-X	R-X
	4	G-j and S-X	H and x	**Not allowed**
	5	G-L	H-L	K
FIL	1	G-X	H-X	K-X
	2	J-X	K-X	P-X
	3	R-X	X	**Not allowed**
	4	G-H and X	**Not allowed**	**Not allowed**
	5	G-K	H-J	**Not allowed**

The following load incompatibilities between RRY in the lower holds and AVI, HEG, LHO, FIL in the main deck apply:

If this RRY …	… is loaded into lower-deck compartment …	… then the following main-deck positions are allowed for …	
		AVI, HEG, LHO	FIL
Max 50.0 TI	3	A-G and Q-X	A-F and R-X
	4	A-J and S-X	A-H and X
Max 100.0 TI	3	A-G and Q-X	A-F and X
	4	A-H and X	A-G
Max 150.0 TI	3	A-F and R-X	A-B
	4	A-G	A-D

15.5 Dry Ice

Please see the Global Supplementary Operational Document **Dry Ice Consolidation table** for the current maximum allowed Dry Ice limits.

For Temperature Controlled Containers operating with dry ice as the cooling agent the instructions and procedures for Temperature Controlled Containers as contained in Unit Load Devices and Equipment chapter at the WBM must be followed.

15.6 Dry Ice (ICE) and Live Animals (AVI)

There is no weight limit for the loading of Dry Ice (ICE) together with Live Animals (AVI) on the Main-deck. A maximum of 200kg of ICE per lower-deck hold may be carried together with AVI. Dry Ice and Live Animals may be loaded in the same compartment provided they are separated by a minimum of 3 m (10 ft.). The larger the concentration of dry ice, the greater the distance is required.

UNCONTROLLED DOCUMENT (27 NOVEMBER 2024 11:40:38)

UNCONTROLLED DOCUMENT

15.7 Lithium Batteries

Please see the Global Supplementary Operational Document **Lithium Battery Loadability Consolidation Table** for the current UN3480 Section IA/IB (RBI), UN3090 Section IA/IB (RBM), UN3481 Section I (RLI), UN3091 Section I (RLM) load ability limits.

15.8 Compressed Oxygen Cylinders

No more than 6 cylinders not exceeding a total combined weight of 75k (165lb) can be loaded into any one aircraft in an inaccessible aircraft cargo compartment(s) that do not have fire or smoke detection systems and fire suppression systems.

15.9 Compatibility

Packages containing dangerous goods that might react dangerously with each other, must not be stowed on an aircraft next to each other or in a position that would allow interaction between them in event of leakage. Packages shall be loaded in accordance with compatibility instructions details in **7.9 - Loading Precautions for Incompatible Loads**.

UNCONTROLLED DOCUMENT

UNCONTROLLED DOCUMENT

UNCONTROLLED DOCUMENT (27 NOVEMBER 2024 11:40:38)

UNCONTROLLED DOCUMENT

16. Messaging and Reporting

16.1 Messaging

Standard messaging rules apply.

16.2 Reporting

Standard reporting rules apply.

UNCONTROLLED DOCUMENT

UNCONTROLLED DOCUMENT

UNCONTROLLED DOCUMENT (27 NOVEMBER 2024 11:40:38)

UNCONTROLLED DOCUMENT

17. Load Control Data

17.1 Standard Mass Additions

17.1.1 Additional Crew Members (ACM)

Maximum Number of ACMs:	6
Mass of ACM:	110 kg incl. baggage

17.1.2 Fly Away Kit (FAK) and Ballast

FAK is not carried as standard on this aircraft.

Ballast is not carried as standard on this aircraft.

17.2 Minimum Fuel and Standard Taxi Fuel

Minimum Fuel:	30,000 kg
Standard Taxi Fuel:	900 kg

17.3 LMC Restrictions

Maximum Manual load-sheet LMC:	Not allowed
Maximum SABLE load-sheet LMC:	+/- 2000 kg

UNCONTROLLED DOCUMENT

UNCONTROLLED DOCUMENT

UNCONTROLLED DOCUMENT (27 NOVEMBER 2024 11:40:38)

UNCONTROLLED DOCUMENT

18. Maximum Package Dimensions

18.1 Main deck Side Cargo Door (SCD)

MAIN HOLD ALLOWABLE PACKAGE SIZES - SIDE CARGO DOOR														
HEIGHT IN.	WIDTH IN.													
	10	20	30	40	50	60	70	80	90	100	110	120	130	134
	MAXIMUM LENGTH IN.													
120	470	412	367	331	302	280	259	239	219	198	179	161		
118	470	412	367	331	302	280	259	239	219	198	179	161	144	137
116	495	434	386	346	314	290	268	248	228	208	188	169	151	145
114	536	458	404	361	326	299	277	256	237	217	196	177	158	153
112	546	474	417	370	334	306	282	261	242	222	202	182	163	157
110	573	492	429	380	342	312	287	266	246	226	207	187	168	161
108	600	509	441	391	350	318	293	271	251	231	212	192	173	165
106	600	525	455	399	356	326	297	275	254	234	215	196	176	170
104	600	543	468	409	363	333	303	279	258	239	219	199	181	175
102	600	561	481	418	373	338	309	284	263	243	224	204	185	180
100	600	574	492	428	378	346	313	288	267	246	227	207	188	183
98	600	586	505	438	386	353	318	292	270	250	230	210	192	186
0-96	600	600	517	447	395	355	323	297	275	254	232	213	196	192

18.2 Main deck Nose Cargo Door (NCD)

MAIN HOLD ALLOWABLE PACKAGE SIZES - NOSE CARGO DOOR	
HEIGHT IN.	WIDTH IN.
96	106
90	108
80	113
70	132
60	140
50	143
40	145
30	147
20	148

UNCONTROLLED DOCUMENT (27 NOVEMBER 2024 11:40:38)

UNCONTROLLED DOCUMENT

18.3 Bulk Compartment

BULK HOLD CROSS SECTIONS

The figure below illustrates the general layout of the bulk hold. The numbered labels and shaded panels correspond to the cross-sections provided following the illustration.

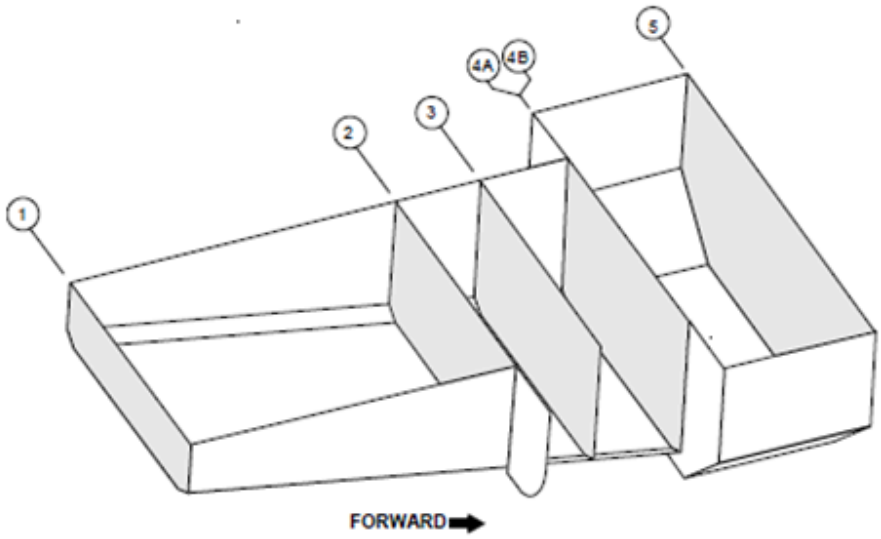

CROSS SECTION NO.	B.A. IN.
1	2220.0
2	2100.0
3	2067.0
4A	2040.0
4B	2040.0
5	1980.0

UNCONTROLLED DOCUMENT

UNCONTROLLED DOCUMENT

UNCONTROLLED DOCUMENT (27 NOVEMBER 2024 11:40:38)

UNCONTROLLED DOCUMENT

Allowable Package Sizes with Net Installed at B.A. 1980

The following table is applicable for packages loaded through the large aft cargo door (B.A. 1925.0) with the net installed at B.A. 1980.0.

BULK HOLD ALLOWABLE PACKAGE SIZES - NET AT B.A. 1980										
HEIGHT IN.	WIDTH IN.									
	10	20	30	40	50	60	70	80	90	100
	MAXIMUM LENGTH IN.									
47	140	140	140	140	140	140	140	140	135	120
43	155	155	155	155	155	155	155	145	135	120
39	180	180	180	180	180	175	155	145	135	120
36	200	200	200	200	180	175	160	145	135	120
32	230	230	230	230	205	180	160	145	135	120
24-28	235	235	235	235	215	180	160	145	135	120
4-20	240	240	240	240	215	180	160	145	135	120

The following table is applicable for packages loaded through the bulk cargo door (B.A. 2067.0 IN.) with the net installed at B.A. 1980.0.

BULK HOLD ALLOWABLE PACKAGE SIZES - NET AT B.A. 1980											
HEIGHT IN.	WIDTH IN.										
	4	8	12	16	20	24	28	32	36	40	44
	MAXIMUM LENGTH IN.										
47	140	140	140	132	126	121	117	114	110	108	108
43	160	160	155	145	140	135	130	125	120	115	110
39	180	165	155	150	140	135	130	125	120	120	120[a]
36	185	170	160	150	145	135	130	125	120	120[a]	120[a]
32	190	175	165	155	150	140	135	130	125[a]	120[a]	120[a]
28	200	185	170	160	155	145	135[a]	130[a]	125[a]	120[a]	120[a]
24	220	190	175	165	155	145	135[a]	130[a]	125[a]	120[a]	120[a]
20	220	195	180	170	155	145	135[a]	130[a]	125[a]	120[a]	120[a]
16	230	205	190	175	160	150	140	135[a]	125[a]	120[a]	120[a]
12	235	220	200	180	165	155	145	135[a]	130[a]	125[a]	120[a]
8	235	235	215	195	175	160	150	140	130[a]	125[a]	120[a]
4	235	235	225	210	185	170	155	145	135[a]	125[a]	120[a]

[a] Package loaded aft of the door.

The following table is applicable for tilted[1] packages loaded forward of the bulk cargo door (B.A. 2067.0 IN.) with the net installed at B.A. 1980.0.

BULK HOLD ALLOWABLE PACKAGE SIZES - NET AT B.A. 1980											
HEIGHT IN.	WIDTH IN.										
	4	8	12	16	20	24	28	32	36	40	44
	MAXIMUM LENGTH IN.										
64	108	108									
60	108	108	108								
56	108	108	108	108							
52	108	108	108	108	108						
48	140	140	140	132	126	121	117	114	110	108	108

UNCONTROLLED DOCUMENT (27 NOVEMBER 2024 11:40:39)

UNCONTROLLED DOCUMENT

Allowable Package Sizes with Net Installed at B.A. 2040

The following table is applicable for packages loaded through the large aft cargo door (B.A. 1925.0) with the net installed at B.A. 2040.0.

BULK HOLD ALLOWABLE PACKAGE SIZES - NET AT B.A. 2040										
HEIGHT IN.	WIDTH IN.									
	10	20	30	40	50	60	70	80	90	100
	MAXIMUM LENGTH IN.									
47	95	95	95	95	95	95	95	80	73	67
43	114	114	114	114	114	114	114	80	73	67
39	133	133	133	133	133	133	133	80	73	67
36	148	148	148	148	148	148	148	80	73	67
32	166	166	166	166	166	166	160	80	73	67
4-28	180	180	180	180	180	180	160	80	73	67

The following table is applicable for packages loaded through the bulk cargo door (B.A. 2067.0 IN.) with the net installed at B.A. 2040.0.

BULK HOLD ALLOWABLE PACKAGE SIZES - NET AT B.A. 2040											
HEIGHT IN.	WIDTH IN.										
	4	8	12	16	20	24	28	32	36	40	44
	MAXIMUM LENGTH IN.										
47	95	95	95	95	95	95	95	95	95	95	95
43	114	114	114	114	114	114	114	114	114	114	110
39	133	133	133	133	133	133	130	125	120	120	120[a]
36	148	148	148	148	145	135	130	125	120	120[a]	120[a]
32	166	166	165	155	150	140	135	130	125[a]	120[a]	120[a]
28	175	175	175	160	155	145	135[a]	130[a]	125[a]	120[a]	120[a]
24	175	175	175	165	155	145	135[a]	130[a]	125[a]	120[a]	120[a]
20	175	175	175	170	155	145	135[a]	130[a]	125[a]	120[a]	120[a]
16	175	175	175	175	160	150	140	135[a]	125[a]	120[a]	120[a]
12	175	175	175	175	165	155	145	135[a]	130[a]	125[a]	120[a]
8	175	175	175	175	175	160	150	140	130[a]	125[a]	120[a]
4	175	175	175	175	175	170	155	145	135[a]	125[a]	120[a]

[a] Package loaded aft of the door.

The following table is applicable for tilted[1] packages loaded forward of the bulk cargo door (B.A. 2067.0 IN.) with the net installed at B.A. 2040.0.

BULK HOLD ALLOWABLE PACKAGE SIZES - NET AT B.A. 2040											
HEIGHT IN.	WIDTH IN.										
	4	8	12	16	20	24	28	32	36	40	44
	MAXIMUM LENGTH IN.										
56	46	46	46	46							
52	68	68	68	68	68						
48	90	90	90	90	90	90	90	90	90	90	90

UNCONTROLLED DOCUMENT (27 NOVEMBER 2024 11:40:39)