UNCONTROLLED DOCUMENT

UNCONTROLLED DOCUMENT

CGF B733F
Cargo Air B737-300F

Revision: 3
Date: 25 September 2024

1 CargoAir Boeing 737-300F Registrations
2 Aircraft Dimensions
3 Aircraft Servicing Points and Specifications
4 Ground Support Equipment
5 Standard Turnaround Times
6 Safety Areas
7 Strong Wind Conditions
8 Aircraft Door Dimensions
9 Compartment Classification and Air-Conditioning
10 Aircraft Cabin Contour Dimensions
11 Maximum Position Weights
12 Aircraft ULD Compatibility
13 Loading and Un-Loading
14 Rigid, Oversized and Special Loads
15 Restricted Commodities Loading
16 Messaging and Reporting
17 Load Control Data
18 Maximum Package Dimensions

UNCONTROLLED DOCUMENT (28 NOVEMBER 2024 15:51:11)

Page	Date	Comment
13	25 September 2024	ULD Types no longer available in the network removed. *(Minor)*
18	25 September 2024	Guidance on the handling of special loads information added. *(Minor)*

UNCONTROLLED DOCUMENT

UNCONTROLLED DOCUMENT

UNCONTROLLED DOCUMENT

1. CargoAir Boeing 737-300F Registrations

IATA Designator: -

ICAO Designator: CGF

Valid for: **LZCGO, LZCGP, LZCGQ.**

Note: Aircraft contained within this entry have been converted by different companies and may have different characteristics. Where differences occur, these will be detailed in the relevant section.

UNCONTROLLED DOCUMENT

UNCONTROLLED DOCUMENT

UNCONTROLLED DOCUMENT (28 NOVEMBER 2024 15:51:11)

2. Aircraft Dimensions

All dimensions in meters.



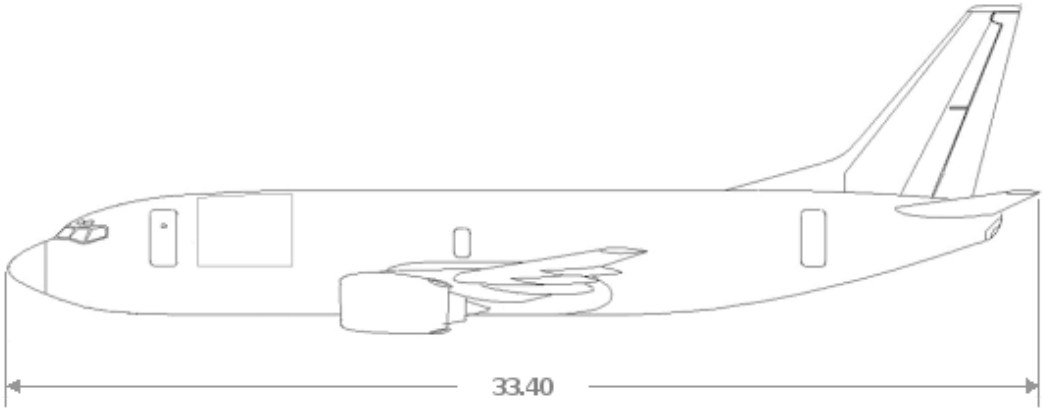

UNCONTROLLED DOCUMENT
UNCONTROLLED DOCUMENT

UNCONTROLLED DOCUMENT (28 NOVEMBER 2024 15:51:11)

UNCONTROLLED DOCUMENT

3. Aircraft Servicing Points and Specifications

3.1 Servicing Points

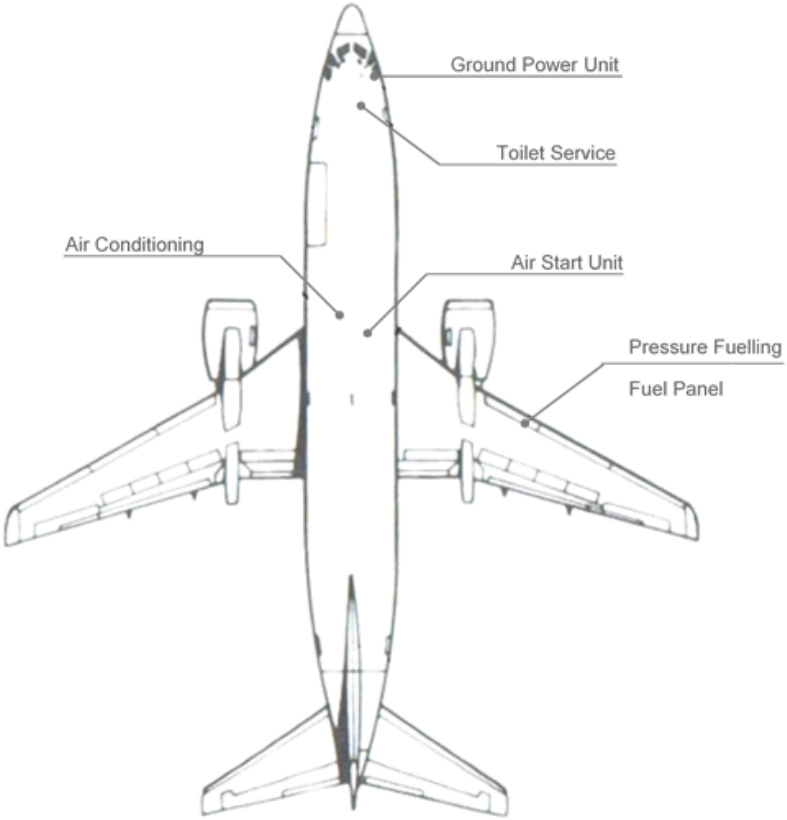

3.2 Servicing Specifications

System	Requirements	Notes
Ground Power Unit	115/200V AC / 60 kVA / 400 Hz	
Fuel	Jet A1	Fuel Control Panel **on RH wing only** **Fuel panel measurements in Pounds**
Air Condition Unit	Maximum Flow Rate 210 ppm	1 ACU inlet available
Air Start Unit	Minimum Capacity 120-145 ppm Max. / Min. pressure 45 / 30 psi	1 ASU inlet available.

UNCONTROLLED DOCUMENT

UNCONTROLLED DOCUMENT

UNCONTROLLED DOCUMENT (28 NOVEMBER 2024 15:51:11)

UNCONTROLLED DOCUMENT

4. Ground Support Equipment

4.1 Positioning of GSE

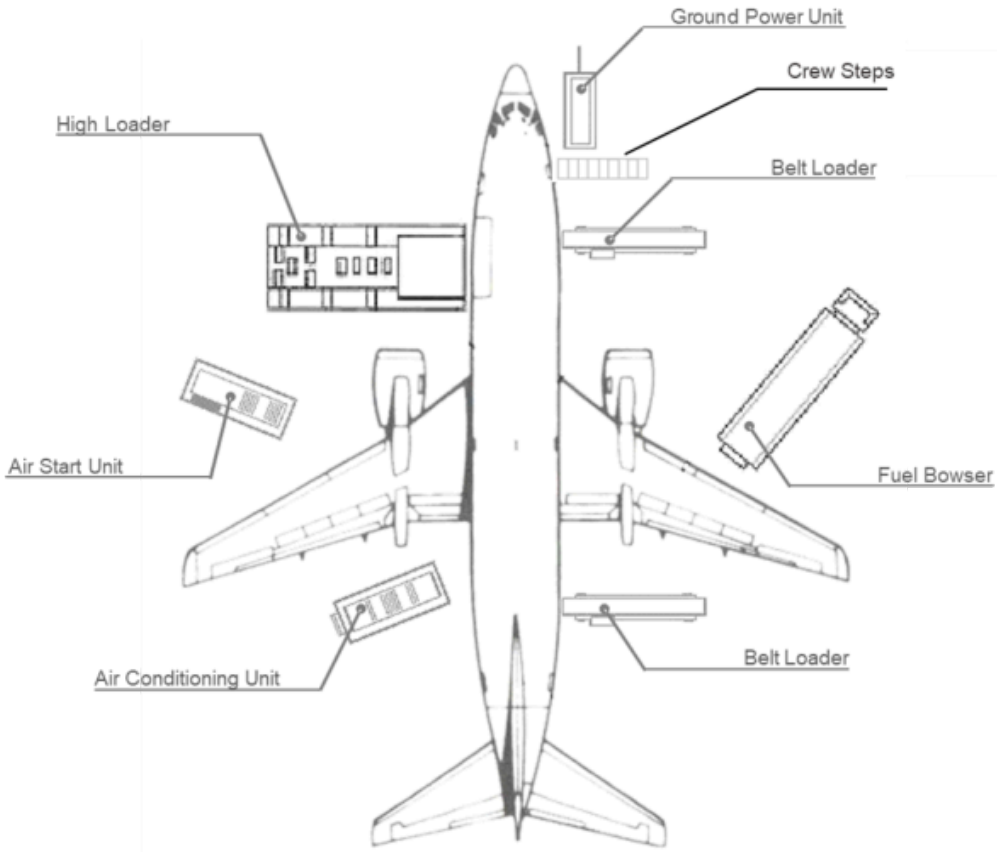

4.2 GSE Requirements

GSE	Type	Quantity
High Loader	Standard	1
Crew stairs*	Platform height 2.62 – 2.77 meters	1
Ground Power Unit	Diesel, Electric or Ground-Power	1
Air Start Unit	Standard	1
Belt Loader	Standard	1 or 2
Tractor	N/A	4
Dolly Wagon Main-deck	125”/88” & 108”/88” capable	Up to 10
Belly Container / Wagon	As required	According to load

UNCONTROLLED DOCUMENT (28 NOVEMBER 2024 15:51:11)

UNCONTROLLED DOCUMENT

5. Standard Turnaround Times

Turn-around time for a transit stop: 00:35 hour (partial off- and on-load)

Turn-around time for an end stop: 00:45 hour (full off- and on-load)

UNCONTROLLED DOCUMENT

UNCONTROLLED DOCUMENT

UNCONTROLLED DOCUMENT (28 NOVEMBER 2024 15:51:11)

6. Safety Areas

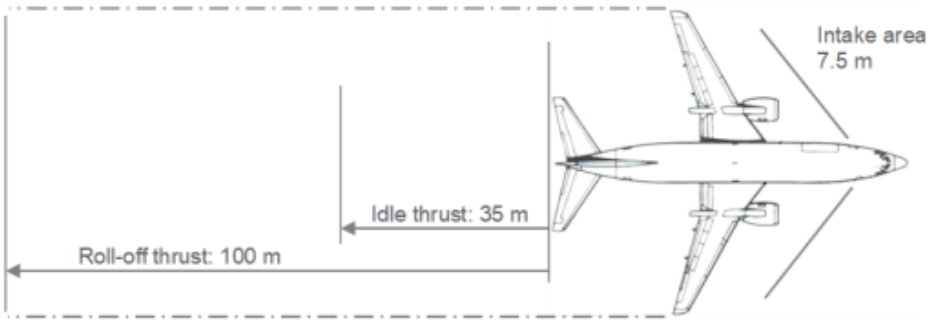

UNCONTROLLED DOCUMENT
UNCONTROLLED DOCUMENT

UNCONTROLLED DOCUMENT (28 NOVEMBER 2024 15:51:11)

UNCONTROLLED DOCUMENT

7. Strong Wind Conditions

If the wind conditions on the ramp reach the following speeds, the corresponding actions shall be taken.

Wind Speed	Action
Up to 45 knots	Normal Operations: All doors can be opened and left open
More than 45 knots	Do not open additional doors
More than 45 knots	All open doors shall be closed immediately

UNCONTROLLED DOCUMENT

UNCONTROLLED DOCUMENT

UNCONTROLLED DOCUMENT (28 NOVEMBER 2024 15:51:11)

8. Aircraft Door Dimensions

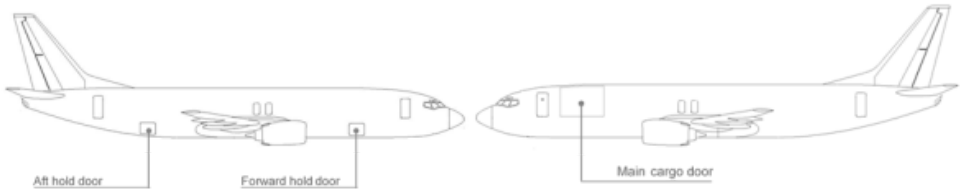

Door width, height, and sill height are defined as follows.

(This drawing is for illustration purposes only and may not be an exact representation of this aircraft type)

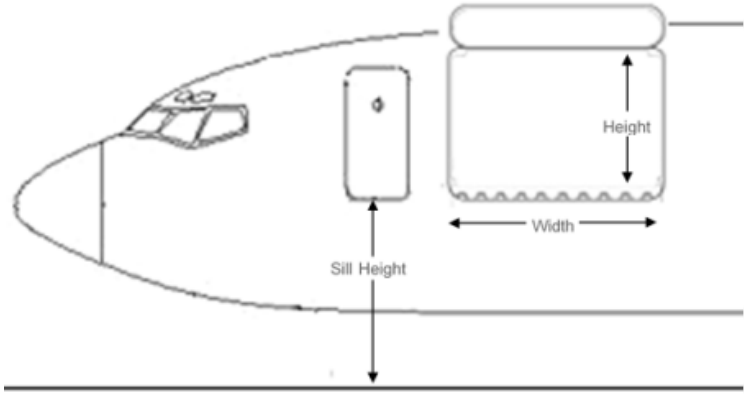

All dimensions are in centimetres (cm).

Door	Door Width	Door Height	Min. Door Sill Height	Max. Door Sill Height
Crew Door	-	-	262	277
Main Deck	348	213	265	280
Forward Hold	121	89	127	140
Aft Hold	121	89*	137	137

Notes:

* Door is angled. Measurement is at forward side of door, aft side is lower (78 cm)

All cargo doors shall be operated by either: Flight crew, an authorised mechanic or by a member of the ground handling team specifically authorised by Cargo Air.

UNCONTROLLED DOCUMENT (28 NOVEMBER 2024 15:51:11)

9. Compartment Classification and Air-Conditioning

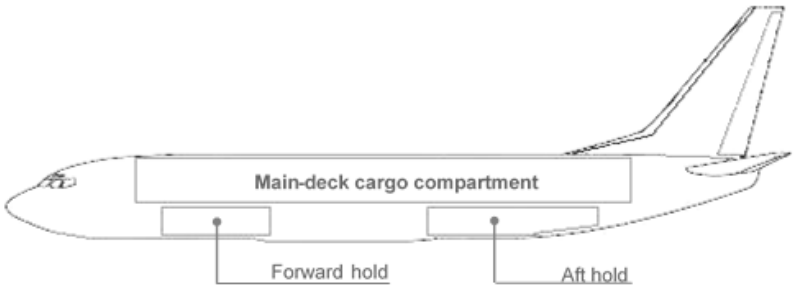

9.1 Compartment Classification

Compartment	Features
Main-deck All positions loaded	- Classification **E**
	- Pressurisation
	- Smoke Detection
	- Shut off valve for ventilation air flow for fire suppression controlled by cockpit
	- **In-accessible** during flight
Lower-deck All Compartments	- Classification **C**
	- Pressurisation
	- Smoke Detection
	- Fire Suppression controlled by cockpit
	- **In-accessible** during flight

9.2 Air-Conditioning

	Main-deck	Forward Hold	Aft Hold
Temperature	1C to 22C	Max 3C*	Max 3C*
Heating	Yes	No	
Heat adjust			
Cooling			
Ventilation		Yes	

*Temperature in the Forward and Aft Holds depend on the Main-deck heating but will never be more than 3C. No separate heating of the lower-deck.

UNCONTROLLED DOCUMENT (28 NOVEMBER 2024 15:51:11)

10. Aircraft Cabin Contour Dimensions

10.1 Aircraft Layout Type 1

The aircraft is divided into three contour zones: CI, CII and CIII.



10.1.1 Contour CI

No dimensions image currently available.

10.1.2 Contour CII

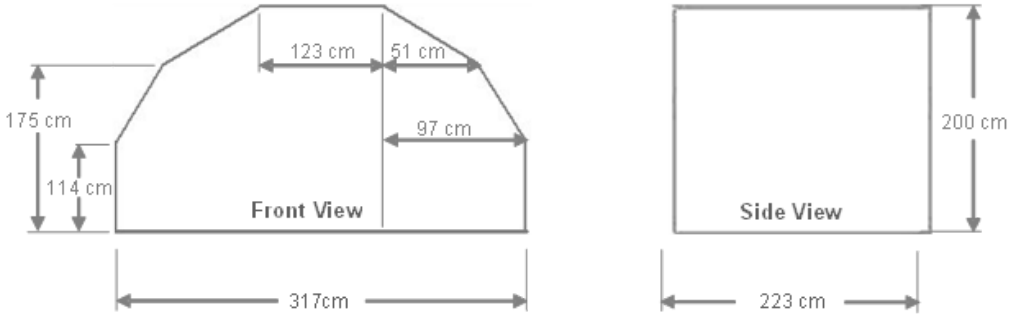

10.1.3 Contour CIII



UNCONTROLLED DOCUMENT
UNCONTROLLED DOCUMENT

UNCONTROLLED DOCUMENT (28 NOVEMBER 2024 15:51:11)

UNCONTROLLED DOCUMENT

11. Maximum Position Weights

11.1 Maximum Main-deck ULD Weights in Kilograms

	ULD Position									
ULD Size	A	B	C	D	E	F	G	H	J	K
108”/88”		1702	1816	1906	2494	1702	1861		1702	
	1	2	3	4	5	6	7	8	9	10
125”/ 88”		2542	2724		3628	2270	2860	2633	1816	
61.5”/60.4"										1021
53"/88" (AEP)	1113*									

* This weight will be reduced to 1021 kg if a 108”/88” ULD is loaded in position B

11.2 Maximum Total Main-deck Load

9G Barrier Limit: 20,865 Kg

See **ULD Clearance** for additional main deck loading restrictions.

11.3 Maximum Lower-deck Compartment Weights in Kilograms

	Forward hold		Aft hold	
Compartment	1	2	3	4
Max. weight (kg)	1151	1118	2337	1132
Max. hold weight (kg)	2269		3469	
Volume Max. (m3)	12		18.3	

See **Loading height restrictions on lower decks** for additional restrictions.

UNCONTROLLED DOCUMENT (28 NOVEMBER 2024 15:51:11)

12. Aircraft ULD Compatibility

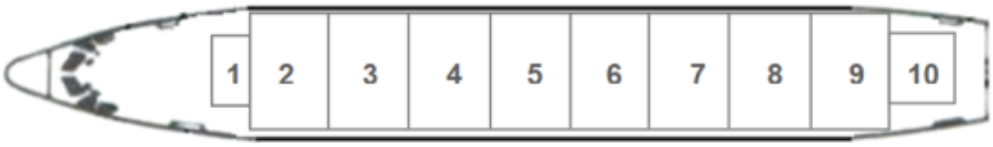

Configuration 1: 1 Lateral 53”/88”, 8 Lateral 125”/88” and 1 Lateral 61.5”/60.4”or 53”/88” or 61.5”/88” positions.



Configuration 2: 1 Lateral 53”/88”', 8 Lateral 108”/88” and 1 Lateral 61.5”/60.4”or 53”/88” or 61.5”/88” positions.

The following ULD type loading restrictions apply. The ULD type can be loaded on positions marked with a ‘Y’. The ULD type cannot be loaded on positions marked with a ‘N’.

		ULD Type															
	Pos	AAA	AAC	AAJ	ABU	ABY	AEH	AEP	AKE	AKN	AYY	LAK	LAY	PAG	PEA	PEB	PBJ
Configuration 1.	1	N	N	N	N	N	Y	Y	N	N	N	N	N	N	Y	Y	N
	2	Y	Y1	Y	N	N	N	N	N	N	N	Y	Y	Y	N	N	N
	3	Y	Y1	Y	N	N	N	N	N	N	N	Y	Y	Y	N	N	N
	4	Y	Y1	Y	N	N	N	N	N	N	N	Y	Y	Y	N	N	N
	5	Y	Y1	Y	N	N	N	N	N	N	N	Y	Y	Y	N	N	N
	6	Y	Y1	Y	N	N	N	N	N	N	N	Y	Y	Y	N	N	N
	7	Y	Y1	Y	N	N	N	N	N	N	N	Y	Y	Y	N	N	N
	8	Y	Y1	Y	N	N	N	N	N	N	N	Y	Y	Y	N	N	N
	9	Y	Y1	Y	N	N	N	N	N	N	N	Y	Y	Y	N	N	N
	10	N	N	N	N	N	Y	Y	Y	Y	Y	N	N	N	Y	Y	N
Configuration 2.	A	N	N	N	N	N	Y	Y	N	N	N	N	N	N	Y	Y	N
	B	N	N	N	Y	Y	N	N	N	N	N	N	N	N	N	N	Y
	C	N	N	N	Y	Y	N	N	N	N	N	N	N	N	N	N	Y
	D	N	N	N	Y	Y	N	N	N	N	N	N	N	N	N	N	Y
	E	N	N	N	Y	Y	N	N	N	N	N	N	N	N	N	N	Y
	F	N	N	N	Y	Y	N	N	N	N	N	N	N	N	N	N	Y
	G	N	N	N	Y	Y	N	N	N	N	N	N	N	N	N	N	Y
	H	N	N	N	Y	Y	N	N	N	N	N	N	N	N	N	N	Y
	J	N	N	N	Y	Y	N	N	N	N	N	N	N	N	N	N	Y
	K	N	N	N	N	N	Y	Y	Y	Y	Y	N	N	N	Y	Y	N

Y1:Only AAC serial range 9021 and higher allowed

UNCONTROLLED DOCUMENT
UNCONTROLLED DOCUMENT

UNCONTROLLED DOCUMENT (28 NOVEMBER 2024 15:51:11)

13. Loading and Un-Loading

13.1 Un-Loading Sequence

Step 1: Un-load the aft lower deck.

Step 2: Un-load the ULDs on the main deck in the following numbered sequence, **and respect standard stage un-loading method**.

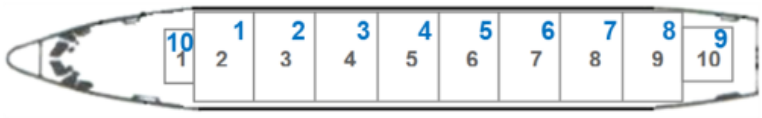

Step 3: Un-load the forward lower deck.

13.2 Loading Sequence

Step 1: Load the forward lower deck.

Step 2: Load the ULDs on the main deck in the following numbered sequence, **and respect standard stage loading method**.

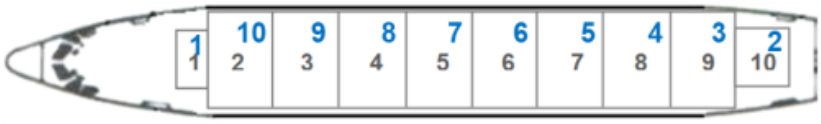

Step 3: Load the aft lower deck.

13.3 Loading Notes

13.3.1 Tail-Tipping

The B737-300F is not susceptible to tail-tipping. Due care, however, must be taken whilst un-loading and loading the aircraft to prevent the Centre of Gravity moving to a position that would result in tail-tipping. Following the prescribed un-loading and loading sequence is therefore of paramount importance. Furthermore, care must be taken whilst loading the ULDs on the main-deck, moving them at a moderate pace down the aircraft to prevent a sudden CoG shift, which may result in a tail-tip situation.

The risk of tail-tipping is minimal, even with the Main-deck and forward hold empty and a full aft lower hold plus 3 man loading crew.

13.3.2 Tail Post

Tail-post is not applicable for this aircraft type.

13.3.3 Parallel Dolly-train Un-load

Due to the limited clearance under the wing, parallel dolly-train un-load is not allowed on this aircraft type.

13.3.4 ULD Clearance

There is very limited clearance between some ULDs and the inner roof lining on this aircraft. ULDs, AAA and AAC/LAY especially, which are even slightly out of contour will impact the roof lining and cause damage. Due care must therefore be exercised when un-loading and loading this aircraft.

UNCONTROLLED DOCUMENT (28 NOVEMBER 2024 15:51:11)

UNCONTROLLED DOCUMENT

13.3.5 Loading height restrictions on Lower Deck

When loading the lower-deck, a 5cm / 2” clearance must be respected between the top of the freight profile and the ceiling of the lower-deck hold. Marking inside the holds indicate the maximum loading height of the freight build and these markings must be respected at all times.

13.3.6 9G Barrier Door operation

Door to be operated by flight crew or maintenance staff only.

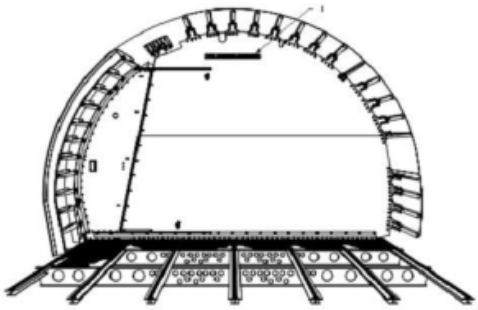

13.3.7 High-Loader positioning to main-deck cargo-door

Please note that the right hand of the high loader platform should be aligned as per the marking on the diagram below.

There are also yellow stripes on the main cargo deck floor and on the opposite side of the side wall of the main cargo deck, which help the high loader to align against this stripe as well.

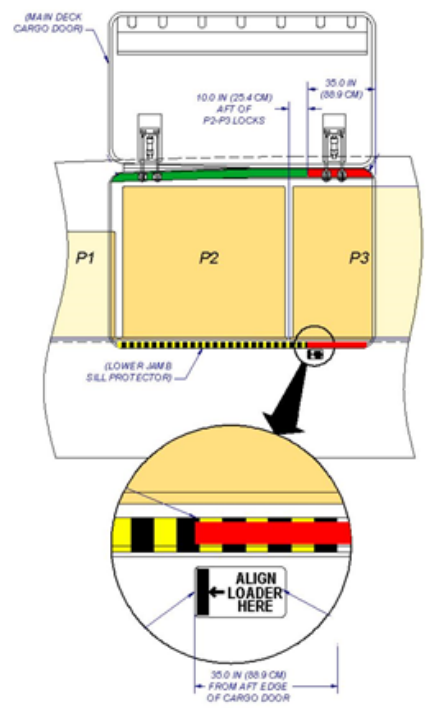

UNCONTROLLED DOCUMENT (28 NOVEMBER 2024 15:51:11)

UNCONTROLLED DOCUMENT

13.3.8 Placement of warning flag on High-Loader rail

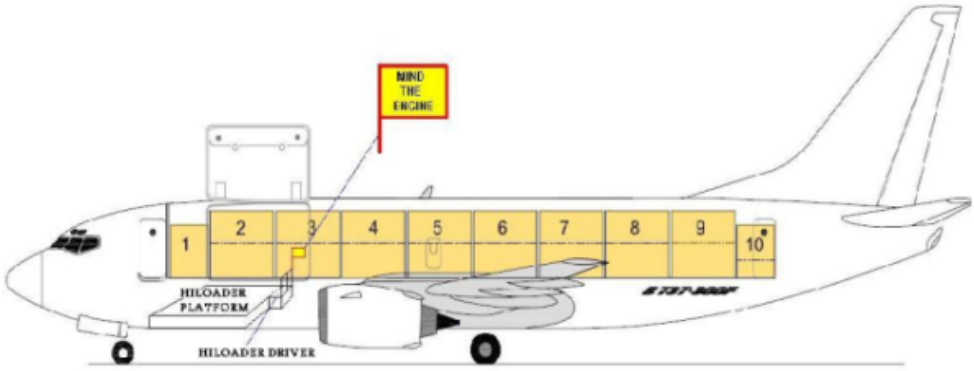

Before opening the main cargo door, the first officer (or Mechanic if present) shall give a warning flag to the hi-Loader operator. The hi-loader operator shall attach the warning flag to the rail of the hi-loader as shown in the above drawing. The door shall only be opened by flight crew, authorised mechanics or an authorised member of the ground handling team.

After the Hi-loader has been removed from the side of the aircraft, the hi-Loader operator shall return the warning flag to the ramp supervisor / team lead in order to be returned to the flight crew.

13.3.9 Procedure prior to closing the aircraft Main Cargo Door

After the aircraft has been loaded/unloaded and all ground handling activities have been completed, but prior to the removal of the hi-loader from the side of the aircraft, the ramp supervisor/ team leader shall perform a visual check to confirm that the surroundings of the Main Cargo Door and Lower Hold doors are; Clear of any damage, lower jamb sill protector of the MCD is in the upper / stowed position and that the aircraft is cleared for door closing.

After the inspection has been carried out and the doors are ready to be closed, all cargo doors shall be closed by either a member of the flight crew, an authorised mechanic or an authorised member of the ground handing team.

13.3.10 Manoeuvring the hi-loader away from the aircraft

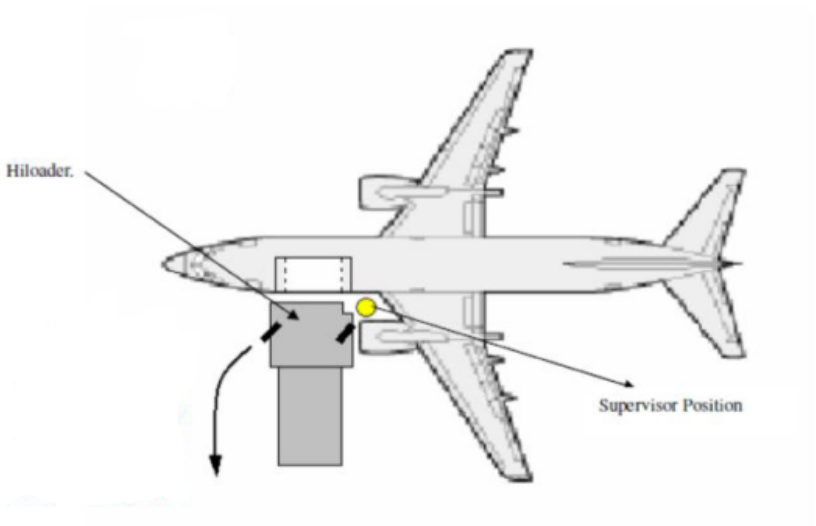

UNCONTROLLED DOCUMENT (28 NOVEMBER 2024 15:51:11)

The hi-loader wheels shall be turned as per the above diagram prior to reversing away from the aircraft. The hi-loader shall travel for at least 1 meter before the wheels are straightened, after which the hi-loader shall be fully removed from the aircraft vicinity.

When moving the hi-loader backwards away from the aircraft, pay attention to engine clearance until the hi-loader has passed the engine.

13.3.11 Fuel panel measurements

The fuel panel measurement for the following aircraft is in **pounds** (lbs.): **LZ-CGO**, **LZ-CGP**.

The fuel panel measurement for the following aircraft is in **kilograms** (kg.): **LZ-CGQ**.

13.3.12 Closing of Aircraft Doors during periods of inactivity

If the aircraft is to be left unattended by the ground handling team for a period of 15minutes or greater, all exterior aircraft doors shall be closed. If a member of the operating crew or company representative is present at the aircraft, a check shall be made that closure of the doors will not impact their duties.

As a reminder, the Main Cargo door shall be operated by a member of Flight crew, an authorised mechanic or by a member of the ground handling team specifically authorised by Cargo Air.

13.3.13 Hooking the GPU cable to the GPU Receptacle Hatch

A plastic hook should be used to hook the GPU cable to the aircraft's GPU receptacle hatch. If a plastic hook is not available, rubber or other protective material should be used as a buffer between the metal hook and the attachment point on the GPU receptacle hatch. This is to prevent contact between metal parts and eventual damage to the aircraft fuselage. The image below is an example of a rubber buffer placed around a GPU cable's metal hook.



UNCONTROLLED DOCUMENT
UNCONTROLLED DOCUMENT

UNCONTROLLED DOCUMENT (28 NOVEMBER 2024 15:51:11)

14. Rigid, Oversized and Special Loads

For guidance on the handling of special loads, please refer to the Special Loads Regional Contact Instructions outlined in Chapter 6 **6.12.22.3 - Determining Loadability of Special Loads**. Where direct operator approval is required, the Regional Airside Team will liaise with Global Airside as needed.

14.1 Floating / Heavy Pallets

ULDs which are heavier than the standard allowed maximum gross weight may be loaded on the main deck on a floating position.

Permission must be sought from Cargo Air before accepting any ULDs which require loading on a floating position.

The permission, including a special loading instruction, will be granted only after all details concerning the load and the loading have been checked and clarified.

14.2 Crushable Cargo Requirements

Where Rigid Cargo has been identified, the first loaded position on the aircraft shall be loaded with Crushable Cargo ULDs suitable for protecting the barrier wall against unrestrained Rigid Cargo.

14.3 Piercing Cargo

Piercing cargo may not be loaded on the first and/or last loaded position on the aircraft.

Loading of pipes, bars, poles or any other long/thin items is allowed only with Cargo Air consent and instructions issued for each particular case.

14.4 Aircraft Engines

Aircraft engines should be loaded in Contour Zone II (Pos. 2 (B) – 9 (J)).

Loading of aircraft engines depends on size and weight. Biggest loadable engine type allowed onboard this aircraft is the CFM56-3.

Permission must be sought from your Special Loads Regional contact before accepting aircraft engines of any type.

14.5 Live Animals

14.5.1 Horses

Max. Number of Horses per Aircraft	14 big horses of up to 665 kg and 21 small horses up to 440 kg of weight due to Boeing limitation of maximum 9,319 kg of live horse weight per flight for B737-300F.
Max. Number of Horses per Box	3
Max. number of Horses per Groom	-
Approved Horse Transport ULDs	Maximum 7 HAJ stalls or 7 charter stalls fixed on the floors with fixed PAG pallets.
Approved Loading Configurations	Configuration 1: Lateral 125”/8” positions.

Notes: When horses are carried, horse attendant may be required to ensure flight safety.

Distance between each two Horse stalls: minimum 8” to allow space for the horse heads for HAJ as HAJ stalls are loaded at 92” length. And 28” to allow space for the horse heads for charter stalls as charter stalls are loaded at 72” length. (Total length of one horse approx. 100”).

UNCONTROLLED DOCUMENT (28 NOVEMBER 2024 15:51:11)

14.5.2 Other Live Animals

The following table provides a list of commonly transported animals. If there is a requirement to transport animals not listed below, contact Network Airside Department.

<table>
<tr><th></th><th>Main-Deck</th><th>FWD Hold</th><th>AFT Hold</th></tr>
<tr><td>Horses</td><td>Max 14-21: Note 1</td><td rowspan="5">No</td><td rowspan="6">No</td></tr>
<tr><td>Day-old chickens</td><td>Yes: Note 2</td></tr>
<tr><td>Monkeys</td><td>X</td></tr>
<tr><td>Pigs</td><td>X</td></tr>
<tr><td>Cattle</td><td>X</td></tr>
<tr><td>Sheep or Goats</td><td>X</td></tr>
<tr><td>Dogs or Cats</td><td>X</td><td rowspan="9">X</td></tr>
<tr><td>Small mammals or Birds</td><td>X</td></tr>
<tr><td>Tropical Fish</td><td>X</td><td>Yes</td></tr>
<tr><td>Reptiles or Amphibians</td><td>X</td><td>No</td></tr>
<tr><td>Eels</td><td>Yes: Note 2</td><td rowspan="2">Yes</td></tr>
<tr><td>Crustaceans or Molluscs</td><td>Yes: Note 2</td></tr>
<tr><td>Bees</td><td>X</td><td>No</td></tr>
<tr><td>Hatching eggs</td><td>Yes: Note 2</td><td>Yes</td></tr>
<tr><td>Insects</td><td>Yes: Note 2</td><td>No</td></tr>
</table>

Note 1: Limited due to air conditioning and accessibility. Only the first container can be accessible, therefore carrying the maximum of 14-21 horses is only possible if horse container(s) can be walked through, which is the type of HAJ placed on a PAG (125 x 88“) pallet where aisle is formed.

Another procedure is to cover the fixed 8 PAG and 1 PEB positions on the main deck with soft board and fix 7 charter stalls or 7 HAJ on the main deck after loading each horse in each stall and closing it. Each HAJ or charter stall will accommodate 2 or 3 horses depending on if they are small from 300 kg to 500 kg each (3 in each stall) or big jumping horses up to 500-600 kg each (2 in each stall). Max weight of horses per Boeing air circulation limit for B737-300F on the main deck in all cargo configuration is 9,319 kg.

Note 2: The temperature requirements for the animal being transported must be entered in the NOTOC. A pre-alert must be sent to **fltops@cargoair.bg** each time a pre-approved animal (marked “Yes” in table) is transported on a Cargoair flight.

X: Depends on accessibility, air conditioning and flight duration. Contact you Special Loads Regional contact for more details.

UNCONTROLLED DOCUMENT (28 NOVEMBER 2024 15:51:11)

UNCONTROLLED DOCUMENT

15. Restricted Commodities Loading

15.1 Radioactive (RRY), Magnetised (MAG) and Cargo Aircraft Only (CAO)

The following Dangerous Good type loading restrictions apply. The Dangerous Good type can be loaded on positions marked with a 'Y'. The Dangerous Good type cannot be loaded on positions marked with a 'N'.

	Position											
	1	2	3	4	5	6	7	8	9	10	FWD	AFT
DG Type	A	B	C	D	E	F	G	H	J	K		
MAG	N	N	N	N	Y	Y	Y	Y	Y	Y	N	Y
CAO	Y	Y	Y	Y	Y	Y	Y	Y	Y	N	Y	Y
RRY (max. 50 TI combined)	N	N	N	Y	Y	Y	Y	Y	Y	Y	N	N
RRY (max. 100 TI combined)	N	N	N	N	N	Y	Y	Y	Y	Y	N	N

Notes:

Cargo Aircraft Only (CAO) can be loaded on any Main Deck position 1(A) to 9(J) provided they are loaded accessible. Accessible means that:

- The CAO is loaded on a pallet
- All positions forward of the CAO are loaded with 88" pallets with aisle

Radioactive material (RRY) loading notes:

- Loading priority is Position 9 and forward.
- Loading of 200TI must be spread evenly between Positions 6 to 10 (Max. 50 TI on each position).
- Excepted Packages of Radioactive Material (**RRE)** and Radioactive Material Category I White **(RRW)** – ALLOWED ON EACH POSITION.

15.2 Dry Ice

Please see the Global Supplementary Operational Document **Dry Ice Consolidation table** for the current maximum allowed Dry Ice limits.

15.3 Dry Ice (ICE) and Live Animals (AVI)

Loading of Dry Ice (ICE) together with Live Animals (AVI) on the Main-deck is forbidden.
As an exception, Dry Ice (ICE) may be loaded together with Beneficial Insects (AVI) on the Main-deck. Please notify Cargo Air OCC with the flight details on which these shipments will be uplifted by contacting **fltops@cargoair.bg**.

15.4 Maximum Dry Ice Allowed on LEJ-GVA-LEJ Sector*

SPECIFIC CASE: According to Report CGF003/15.05.2013 concerning flights on route LEJ-GVA-LEJ the average sublimation rate after the tests performed was determined to be 1% per hour. The following limitations will apply for this particular rotation:

	Max. ICE allowed in Kilograms			
	Main-deck	**FWD Hold**	**AFT Hold**	**Combined Total**
Normal operation	3219	899	1167	5285
Single A/C pack operation	1610	450	584	2644

* Same limitations shall apply for other shipments of packed dry ice where the sublimation rate of ≤ 1% per hour was determined after tests or proven by shipper.

UNCONTROLLED DOCUMENT (28 NOVEMBER 2024 15:51:11)

UNCONTROLLED DOCUMENT

15.5 Addition precautions for the loading/unloading of Dry Ice (ICE)

(a) Prior to entering any compartment in which a large amount of dry ice has been loaded, ensure adequate ventilation is provided to that compartment with the use of air conditioning packs, ground carts, or by opening the respective main cargo door for the Main Cargo door, the forward lower hold cargo door or aft lower hold cargo door and leave it open for at least 5 minutes to allow fresh air inside.

(b) Do not load animals in the same cargo compartment with ice or in the lower cargo compartment when a large amount of dry ice is carried in the main deck cargo compartment.

(c) All air conditioning packs (or equivalent ground cart ventilation) should be operating at all times while persons are on board an airplane transporting dry ice.

(d) Avoid storing dry ice on airplanes for extended periods of time unless adequate and continuous ventilation is provided.

(e) The flight crew must be notified of the carriage of dry ice.

15.6 Lithium Batteries

Please see the Global Supplementary Operational Document **Lithium Battery Loadability Consolidation Table** for the current UN3480 Section IA/IB (RBI), UN3090 Section IA/IB (RBM), UN3481 Section I (RLI), UN3091 Section I (RLM) load ability limits

UNCONTROLLED DOCUMENT

UNCONTROLLED DOCUMENT

UNCONTROLLED DOCUMENT (28 NOVEMBER 2024 15:51:11)

UNCONTROLLED DOCUMENT

16. Messaging and Reporting

16.1 Messaging

Standard messaging rules apply.

Add to all messages **fltops@cargoair.bg**

16.2 Reporting

Standard reporting rules apply.

UNCONTROLLED DOCUMENT

UNCONTROLLED DOCUMENT

UNCONTROLLED DOCUMENT (28 NOVEMBER 2024 15:51:11)

UNCONTROLLED DOCUMENT

17. Load Control Data

17.1 Standard Mass Additions

17.1.1 Additional Crew Members (ACM)

Maximum Number of ACMs:	4
Mass of ACM:	90 kg

Note: Any ACMs shall be planned in SABLE in the following order:

- The two 9G barrier seats
- The two forward gallery seats
- The cockpit observer seat (Only to be used for CargoAir crew members)

Some CargoAir aircraft have a second cockpit observer seat, CargoAir will advise EU NCC directly if and when this seat is utilized.

17.1.2 Fly Away Kit (FAK) and Ballast

Fly Away Kit (FAK):	156kg Comp.4 (not included in the DOM/DOI)

Note: As a standard above mentioned weights have to be used. If operator (or maintenance provider) adds or removes parts resulting in weight adjustments to the FAK or ballast, the overall responsibility shall be to the operator and their OCC to inform the respective station by email notification. However, it is also the responsibility of the ramp supervisor to verify on every flight and report major visible discrepancies to NCG.

Ballast: Not standard, but often required for ferry flights and then to be planned as additional weight as not included in the DOW/DOI.

Above or adjusted weights must be added in Sable and on the Load Plan by Load Control for every flight and verified by the Ramp Team.

17.2 Minimum Fuel and Standard Taxi Fuel

Minimum Fuel:	2,500 kg (3,500 kg for ferry flight configuration)
Standard Taxi Fuel:	200 kg

17.3 LMC Restrictions

Computer Load sheet Maximum LMC:	+/- 350 kg
Manual Load sheet Maximum LMC:	+/- 350 kg

17.4 Minimum Flight Weight

Minimum flight weight: 35,380 kg

UNCONTROLLED DOCUMENT (28 NOVEMBER 2024 15:51:11)

18. Maximum Package Dimensions

18.1 Main Cargo Door

FORWARD PALLET UPRIGHT LOADING THROUGH MAIN CARGO DOOR

	WIDTH (IN.)												
	5	15	25	35	45	55	65	75	85	95	105	115	125
HEIGHT (IN.)	LENGTH (IN.)												
83	190	190	190	190	181	164	151						
80	190	190	190	190	190	181	165	152					
76	190	190	190	190	190	190	181	166	153				
72	190	190	190	190	190	190	190	178	164	152			
68	190	190	190	190	190	190	190	188	172	158			
64	190	190	190	190	190	190	190	190	180	165	153		
60	190	190	190	190	190	190	190	190	187	171	158	147	
56	190	190	190	190	190	190	190	190	190	176	162	151	
52	190	190	190	190	190	190	190	190	190	180	165	153	137
48	190	190	190	190	190	190	190	190	190	180	165	153	137
44	190	190	190	190	190	190	190	190	190	180	165	153	137
40	190	190	190	190	190	190	190	190	190	180	165	153	137
36	190	190	190	190	190	190	190	190	190	180	165	153	137
32	190	190	190	190	190	190	190	190	190	180	165	153	137
28	190	190	190	190	190	190	190	190	190	180	165	153	137
24	190	190	190	190	190	190	190	190	190	180	165	153	137
20	190	190	190	190	190	190	190	190	190	180	165	153	137
16	190	190	190	190	190	190	190	190	190	180	165	153	137
12	190	190	190	190	190	190	190	190	190	180	165	153	137
8	190	190	190	190	190	190	190	190	190	180	165	153	137
4	190	190	190	190	190	190	190	190	190	180	165	153	137
2	190	190	190	190	190	190	190	190	190	180	165	153	137

NOTE: Subtract roller height and pallet thickness if applicable.

UNCONTROLLED DOCUMENT
UNCONTROLLED DOCUMENT

UNCONTROLLED DOCUMENT (28 NOVEMBER 2024 15:51:11)

UNCONTROLLED DOCUMENT

18.2 Forward Lower-deck hold

LIGHT PACKAGES HAND MANEUVERED[a]									
HEIGHT IN.	WIDTH IN.								
	5	10	15	20	25	30	35	40	45
	LENGTH IN.								
5	175	143	121	106	95	84	74	65	58
10	155	132	116	105	95	84	74	65	58
12	150	130	116	105	95	84	74	65	58
14	147	129	115	105	95	84	74	65	58
16	144	127	115	105	95	84	74	65	58
18	142	126	115	105	95	84	74	65	58
20	140	126	115	105	95	84	74	65	58
22	139	125	115	105	95	84	74	65	58
24	138	125	115	105	95	84	74	65	58
26	137	125	115	105	95	84	74	65	58
28	137	125	115	105	95	84	74	65	58
30	136	125	115	105	95	84	74	65	58
32	136	125	115	105	95	84	74	65	58
34	136	125	115	105	95	84	74	65	58

[a] Package length is limited to a maximum of 85 inches when transverse cargo nets are installed.

18.3 Aft lower-deck hold

LIGHT PACKAGES HAND MANEUVERED[a]									
HEIGHT IN.	WIDTH IN.								
	5	10	15	20	25	30	35	40	45
	LENGTH IN.								
5	247	184	147	123	106	93	83	73	65
10	192	157	133	116	104	93	83	73	65
12	182	151	130	115	104	93	83	73	65
14	174	147	128	114	104	93	83	73	65
16	168	144	127	114	104	93	83	73	65
18	164	142	126	114	104	93	83	73	65
20	160	140	125	114	104	93	83	73	65
22	157	138	124	114	104	93	83	73	65
24	155	137	124	114	104	93	83	73	65
26	153	137	124	114	104	93	83	73	65
28	152	136	124	114	104	93	83	73	65
30	151	135	124	114	104	93	83	73	65
32	150	135	124	114					
34	149	135	124	114					

[a] Package length is limited to a maximum of 161 inches when transverse cargo nets are installed.

Note: Multiply numbers by 2.54 to get centimetres.

UNCONTROLLED DOCUMENT (28 NOVEMBER 2024 15:51:11)