UNCONTROLLED DOCUMENT

UNCONTROLLED DOCUMENT

CGF B738SF
Cargo Air B737-800SF

Revision: 4
Date: 11 October 2024

1 Cargo Air Boeing 737-800SF Registrations
2 Aircraft Servicing Points and Specifications
3 Ground Support Equipment
4 Safety Cone Placement for Aircraft with Split Winglets
5 Standard Turnaround Times
6 Safety Areas
7 Strong Wind Conditions
8 Aircraft Door Dimensions
9 Compartment Classification and Air-Conditioning
10 Aircraft Cabin Contour Dimensions
11 Maximum Position Weights
12 Aircraft ULD Compatibility
13 Loading and Un-Loading
14 Rigid, Oversized and Special Loads
15 Restricted Commodities Loading
16 Messaging and Reporting
17 Load Control Data
18 Maximum Package Dimensions

UNCONTROLLED DOCUMENT (11 OCTOBER 2024 16:16:23)

Page	Date	Comment
17	11 October 2024	Additional Operating instructions for engaging the MCD door sill protector and the protecting guides on the forward and aft edges of the door sill protector.

UNCONTROLLED DOCUMENT

UNCONTROLLED DOCUMENT

UNCONTROLLED DOCUMENT

1. Cargo Air Boeing 737-800SF Registration

IATA Designator: -

ICAO Designator: **CGF**

Valid for: **LZCGA, LZCGB, LZCGC, LZCGD, LZCGE**

1.1 Aircraft Dimensions

All dimensions in meters

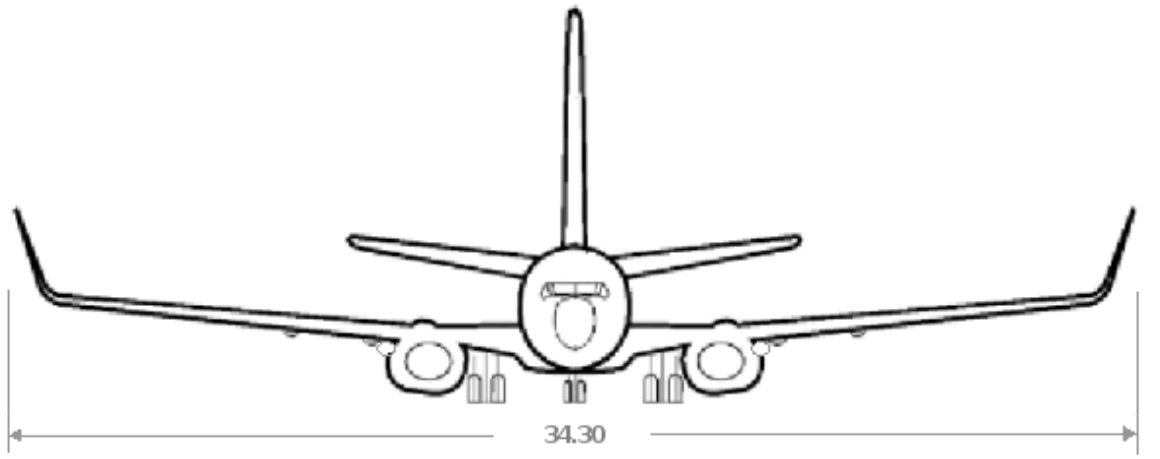

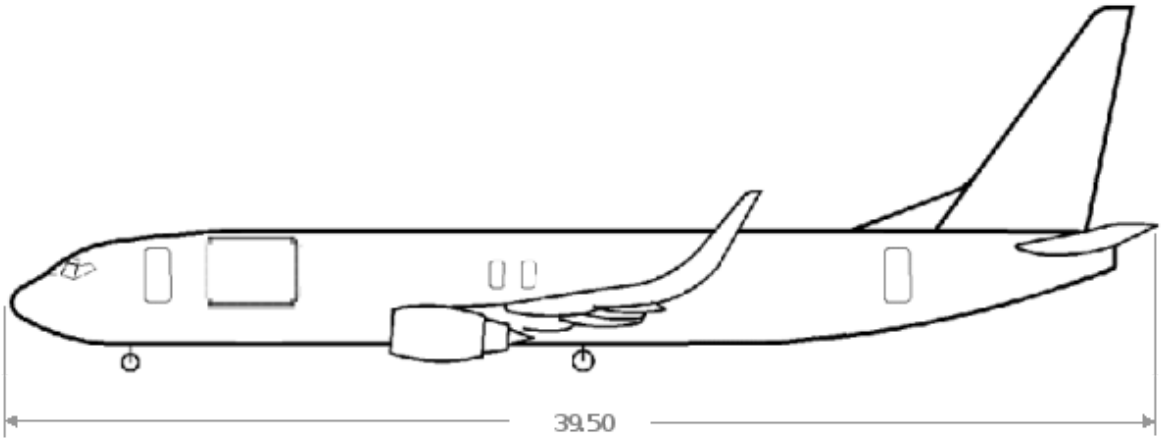

UNCONTROLLED DOCUMENT

UNCONTROLLED DOCUMENT

UNCONTROLLED DOCUMENT

UNCONTROLLED DOCUMENT

2. Aircraft Servicing Points and Specifications

2.1 Servicing Points

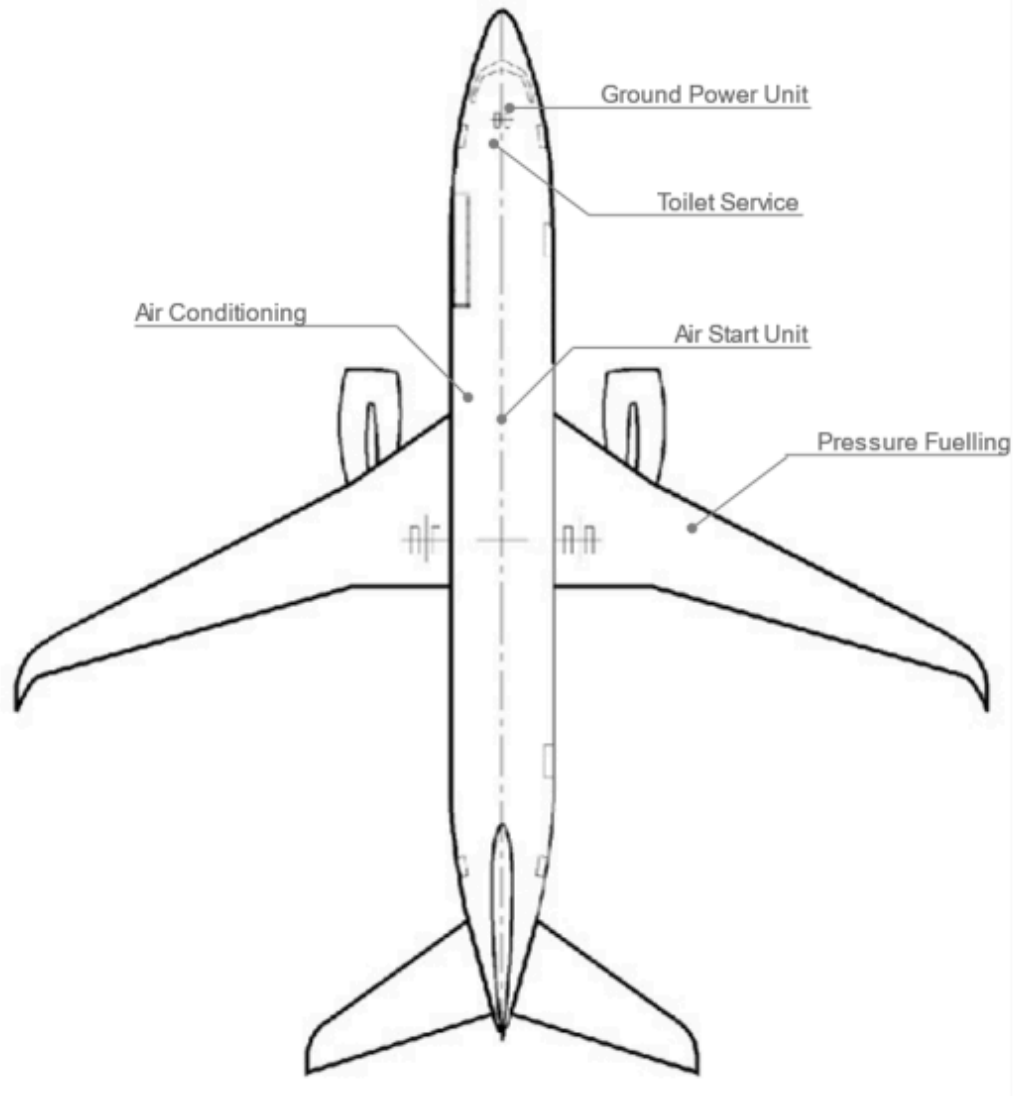

2.2 Servicing Specifications

System	Requirements	Notes
Ground Power Unit	115/200V AC / 60 kVA / 400 Hz	
Fuel	Jet A1	Fuel Control Panel **on RH wing only** **Fuel panel measurements in KG**
Air Condition Unit	Maximum Flow Rate 210 ppm	1 ACU inlet available
Air Start Unit	Minimum Capacity 120-145 ppm Max. / Min. pressure 45 / 30 psi	1 ASU inlet available.

UNCONTROLLED DOCUMENT (11 OCTOBER 2024 16:16:23)

UNCONTROLLED DOCUMENT

3. Ground Support Equipment

3.1 Positioning of GSE

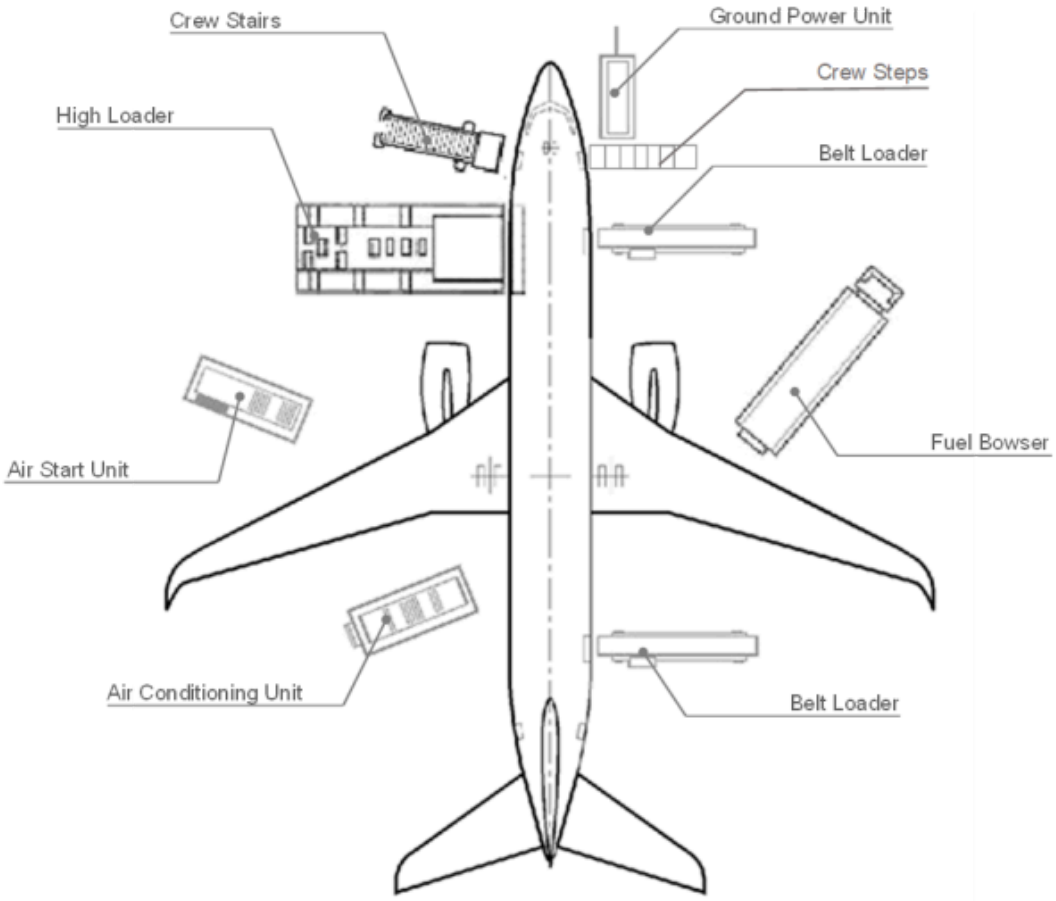

3.2 GSE Requirements

GSE	Type	Quantity
High Loader	Standard	1
Crew stairs	Platform height 2.62 – 2.77 meters	1
Ground Power Unit	Diesel, Electric or Ground-Power	1
Air Start Unit	Standard	1
Belt Loader	Standard	1 or 2
Tractor	N/A	4
Dolly Wagon Main-deck	125”/88” & 60.5”/61.4” capable	Up to 11
Belly Container / Wagon	As required	According to load

UNCONTROLLED DOCUMENT (11 OCTOBER 2024 16:16:23)

4. Safety Cone Placement for Aircraft with Split Winglets

Aircraft registration **LZCGD** is equipped with split winglets. In addition to standard coning at the tip, tail, and engines of the aircraft, two safety cones shall be placed at the wingtips; one before and one behind the split winglets as indicated in the diagrams below. This is to increase awareness to ground handling staff of the extremities of the aircraft and prevent collision with GSE.

Note: Cargo Air crew may install additional head lights on the safety cones during night conditions to increase visibility of the safety cones.

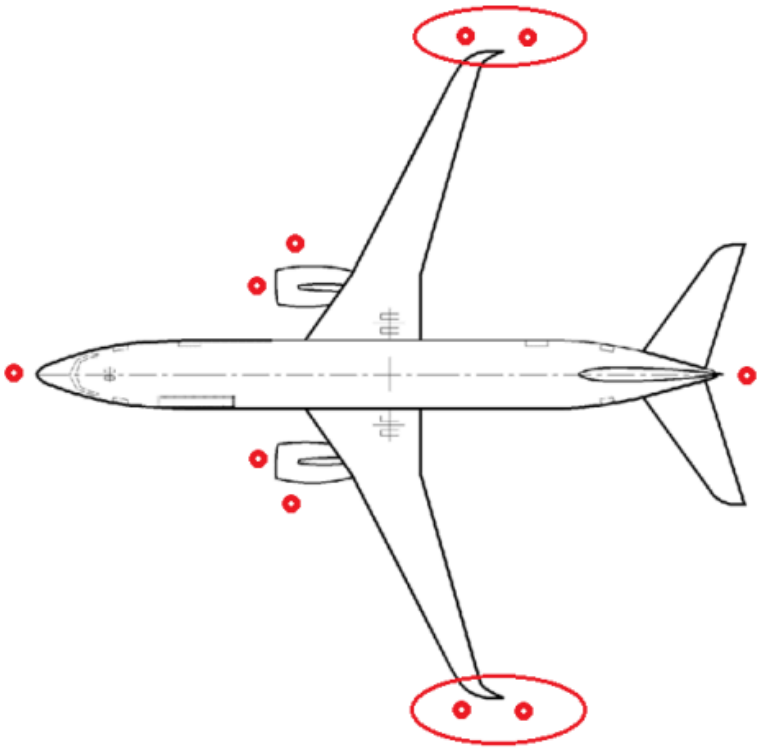

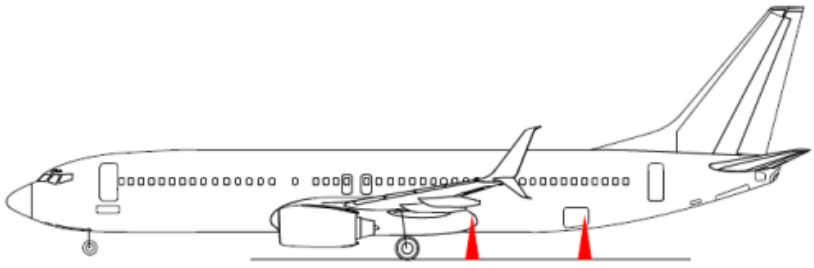

UNCONTROLLED DOCUMENT
UNCONTROLLED DOCUMENT

5. Standard Turnaround Times

Turn-around time for a transit stop: 00:35 hour (partial off- and on-load)

Turn-around time for an end stop: 00:50 hour (full off- and on-load)

UNCONTROLLED DOCUMENT
UNCONTROLLED DOCUMENT

UNCONTROLLED DOCUMENT

6. Safety Areas

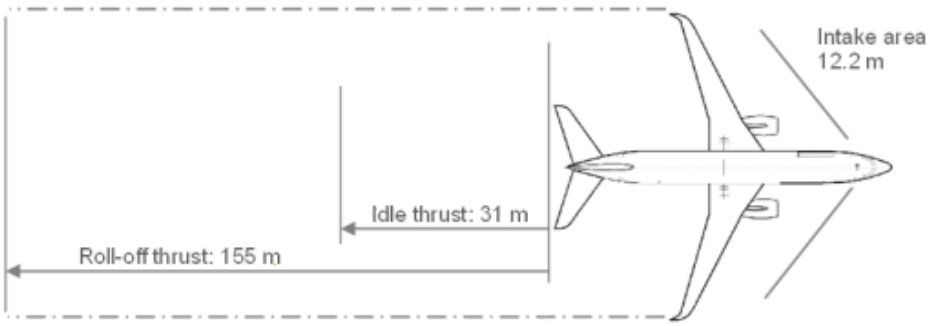

UNCONTROLLED DOCUMENT

UNCONTROLLED DOCUMENT

UNCONTROLLED DOCUMENT (11 OCTOBER 2024 16:16:23)

UNCONTROLLED DOCUMENT

7. Strong Wind Conditions

If the wind conditions on the ramp reach the following speeds, the corresponding actions shall be taken.

Wind Speed	Action
Up to 45 knots	Normal Operations: All doors can be opened and left open
More than 45 knots	Do not open additional doors
More than 45 knots	All open doors shall be closed immediately

UNCONTROLLED DOCUMENT

UNCONTROLLED DOCUMENT

UNCONTROLLED DOCUMENT (11 OCTOBER 2024 16:16:23)

8. Aircraft Door Dimensions

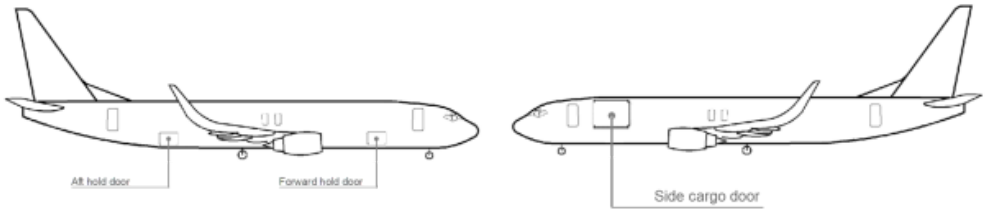

Door width, height, and sill height are defined as follows.

(This drawing is for illustration purposes only and may not be an exact representation of this aircraft type)

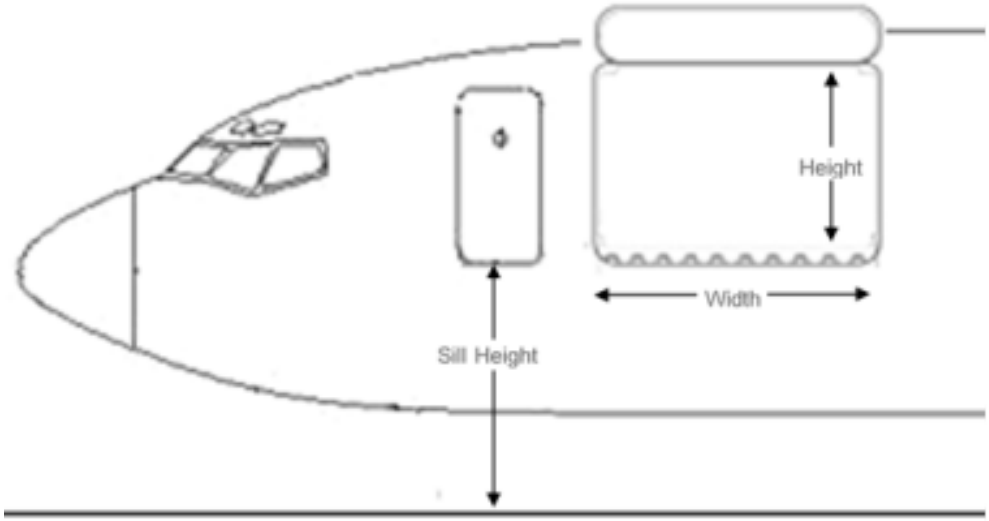

Dimensions are in Centimetres (cm) and Inches (in).

Door	Door Width (cm)	Door Height (cm)	Min. Door Sill Height (in)	Max. Door Sill Height (in)
Crew Door	-	-	103	109
Main Deck	340	210	104	110
Forward Hold	121	88	50	55
Aft Hold	121	88	54	54

UNCONTROLLED DOCUMENT
UNCONTROLLED DOCUMENT

UNCONTROLLED DOCUMENT

9. Compartment Classification and Air-Conditioning

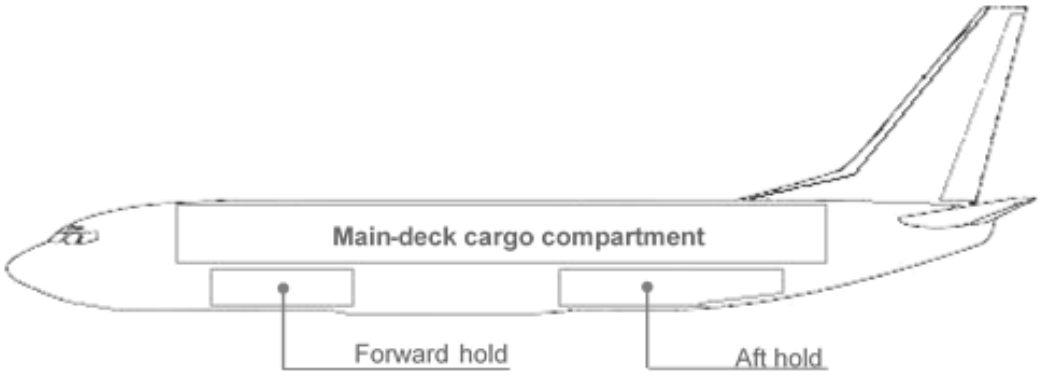

9.1 Compartment Classification

Compartment		Features
Main-deck	Position 1 loaded with ULD without aisle	- Classification **E**
		- Pressurisation
		- Smoke Detection
		- Shut off valve for ventilation air flow for fire suppression controlled by cockpit
		In-accessible during flight
	Position 1 loaded with ULD with aisle	- Classification **B**
		- Pressurisation
		- Smoke Detection
		- Shut off valve for ventilation air flow for fire suppression controlled by cockpit
		Accessible during flight
Lower-deck All Compartments		- Classification **C**
		- Pressurisation
		- Smoke Detection
		- Fire Suppression controlled by cockpit
		- **In-accessible** during flight

9.2 Air-Conditioning

	Main-deck	Forward Hold	Aft Hold
Temperature	18 C to 30 C	Max 3C*	Max 3C*
Heating	Yes	No	
Heat adjust			
Cooling			
Ventilation		Yes	No

UNCONTROLLED DOCUMENT (11 OCTOBER 2024 16:16:23)

UNCONTROLLED DOCUMENT

10. Aircraft Cabin Contour Dimensions

10.1 Aircraft Layout

The aircraft is divided into three contour zones: CI, CII and CIII.

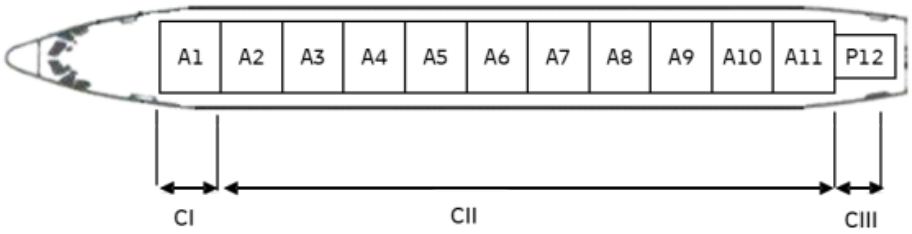

10.1.1 Contour CI

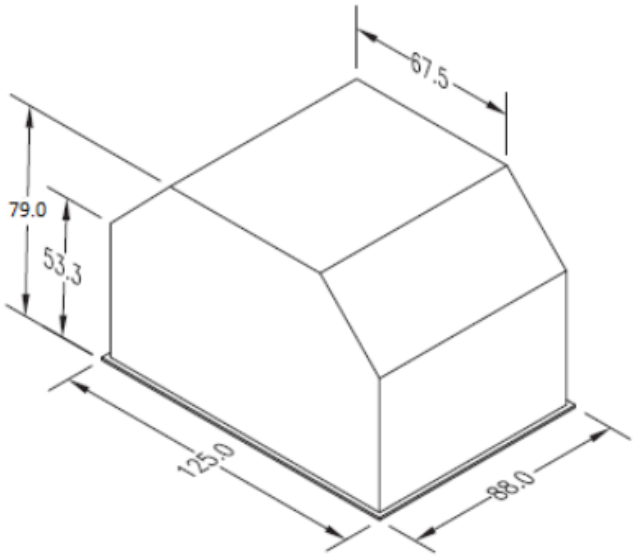

UNCONTROLLED DOCUMENT

UNCONTROLLED DOCUMENT (11 OCTOBER 2024 16:16:23)

UNCONTROLLED DOCUMENT

UNCONTROLLED DOCUMENT

10.1.2 Contour CII

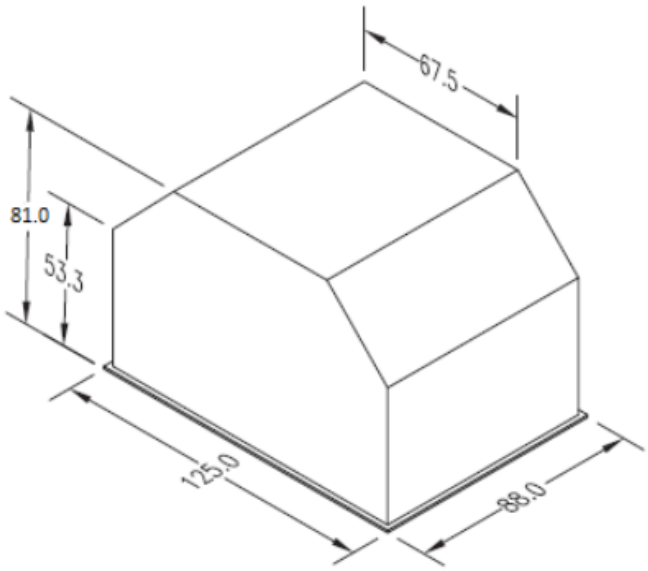

10.1.3 Contour CIII

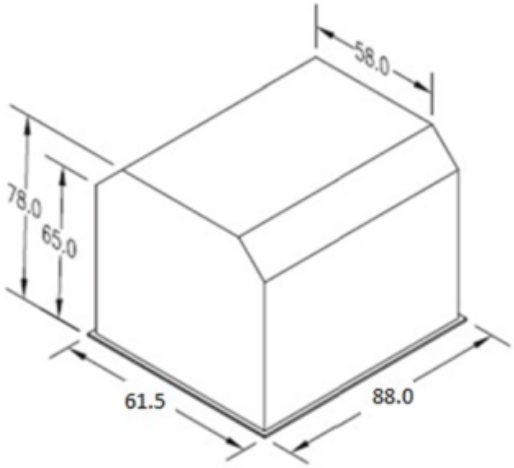

UNCONTROLLED DOCUMENT

UNCONTROLLED DOCUMENT (11 OCTOBER 2024 16:16:23)

UNCONTROLLED DOCUMENT

11. Maximum Position Weights

11.1 Maximum Main-deck ULD Weights in Kilograms

	ULD Position (Max. weight in Kilograms)											
ULD Size	A1	A2	A3	A4	A5	A6	A7	A8	A9	A10	A11	P12
125”/ 88”	1814	2948			3628		2948				1814	
53"/88"												1133

11.2 Maximum Total Main-deck Load

9G Barrier Limit: 24,494 Kg

11.3 Maximum Lower-deck Compartment Weights in Kilograms

Valid for registrations LZCGA only:

	Fwd hold		Aft Hold	
Compartment	1	2	3	4
Max. Weight (Kg)	888	2670	4086	763
Max. Hold Weight (Kg)	3558		4849	
Volume (m3)	4.40	14.60	20.75	4.25

Valid for registrations LZCGB, LZCGC, LZCGD:

	Fwd hold		Aft Hold	
Compartment	1	2	3	4
Max. Weight (Kg)	888	2670	3777	667
Max. Hold Weight (Kg)	3539		4444	
Volume (m3)	4.40	14.60	20.75	4.25

UNCONTROLLED DOCUMENT (11 OCTOBER 2024 16:16:23)

UNCONTROLLED DOCUMENT

12. Aircraft ULD Compatibility

12.1 Aircraft Configurations

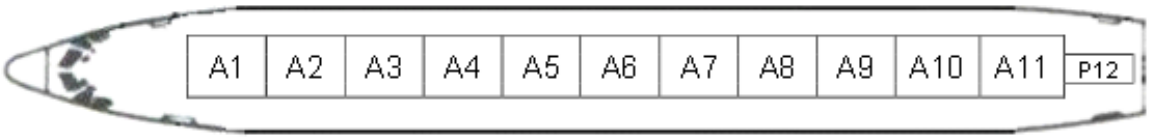

Configuration1: 11 x Lateral 125”/88” and 1 x 53”/88”

12.2 ULD Compatibility Table

The following ULD type loading restrictions apply. The ULD type can be loaded on positions marked with a ‘Y’. The ULD type cannot be loaded on positions marked with a ‘N’.

		ULD Type																		
	Pos	AAA	AAC	AAJ	AEH	AEP	AKE	AKN	AYY	LAK	LAY	PAG	PAH	PAJ	PAP	PEA	PEB	P1P	RKN	RKE
Configuration 1	A1	Y	Y1	Y	N	N	N	N	N	Y	Y	Y	Y	Y	Y	N	N	Y	N	N
	A2	Y	Y1	Y	N	N	N	N	N	Y	Y	Y	Y	Y	Y	N	N	Y	N	N
	A3	Y	Y1	Y	N	N	N	N	N	Y	Y	Y	Y	Y	Y	N	N	Y	N	N
	A4	Y	Y1	Y	N	N	N	N	N	Y	Y	Y	Y	Y	Y	N	N	Y	N	N
	A5	Y	Y1	Y	N	N	N	N	N	Y	Y	Y	Y	Y	Y	N	N	Y	N	N
	A6	Y	Y1	Y	N	N	N	N	N	Y	Y	Y	Y	Y	Y	N	N	Y	N	N
	A7	Y	Y1	Y	N	N	N	N	N	Y	Y	Y	Y	Y	Y	N	N	Y	N	N
	A8	Y	Y1	Y	N	N	N	N	N	Y	Y	Y	Y	Y	Y	N	N	Y	N	N
	A9	Y	Y1	Y	N	N	N	N	N	Y	Y	Y	Y	Y	Y	N	N	Y	N	N
	A10	Y	Y1	Y	N	N	N	N	N	Y	Y	Y	Y	Y	Y	N	N	Y	N	N
	A11	Y	Y1	Y	N	N	N	N	N	Y	Y	Y	Y	Y	Y	N	N	Y	N	N
	P12	N	N	N	Y	Y	Y	Y	Y	N	N	N	N	N	N	Y	Y	N	Y	Y

Y1: Only AAC serial range 9021 and higher allowed

Notes:

- When loading position A11, load containers with the door/net facing forward.
- The standard lock arrangement for position P12 is for a 61.5”/60.4” base ULD. A lock change is required to load a 53”/88” ULD.
- Pallet stacks not allowed on position A11

UNCONTROLLED DOCUMENT (11 OCTOBER 2024 16:16:23)

UNCONTROLLED DOCUMENT

13. Loading and Un-Loading

13.1 Un-Loading Sequence

Step 1: Un-load the aft lower deck.

Step 2: Un-load the ULDs on the main deck in the following numbered sequence, **and respect standard stage un-loading method**.

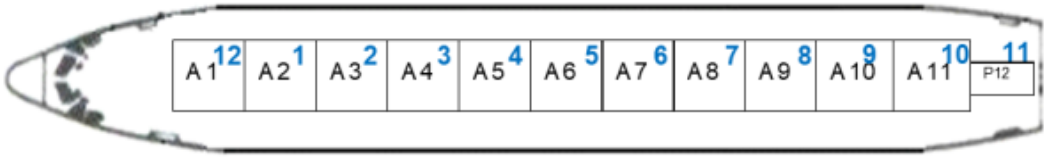

Step 3: Un-load the forward lower deck.

Note 1: The main-deck and aft lower deck shall not be un-loaded simultaneously.

Note 2: ULDs must be “stage un-loaded”. Stage un-loading is where a ULD is held in the doorway as a counter ballast until the next ULD to be un-loaded has been moved to position 4, where it is available to replace the ULD held in the doorway.

Note 3: The main-deck and forward lower deck Hold 2 may be un-loaded simultaneously provided the counter-balance requirements in Counter-ballast are strictly followed.

13.2 Loading Sequence

Step 1: Load the forward lower deck.

Step 2: Load the ULDs on the main deck in the following numbered sequence, **and respect standard stage loading method**.

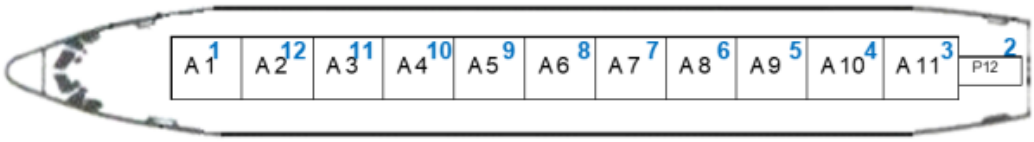

Step 3: Load the aft lower deck.

Note 1: The main-deck and aft lower deck shall not be loaded simultaneously.

Note 2: ULDs must be “stage loaded”. Stage loading is where a ULD is held in the doorway as a counter ballast until the previous ULD has been pushed aft into its final position. A ULD shall not be moved aft past position 4 until the subsequent ULD has been moved from the high-loader into the doorway position.

Note 3: The main-deck and forward lower deck Hold 2 may be loaded simultaneously provided the counter-balance requirements in Counter-ballast are strictly followed.

UNCONTROLLED DOCUMENT (11 OCTOBER 2024 16:16:23)

UNCONTROLLED DOCUMENT

13.3 Loading Notes

13.3.1 Counter-ballast

To provide counter-balance during loading and offloading, **a minimum of 1100kg is required in Position A1 in case the Main Deck Total Load is in excess of 11.000 kg.** Below that figure, a minimum of 10% of the Main Deck Total Load must be loaded in Position A1 to provide counter-balance.

13.3.2 Tail-Tipping

The B737-800SF is susceptible to tail-tipping, and care must be taken whilst un-loading and loading the aircraft to prevent the Centre of Gravity moving to a position that would result in tail-tipping. Following the prescribed un-loading and loading sequence is therefore of paramount importance. Furthermore, care must be taken whilst loading the ULDs on the main-deck, moving them at a moderate pace up and down the aircraft to prevent a sudden CoG shift, which may result in a tail-tip situation.

Tipping is generally not a concern for 737-800 airplanes if good judgement is exercised in maintaining airplane stability during ground operations. Effects of towing and ground operations on the airplane Centre of Gravity must be considered. The absolute tipping limit for the 737-800 airplane is at 50.8% MAC, considerably aft of the ground stability limit.

13.3.3 Parallel dolly train unload

Due to the limited clearance under the wing, parallel dolly – train un-load is not allowed on this aircraft type.

13.3.4 ULD Clearance

There is very limited clearance between some ULDs and the inner roof lining on this aircraft. ULDs, AAA and AAC/LAY especially, which are even slightly out of contour will impact the roof lining and cause damage. Due care must therefore be exercised when un-loading and loading this aircraft.

13.3.5 Loading height restrictions on Lower Decks



When loading the lower deck, a 5cm / 2” clearance must be respected between the top of the freight profile and the ceiling of the lower-deck hold. Marking inside the holds indicate the maximum loading height of the freight build and these markings must be respected at all times.

UNCONTROLLED DOCUMENT

UNCONTROLLED DOCUMENT

UNCONTROLLED DOCUMENT (11 OCTOBER 2024 16:16:24)

UNCONTROLLED DOCUMENT

13.3.6 Additional Operating Instructions for Door Sill Protector

A door sill protector with protecting guides is installed on the Main Cargo Door of this aircraft. The protecting guides on the forward and aft edges of the door sill protector are there to protect the aircraft door frame from being hit by ULDs during Loading and Un-Loading.

After opening the Main Cargo Door, the High-Loader operator shall:

1. Engage each half of the door sill protector by pulling up on the red Release handles and lowering it to the horizontal position.

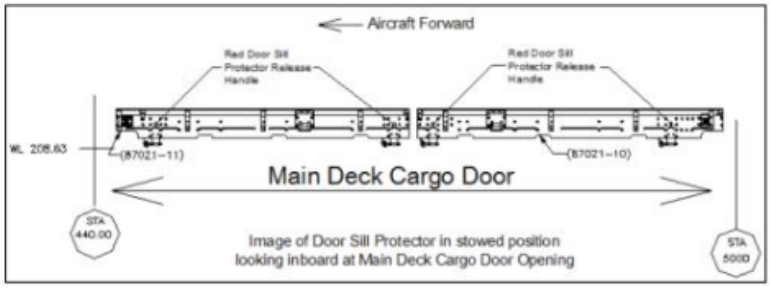

2. Raise the forward and aft protecting guides on the door sill protector.
3. Raise the rollout stops on the door sill protector.

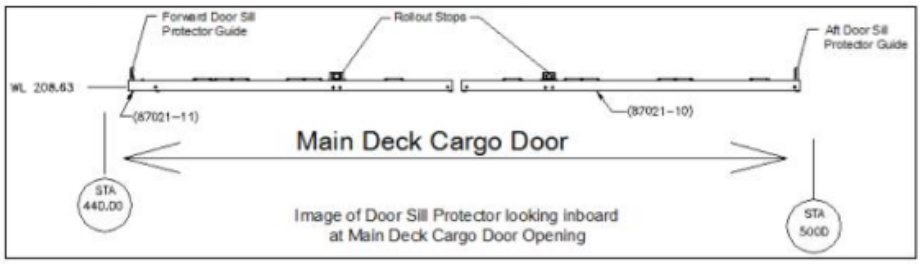

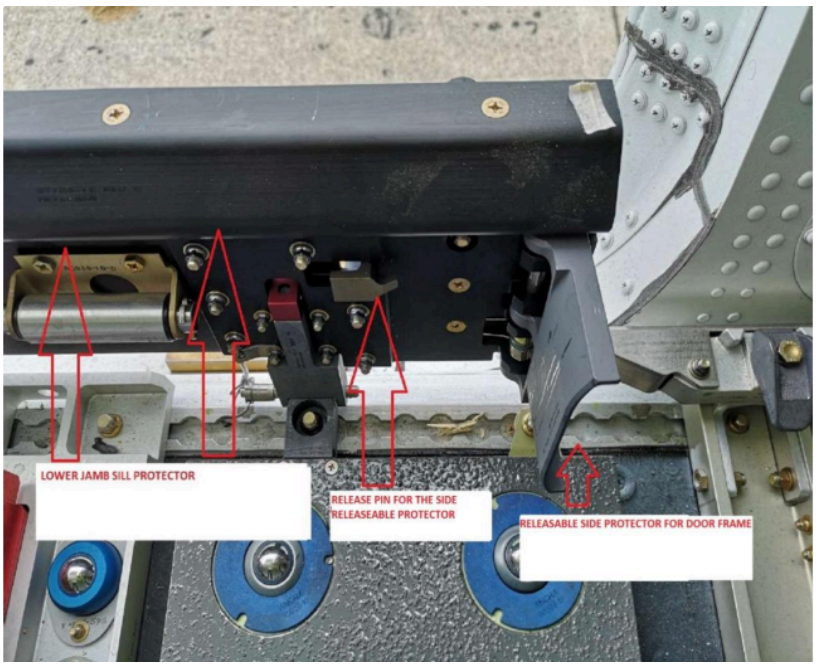

UNCONTROLLED DOCUMENT (11 OCTOBER 2024 16:16:24)

14. Rigid, Oversized and Special Loads

For guidance on the handling of special loads, please refer to the Special Loads Regional Contact Instructions outlined in Chapter 6 **6.12.22.3 - Determining Loadability of Special Loads**. Where direct operator approval is required, the Regional Airside Team will liaise with Global Airside as needed.

14.1 Floating / Heavy Pallets

ULDs which are heavier than the standard allowed maximum gross weight may be loaded on the main deck on a floating position.

Permission must be sought from the operator before accepting any ULDs which require loading on a floating position.

The permission, including a special loading instruction, will be granted only after all details concerning the load and the loading have been checked and clarified.

14.2 Crushable Cargo Requirements

Where Rigid Cargo has been identified, the first loaded position on the aircraft shall be loaded with Crushable Cargo ULDs suitable for protecting the barrier wall against unrestrained Rigid Cargo.

When carrying rigid cargo weighing a total of 10,000 lb or more, positions A and B must be loaded with Crushable Cargo ULDs suitable for protecting the barrier wall against unrestrained Rigid Cargo.

14.3 Piercing Cargo

Piercing cargo may not be loaded on the first and last loaded position on the aircraft.

14.4 Aircraft Engines

Aircraft engines should be loaded in Contour staring from Pos. 1 to Pos. 11 on the B737-800F.

Loading of aircraft engines depends on size and weight. Biggest loadable engine type allowed on board this aircraft is CFM56-3.

Permission must be sought from your Special loads Regional contact before accepting aircraft engines.

14.5 Live Animals

14.5.1 Horses

Max. Number of Horses per Aircraft	18 Large horses and 27 small horses (see notes below)
Max. Number of Horses per Box	3
Max. number of Horses per Groom	When horses are carried, horse attendant may be required to ensure safety of flight.
Approved Horse Transport ULDs	HAJ 92 (L) x 84 (W) x 73 (H) or special charter stall with dims 96 x 72 “base and 64” height.
Approved Loading Configurations	Config. A

Notes: Maximum number of horses allowed is 18 big horses of up to 800-900 kg (where such limitation is not limiting factor as the biggest horses are 500-600 kg each) and 27 small horses up to 780 kg (where the smallest horses are 300-400 kg each so this is not the limiting factor) of weight as the Boeing limitation of maximum 21,286 kg of live horse weight per flight for B737-800F.

UNCONTROLLED DOCUMENT (11 OCTOBER 2024 16:16:24)

UNCONTROLLED DOCUMENT

Maximum 9 HAJ stalls or 8 charter stalls fixed on the floors with fixed PAG pallets. Distance between each two stalls: minimum 8 “to allow space for the horse heads for HAJ as HAJ stalls are loaded 92” length. And 28” to allow space for the horse heads for charter (Total length of one horse approx. 100”).

Cargo Air may use other types of certified containers or stalls for carriage of horses as long as they fit in B737-800F.

Specific recommendation: Airstable type HMA with drop top could be used for walking in and out the horses in the horse ULD or special open or closed top ramp can be used for this purpose. For full instructions for each flight please contact Cargo Air (Ground Operations at **sales@cargoair.bg**) and such customized instruction will be issued for each specific flight.

14.5.2 Other Live Animals

The following table provides a list of commonly transported animals. If there is a requirement to transport animals not listed below, contact your Special Loads Regional contact.

<table>
<tr><th></th><th>Main-Deck</th><th>FWD Hold</th><th>AFT Hold</th></tr>
<tr><td>Horses</td><td>Max 18-27: Note 1</td><td rowspan="5">No</td><td rowspan="8">No</td></tr>
<tr><td>Day-old chickens</td><td>Yes: Note 2</td></tr>
<tr><td>Monkeys</td><td>X</td></tr>
<tr><td>Pigs</td><td>X</td></tr>
<tr><td>Cattle</td><td>X</td></tr>
<tr><td>Sheep or Goats</td><td>X</td><td rowspan="10">X</td></tr>
<tr><td>Dogs or Cats</td><td>X</td></tr>
<tr><td>Small mammals or Birds</td><td>X</td></tr>
<tr><td>Tropical Fish</td><td>X</td><td>Yes</td></tr>
<tr><td>Reptiles or Amphibians</td><td>X</td><td>No</td></tr>
<tr><td>Eels</td><td>Yes: Note 2</td><td rowspan="2">Yes</td></tr>
<tr><td>Crustaceans or Molluscs</td><td>Yes: Note 2</td></tr>
<tr><td>Bees</td><td>X</td><td>No</td></tr>
<tr><td>Hatching eggs</td><td>Yes: Note 2</td><td>Yes</td></tr>
<tr><td>Insects</td><td>Yes: Note 2</td><td>No</td></tr>
</table>

Note 1: Limited due to air conditioning and accessibility. Only the first container can be accessible, therefore carrying the maximum of 18-27 horses is only possible if horse container (s) can be walked through, which is the type that HAJ placed on PAG (125 x 88”) pallet where aisle is formed.

Another procedure is to cover the fixed 11 PAG and 1 PEB positions on the main deck with soft board and fix 9 charter stalls or 9 HAJ on the main deck after loading each horse in each stall and closing it. Each HAJ or charter stall will accommodate 2 or 3 horses depending on if they are small from 300 kg to 500 kg (3 in each stall) or big jumping horses up to 500 kg – 600 kg each (2 in each stall). Max weight of horses per Boeing air circulation limit for B737-800F on the main deck in all cargo configuration is 21, 286 kg, so the above limitations of 18 – 27 horses as per the weight and volume of horses is on the safe side from air circulation limitation point of view.

Note 2: The temperature requirements for the animal being transported must be entered in the NOTOC. A pre-alert must be sent to **fltops@cargoair.bg** each time a pre-approved animal (marked “Yes” in table) is transported on a Cargoair flight.

X: Depends on accessibility, air conditioning and flight duration. Contact your Special Loads Regional contact for more details.

UNCONTROLLED DOCUMENT (11 OCTOBER 2024 16:16:24)

UNCONTROLLED DOCUMENT

15. Restricted Commodities Loading

15.1 Radioactive (RRY), Magnetised (MAG) and Cargo Aircraft Only (CAO)

The following Dangerous Good type loading restrictions apply. The Dangerous Good type can be loaded on positions marked with a 'Y'. The Dangerous Good type cannot be loaded on positions marked with a 'N'.

	Position													
DG Type	A1	A2	A3	A4	A5	A6	A7	A8	A9	A10	A11	P12	FWD	AFT
MAG	N	N	N	N	N	N	N	N	N	N	N	Y	N	N
CAO	Y	Y	Y	Y	Y	Y	Y	Y	Y	Y	Y	N	Y	Y
RRY (max. 50 TI combined)	N	N	N	N	Y	Y	Y	Y	Y	Y	Y	Y	N	N
RRY (max. 200 TI combined)	N	N	N	N	N	N	Y	Y	Y	Y	Y	Y	N	N

Notes: Cargo Aircraft Only (CAO) can be loaded on any Main Deck position to A11 provided they are loaded accessible. Accessible means that:

- The CAO is loaded on a pallet
- All positions forward of the CAO are loaded with 88" pallets with aisle

When loading RRY the loading priority is position 11 and forward. Loading of 200 TI must be evenly spread between positions 6 to 12 (Max. 50 TI on each position)

Furthermore, it is not allowed to put any other dangerous goods, medicines or foodstuff in an ULD containing radioactive material.

15.2 Dry Ice

Please see the Global Supplementary Operational Document **Dry Ice Consolidation table** for the current maximum allowed Dry Ice limits.

Dry Ice (ICE) and Live Animals (AVI)

There is no weight limit for the loading of Dry Ice (ICE) together with Live Animals (AVI) on the Main-deck.

15.3 Lithium Batteries

Please see the Global Supplementary Operational Document **Lithium Battery Loadability Consolidation Table** for the current UN3480 Section IA/IB (RBI), UN3090 Section IA/IB (RBM), UN3481 Section I (RLI), UN3091 Section I (RLM) load ability limits.

UNCONTROLLED DOCUMENT (11 OCTOBER 2024 16:16:24)

UNCONTROLLED DOCUMENT

16. Messaging and Reporting

16.1 Messaging

Standard messaging rules apply.

16.2 Reporting

Standard reporting rules apply.

UNCONTROLLED DOCUMENT

UNCONTROLLED DOCUMENT

UNCONTROLLED DOCUMENT (11 OCTOBER 2024 16:16:24)

UNCONTROLLED DOCUMENT

17. Load Control Data

17.1 Standard Mass Additions

17.1.1 Additional Crew Members (ACM)

Maximum Number of ACMs: 7

Mass of ACM: 90 kg

17.1.2 Fly Away Kit (FAK) and Ballast

Fly Away Kit (FAK): 260kg Comp.1 not included in the DOM/DOI

Note: As a standard above, mentioned weights have to be used. If operator (or maintenance provider) adds or removes parts resulting in weight adjustments to the FAK or ballast, the overall responsibility shall be to the operator and their OCC to inform the respective station by email notification. However, it is also the responsibility of the ramp supervisor to verify on every flight and report major visible discrepancies to NCG.

Ballast: Not standard, but often required for ferry flights and then to be planned as additional weight as not included in the DOW/DOI.

Above or adjusted weights must be added in Sable and on the Load Plan by Load Control for every flight and verified by the Ramp Team.

17.1.3 Minimum Fuel and Standard Taxi Fuel

Minimum Fuel: Not Applicable

Standard Taxi Fuel: 200 kg

17.2 LMC Restrictions

Computer Loadsheet Maximum LMC: +/- 200 kg

Manual Loadsheet Maximum LMC: +/- 500 kg

UNCONTROLLED DOCUMENT

UNCONTROLLED DOCUMENT

UNCONTROLLED DOCUMENT (11 OCTOBER 2024 16:16:24)

UNCONTROLLED DOCUMENT

18. Maximum Package Dimensions

18.1 Main Cargo Door

FORWARD PALLET UPRIGHT LOADING THROUGH MAIN CARGO DOOR

	WIDTH (IN.)							
	5	20	40	60	80	100	110	125
HEIGHT (IN.)	LENGTH (IN.)							
80	355	262						
76	421	299	217					
72	509	343	241	187				
68	633	399	269	205	166			
64	735	440	289	216	174	146		
60	869	489	310	229	182	152	141	
56	950	546	334	242	190	158	146	132
52	950	630	367	259	201	165	152	132
48	950	630	367	259	201	165	152	132
44	950	630	367	259	201	165	152	132
40	950	630	367	259	201	165	152	132
36	950	630	367	259	201	165	152	132
32	950	630	367	259	201	165	152	132
28	950	630	367	259	201	165	152	132
24	950	630	367	259	201	165	152	132
20	950	630	367	259	201	165	152	132
16	950	630	367	259	201	165	152	132
12	950	630	367	259	201	165	152	132
8	950	630	367	259	201	165	152	132
4	950	630	367	259	201	165	152	132
2	950	630	367	259	201	165	152	132

AFT PALLET UPRIGHT LOADING THROUGH MAIN CARGO DOOR

	WIDTH (IN.)							
	5	20	40	60	80	100	110	125
HEIGHT (IN.)	LENGTH (IN.)							
80	355	262						
76	421	299	217					
72	509	343	241	187				
68	633	399	269	205	166			
64	735	440	289	216	174	146		
60	869	489	310	229	182	152	141	
56	950	546	334	242	190	158	146	132
52	950	630	367	259	201	165	152	132
48	950	630	367	259	201	165	152	132
44	950	630	367	259	201	165	152	132
40	950	630	367	259	201	165	152	132
36	950	630	367	259	201	165	152	132
32	950	630	367	259	201	165	152	132
28	950	630	367	259	201	165	152	132
24	950	630	367	259	201	165	152	132
20	950	630	367	259	201	165	152	132
16	950	630	367	259	201	165	152	132
12	950	630	367	259	201	165	152	132
8	950	630	367	259	201	165	152	132
4	950	630	367	259	201	165	152	132
2	950	630	367	259	201	165	152	132

UNCONTROLLED DOCUMENT (11 OCTOBER 2024 16:16:24)

UNCONTROLLED DOCUMENT

18.2 Forward Lower-deck Hold.

HEAVY PACKAGES LIFT ASSISTED										
HEIGHT IN.	WIDTH IN.									
	5	10	15	20	25	30	35	40	45	48
	LENGTH IN.									
34	124	114	104	94	84	74	64	54	50	45
32	124	114	104	94	84	74	64	54	50	45
30	124	114	104	94	84	74	64	54	50	45
28	124	114	104	94	84	74	64	54	50	45
26	124	114	104	94	84	74	64	54	50	45
24	124	114	104	94	84	74	64	54	50	45
22	124	114	104	94	84	74	64	54	50	45
20	125	114	104	94	84	74	64	54	50	45
18	125	114	104	94	84	74	64	54	50	45
16	126	114	104	94	84	74	64	54	50	45
14	127	114	104	94	84	74	64	54	50	45
12	129	115	104	94	84	74	64	54	50	45
10	131	116	104	94	84	74	64	54	50	45
5	156	120	105	94	84	74	64	54	50	45

LIGHT PACKAGES HAND MANEUVERED[a]										
HEIGHT IN.	WIDTH IN.									
	5	10	15	20	25	30	35	40	45	48
	LENGTH IN.									
34	112	100	90	81	73	67	61	57	54	53
32	131	116	104	94	85	77	71	66	63	62
30	150	131	117	105	95	87	80	74	71	69
28	168	147	124	116	105	95	88	82	77	76
26	188	161	142	126	113	103	94	88	83	81
24	210	177	154	137	122	111	101	94	89	87
22	231	194	167	147	131	118	108	100	94	91
20	254	210	180	157	139	125	114	105	98	96
18	273	228	193	167	147	132	119	110	102	100
16	274	247	206	177	158	139	125	114	106	103
14	275	267	220	188	169	145	130	119	110	107
12	277	273	233	197	171	151	135	123	113	110
10	277	274	250	210	181	159	142	129	118	112
5	280	276	273	242	205	178	158	142	130	116

[a] Package length is limited to a maximum of 205 inches when transverse cargo nets are installed.

UNCONTROLLED DOCUMENT (11 OCTOBER 2024 16:16:24)

UNCONTROLLED DOCUMENT

UNCONTROLLED DOCUMENT

18.3 Aft Lower-deck Hold.

HEAVY PACKAGES LIFT ASSISTED										
HEIGHT IN.	WIDTH IN.									
	5	10	15	20	25	30	35	40	45	48
	LENGTH IN.									
34	70	60								
32	99	89	79	70	60	49				
31	122	112	102	92	82	72	62	52	43	43
30	122	112	102	92	82	72	62	52	43	43
28	122	112	102	92	82	72	62	52	43	43
26	122	112	102	92	82	72	62	52	43	43
24	122	112	102	92	82	72	62	52	43	43
22	122	112	102	92	82	72	62	52	43	43
20	123	112	102	92	82	72	62	52	43	43
18	124	112	102	92	82	72	62	52	43	43
16	125	112	102	92	82	72	62	52	43	43
14	127	112	102	92	82	72	62	52	43	43
12	129	113	102	92	82	72	62	52	43	43
10	138	117	103	92	82	72	62	52	43	43
5	164	130	108	92	82	72	62	52	43	43

LIGHT PACKAGES HAND MANEUVERED[a]										
HEIGHT IN.	WIDTH IN.									
	5	10	15	20	25	30	35	40	45	48
	LENGTH IN.									
34	89	77	66	58	52	[b]	[b]	[b]	[b]	[b]
32	124	108	93	82	72	64	57	52	49	49
30	160	140	123	110	99	89	81	75	70	67
28	176	152	133	118	105	94	85	78	73	70
26	201	171	148	130	116	104	94	86	80	76
24	228	189	162	142	126	113	102	93	87	82
22	247	206	177	152	134	120	108	99	92	88
20	275	225	191	166	147	128	116	105	97	92
18	338	242	206	176	155	135	122	111	102	97
16	339	265	220	188	164	143	128	116	106	100
14	340	293	238	201	174	153	134	121	111	104
12	341	338	253	212	182	160	143	130	119	107
10	343	339	273	226	190	166	148	133	122	110
5	345	340	337	268	221	188	163	144	131	120

UNCONTROLLED DOCUMENT (11 OCTOBER 2024 16:16:24)