UNCONTROLLED DOCUMENT



RGN B752PCF
Cygnus Air B757-200PCF

Revision: 5
Date: 25 September 2024

1 Cygnus Air B757-200PCF Registrations
2 Aircraft Dimensions
3 Aircraft Servicing Points and Specifications
4 Ground Support Equipment
5 Standard Turnaround Times
6 Safety Areas
7 Strong Wind Conditions
8 Aircraft Door Dimensions
9 Compartment Classification and Air-Conditioning
10 Aircraft Cabin Contour Dimensions
11 Maximum Position Weights
12 Aircraft ULD Compatibility
13 Loading and Un-Loading
14 Rigid, Oversized and Special Loads
15 Restricted Commodities Loading
16 Messaging and Reporting
17 Load Control Data
18 Maximum Package Dimensions

UNCONTROLLED DOCUMENT

UNCONTROLLED DOCUMENT

Page	Date	Comment
15	25 September 2024	ULD Types no longer available in the network removed. *(Minor)*
18	25 September 2024	Guidance on the handling of special loads information added. *(Minor)*

UNCONTROLLED DOCUMENT

UNCONTROLLED DOCUMENT

1. Cygnus Air B757-200PCF Registrations

IATA Designator:	**XG**
ICAO Designator:	**RGN**
Valid for:	**ECFTR, ECKLD, ECNFN, ECNHF, ECNYM**

UNCONTROLLED DOCUMENT
UNCONTROLLED DOCUMENT

2. Aircraft Dimensions

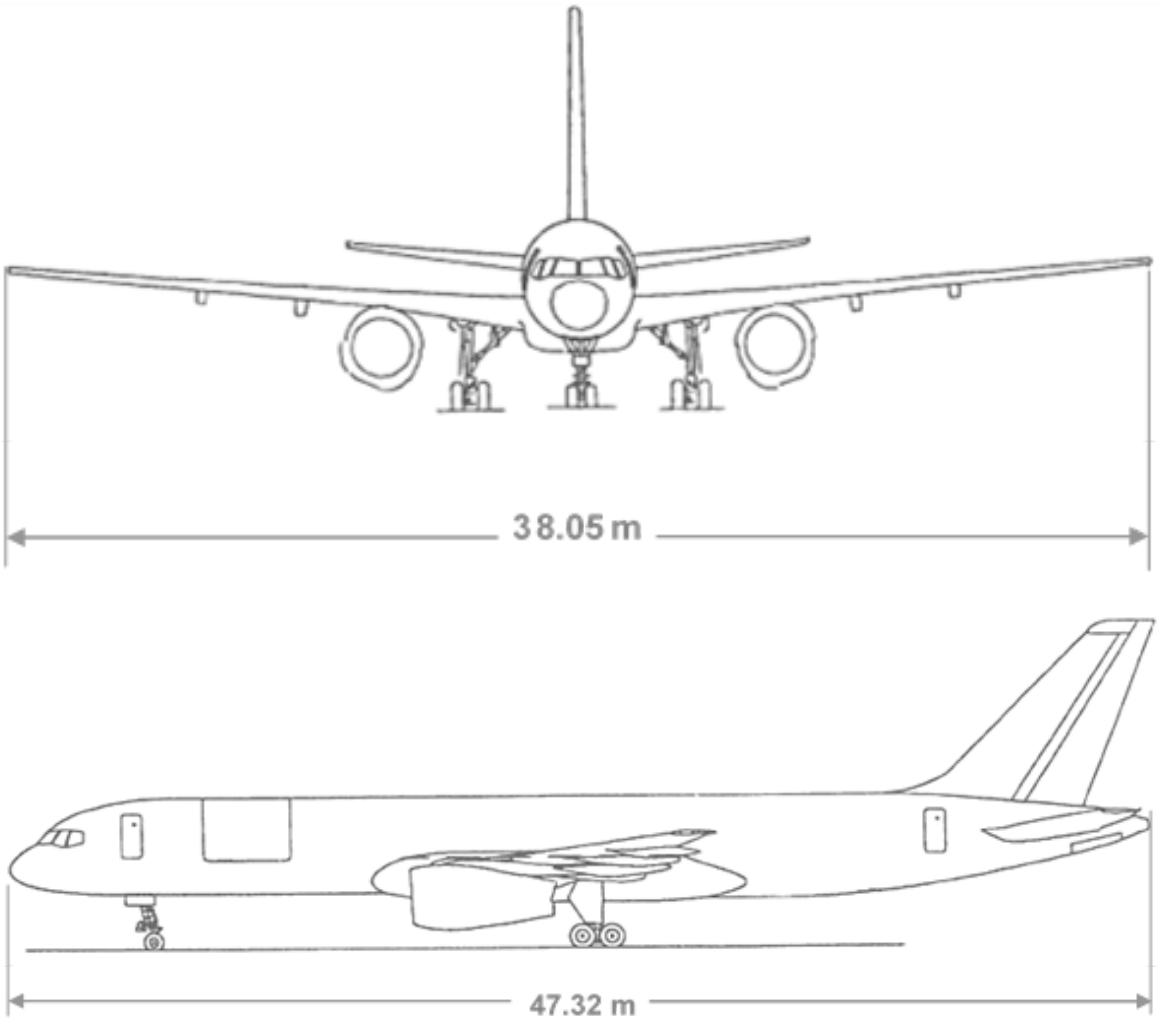

UNCONTROLLED DOCUMENT
UNCONTROLLED DOCUMENT

UNCONTROLLED DOCUMENT (25 SEPTEMBER 2024 17:09:07)

UNCONTROLLED DOCUMENT

UNCONTROLLED DOCUMENT

UNCONTROLLED DOCUMENT

3. Aircraft Servicing Points and Specifications

3.1 Servicing Points

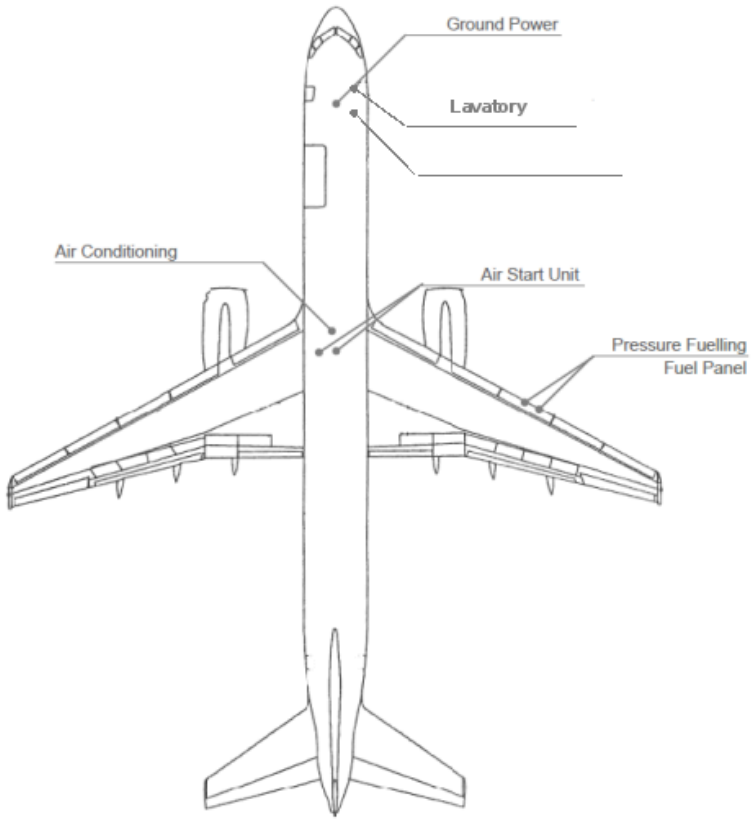

3.2 Servicing Specifications

System	Requirements	Notes
Ground Power Unit	115/200V AC / 90 kVA / 400 Hz	1 GPU connection available
Fuel	Jet A1	Fuel control panel on **RH wing only**
Air Condition Unit	Maximum Flow Rate 225 ppm	1 ACU inlet available
Air Start Unit	Minimum Capacity 226 ppm Max / Min pressure: 60 / 40 psi	2 ASU inlets available. 2 ASUs may be required, depending on flow rate and ambient air temperature.

UNCONTROLLED DOCUMENT (25 SEPTEMBER 2024 17:09:07)

UNCONTROLLED DOCUMENT

4. Ground Support Equipment

4.1 Positioning of GSE

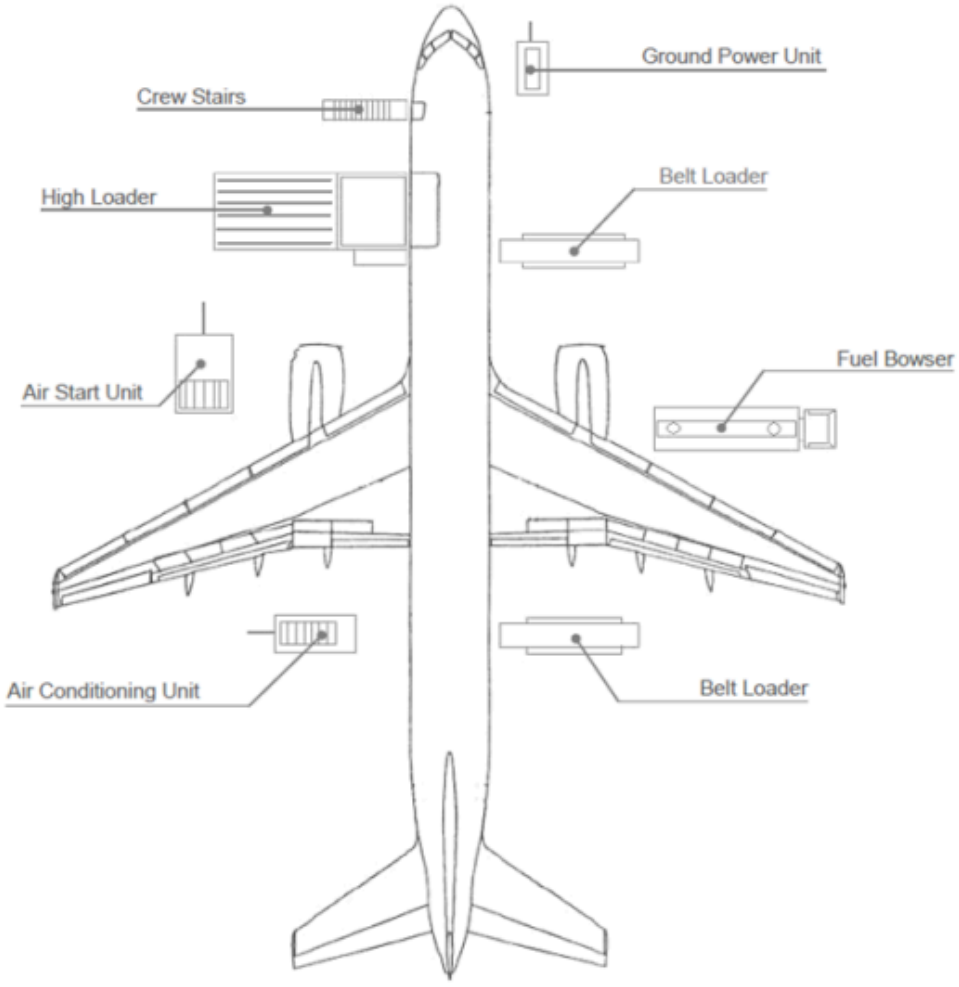

4.2 GSE Requirements

GSE	Type	Quantity
High Loader	Main –deck	1
Ground Power Unit	Diesel. Electric or Fixed	1
Crew Stairs	Platform height 378cm – 401cm	1
Belt Loader	Standard (30 ft. recommended)	2
Tractor	Diesel or Electric	3
Dolly wagons	125”/88” and or 125”/96” capable	Up to 15
Belly Container / Wagon	As required	According to load

UNCONTROLLED DOCUMENT (25 SEPTEMBER 2024 17:09:07)

UNCONTROLLED DOCUMENT

5. Standard Turnaround Times

Turn-around time for a transit stop: 00:45 hour (partial off- and on-load)
Turn-around time for an end stop: 01:00 hour (full off- and on-load)

Note: For airports where the aircraft will power-off stand using engine power, add 3 minutes to the turn-around times listed above.

UNCONTROLLED DOCUMENT

UNCONTROLLED DOCUMENT

UNCONTROLLED DOCUMENT (25 SEPTEMBER 2024 17:09:07)

UNCONTROLLED DOCUMENT

6. Safety Areas

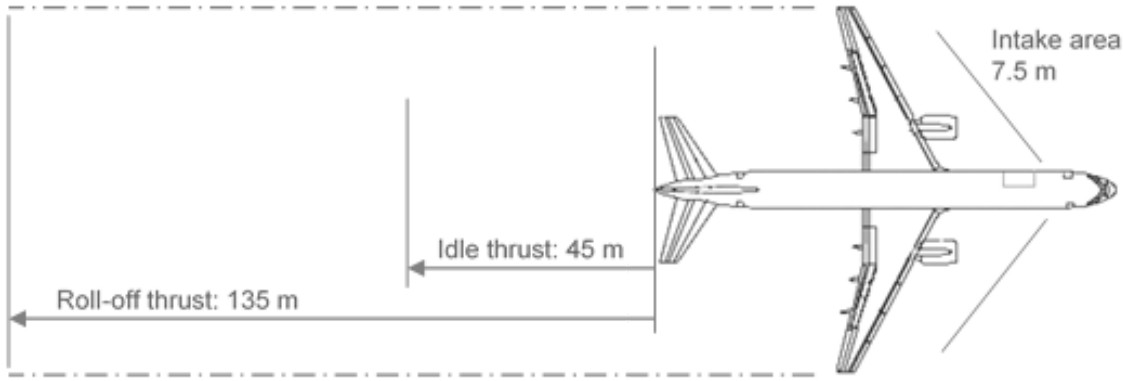

UNCONTROLLED DOCUMENT

UNCONTROLLED DOCUMENT

UNCONTROLLED DOCUMENT (25 SEPTEMBER 2024 17:09:07)

7. Strong Wind Conditions

If the wind conditions on the ramp reach the following speeds, the corresponding actions shall be taken.

Wind Speed	Action
Up to 25 Knots	Main cargo door shall only be operated in full-open position at a max. of 25 knots.
More than 25 Knots	Main cargo door must be operated in *Canopy position.
Up to 45 knots	Normal Operations: All doors can be opened and left open
More than 45 knots	Do not open additional doors
More than 45 knots	All open doors shall be closed immediately

Notes: * Since there is no indication for Canopy position it is defined as follows:

Door position where an imaginary horizontal line between the door hinge lower edge is formed parallel to the ground +/-20 degrees.

UNCONTROLLED DOCUMENT
UNCONTROLLED DOCUMENT

UNCONTROLLED DOCUMENT (25 SEPTEMBER 2024 17:09:07)

8. Aircraft Door Dimensions

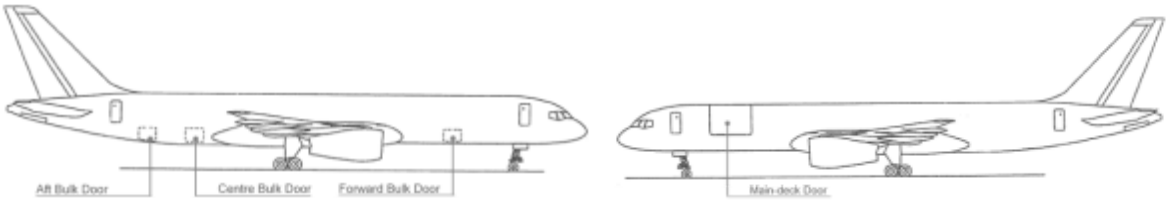

Door width, height, and sill height are defined as follows.

(This drawing is for illustration purposes only and may not be an exact representation of this aircraft type)

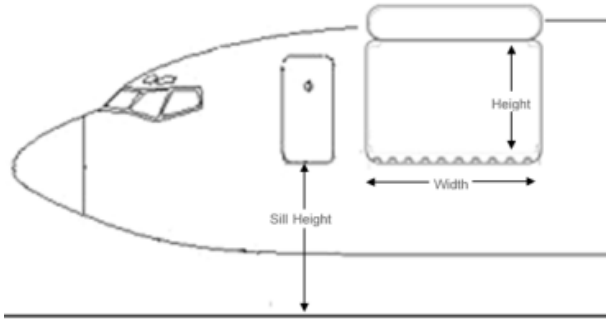

All dimensions are in centimetres (cm).

Door	Door Width	Door Height	Min. Door Sill Height	Max. Door Sill Height
Crew Door	-	-	379	401
Main Deck	345	216	381	401
Forward Bulk	140	107	246	267
Aft Bulk	140	114	236	251

UNCONTROLLED DOCUMENT
UNCONTROLLED DOCUMENT

UNCONTROLLED DOCUMENT (25 SEPTEMBER 2024 17:09:07)

9. Compartment Classification and Air-Conditioning

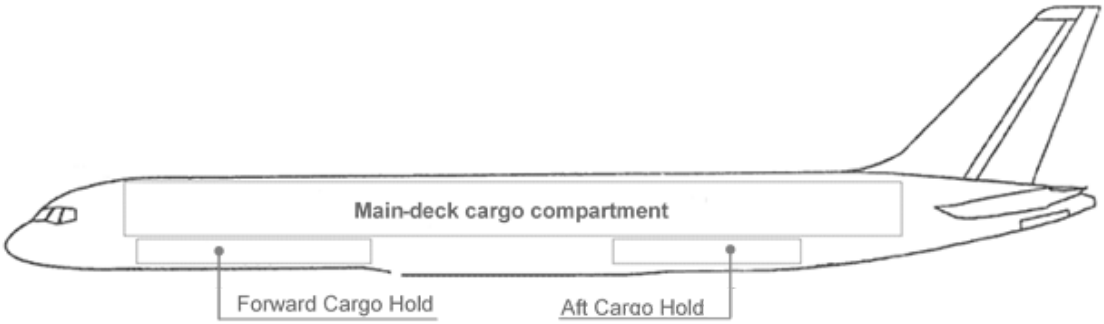

9.1 Compartment Classification

Compartment		Features
Main-deck	Position A loaded with 125"/88"-96" ULD **with** 50 cm (18") aisle.*	- Classification **E**
		- Pressurisation
		- Smoke Detection
		- **Accessible** during flight
	Position A loaded with 125"/88-96" and ULD **without 50 cm (18")** access aisle.*	- Classification **E**
		- Pressurisation
		- Smoke Detection
		- **In-accessible** during flight
Lower Deck Compartment All Holds		- Classification **C**
		- Pressurisation
		- Smoke Detection
		- **In-accessible** during flight
		-Fire Suppression

9.2 Air-Conditioning

	Main Deck	FWD Lower Hold*	AFT Lower Hold*
Temperature	18°C to 30°C Heated and adjustable	10°C to 21°C Heated non-adjustable	10°C to 21°c Heated non-adjustable
Heating	Yes	Yes	
Heat Adjust	Yes	No	
Cooling	Yes	No	
Ventilation	Yes	From Main Deck Leakage Only	

UNCONTROLLED DOCUMENT
UNCONTROLLED DOCUMENT

UNCONTROLLED DOCUMENT (25 SEPTEMBER 2024 17:09:07)

UNCONTROLLED DOCUMENT

10. Aircraft Cabin Contour Dimensions

The aircraft is divided into three contour zones: CI, CII and CII. Note that all heights given in the below Contour diagrams are **from the top of rollers**.

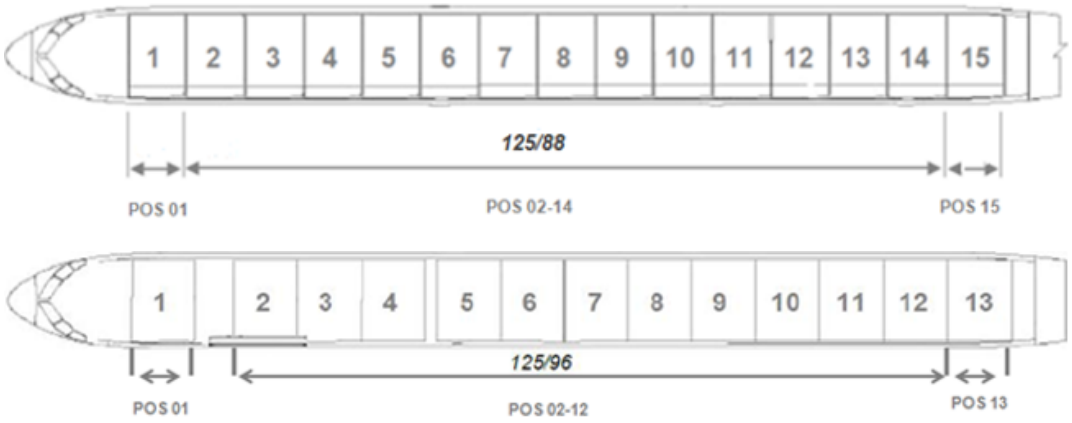

10.1 Contour CI

(Pos 1 88" and 96")

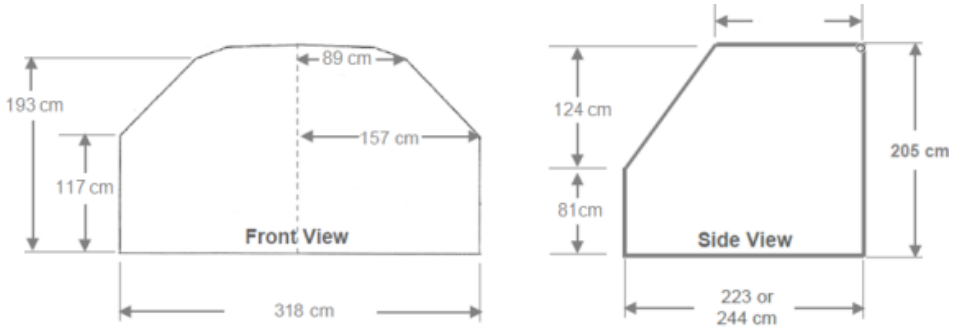

Side View

Note: The sloped contour on the side view must face **forward**.

UNCONTROLLED DOCUMENT (25 SEPTEMBER 2024 17:09:07)

UNCONTROLLED DOCUMENT

10.2 Contour CII

(Pos 2 - 14 88" and Pos 2 – 12 96")

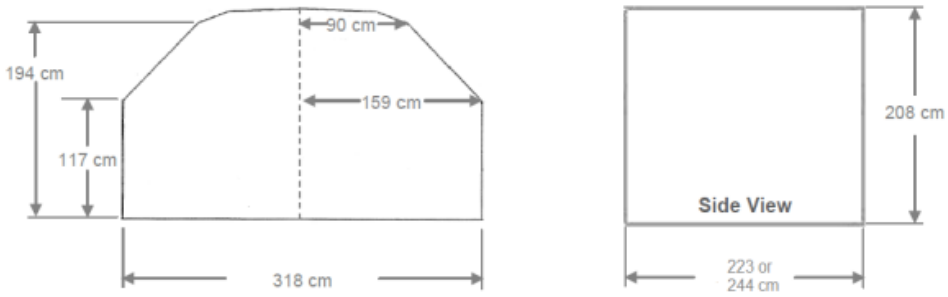

10.3 Contour CIII

(Pos 15 88" and Pos 13 96")

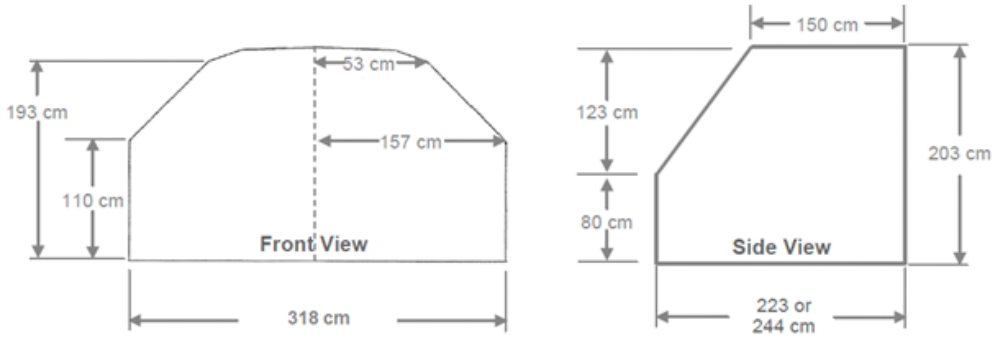

Note: The sloped contour on the side view must face **aft.**

UNCONTROLLED DOCUMENT (25 SEPTEMBER 2024 17:09:07)

11. Maximum Position Weights

11.1 Maximum Main-deck ULD Weights in Kilograms

	ULD Position														
ULD Size	1	2	3	4	5	6	7	8	9	10	11	12	13	14	15
125"/ 88"	2716	2948						4264		2948					
125"/96"	2856	3216				4652		3216							

11.2 Maximum Lower-deck Compartment Weights in Kilograms

	Forward hold		Aft hold	
Compartment	1	2	3	4
Max. Weight	2469	4672	3773	5606
	4672		7393	
Compartment Volume (m3)				
Compartment	1	2	3	4
ECKLD, ECFTR	4.94	13.96	14.24	13.73*
ECNFN, ECNHF	5.21	14.58	14.24	16.2

*Registration ECFTR compartment 4 has a Volume of 16.76 m3.

Note: The compartment volumetric capacity in the lower holds of the B757PCFs are approximately equivalent to 3 LAY ULDs and 1 AKE ULD, all 80% volumetrically filled.

UNCONTROLLED DOCUMENT
UNCONTROLLED DOCUMENT

UNCONTROLLED DOCUMENT (25 SEPTEMBER 2024 17:09:07)

12. Aircraft ULD Compatibility

12.1 Aircraft Configurations

The loading combinations shown here are examples only. More combinations are possible. Full information covering possible loading combinations, and how they interact, can be found in the Sable system.

Valid for: **ECFTR, ECKLD, ECNFN, ECNHF, ECNYM**



Configuration 1: 15 Lateral 125”/88”

Valid for: **ECNFN, ECNHF, ECNYM**

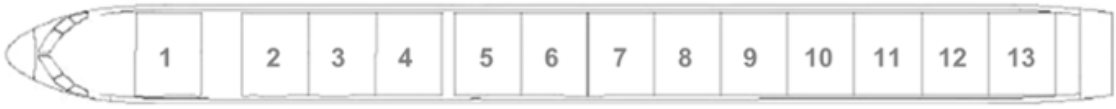

Configuration 2: 13 Lateral 125”/96”

Note: For the 125” x 96” configuration, an authorization is required by Cygnus Air management, since maintenance work is required.

UNCONTROLLED DOCUMENT
UNCONTROLLED DOCUMENT

UNCONTROLLED DOCUMENT (25 SEPTEMBER 2024 17:09:07)

UNCONTROLLED DOCUMENT

12.2 ULD Compatibility Table

The following ULD type loading restrictions apply. The ULD type can be loaded on positions marked with a 'Y'. The ULD type cannot be loaded on positions marked with a 'N'.

		ULD Type				
	Pos	AAA	AAC/ LAY	AAJ/ LAK	PAG/ PAJ	PMC
Configuration 1	1	N	Y1	Y	Y	N
	2	Y	Y	Y	Y	N
	3	Y	Y	Y	Y	N
	4	Y	Y	Y	Y	N
	5	Y	Y	Y	Y	N
	6	Y	Y	Y	Y	N
	7	Y	Y	Y	Y	N
	8	Y	Y	Y	Y	N
	9	Y	Y	Y	Y	N
	10	Y	Y	Y	Y	N
	11	Y	Y	Y	Y	N
	12	Y	Y	Y	Y	N
	13	Y	Y	Y	Y	N
	14	Y	Y	Y	Y	N
	15	N	Y2	Y	Y	N
Configuration 2	1	N	N	N	N	Y
	2	N	N	N	N	Y
	3	N	N	N	N	Y
	4	N	N	N	N	Y
	5	N	N	N	N	Y
	6	N	N	N	N	Y
	7	N	N	N	N	Y
	8	N	N	N	N	Y
	9	N	N	N	N	Y
	10	N	N	N	N	Y
	11	N	N	N	N	Y
	12	N	N	N	N	Y
	13	N	N	N	N	Y

Y1: AAC serial range 9021 and above allowed.

Y2: All LAY and AAC serial ranges 9346-9410, 9731-9995 allowed.

Notes: Containers with sloped (contoured) fronts/backs must be loaded as follows.

- Configuration 1: 1 – 14 Sloped contour side facing forward and Position 15 sloped contour side facing Aft.
- Configuration 2: 1 – 12 Sloped contour side facing forward and Position 13 sloped contour side facing Aft.

No Pallet stacks allowed on the first and/or last positions main deck.
Configuration 1, Care must be exercised loading AAA, AAC/LAY ULDs, to prevent out-of-gauge ULDs impacting the roof or sidewall lining.

UNCONTROLLED DOCUMENT (25 SEPTEMBER 2024 17:09:08)

13. Loading and Un-Loading

13.1 Un-Loading Sequence

Step 1: Un-load the aft lower deck.

Step 2: Un-load the ULDs on the main deck in the following numbered sequence, and respect standard step un-loading method:

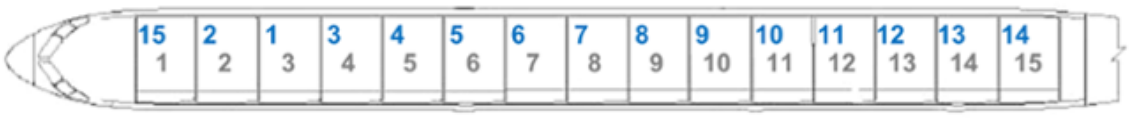

Step 3: Un-load the forward lower deck.

13.2 Loading Sequence

Step 1: Load the forward lower deck.

Step 2: Load the ULDs on the main deck in the following numbered sequence, and respect standard step un-loading method:



Step 3: Load the aft lower deck.

13.3 Loading Notes

13.3.1 Counter-ballast

To provide counterbalance during loading and offloading, **a minimum of 1000kg is required in Position 1 for loads in excess of 10.000 kg**. Below that figure, a minimum of 10% of the load must be Position A to provide counterbalance.

If carrying light CAO ULDs, **it is allowed to combine Position 1 and belly 21** to comply with the minimum counterbalance requirement.

Note: This is a loading note only and only applies during the loading and offloading process.

13.3.2 Simultaneous Loading and Un-loading of Lower-deck Holds

Due to the inherent stability of this aircraft, simultaneous loading and/or un-loading of all lower-deck holds, using up to 3 belt-loaders, is allowed. If this procedure is being used, it must be ensured that Position 1, or Position 1 and Belly 21, is/are always loaded with no less than 1.000 kg.

UNCONTROLLED DOCUMENT
UNCONTROLLED DOCUMENT

UNCONTROLLED DOCUMENT (25 SEPTEMBER 2024 17:09:08)

13.3.3 Sliding Carpet

After un-loading, the Sliding Carpet should be fully retracted unless the hold will be loaded for an outbound flight. Prior to departure, the Sliding Carpet must be fully retracted. This procedure is to ensure the hold will be serviceable even if the Sliding Carpet should malfunction.

Note: It is prohibited for ground staff to detach the bulkhead assembly.

13.3.4 Lower Lobe Cargo Door Switch Malfunction

The door is supposed to stop in any position when the switch is released. However, it has been known to fail, and continue to close after the control switch is released.

The switch is located in the external control panel aft of each cargo door

Ramp personnel must be aware of this potential situation. They shall:

- Position themselves clear of the door path when operating the door
- Ensure that the door stops moving after releasing the control switch, before moving into the door path area.

UNCONTROLLED DOCUMENT
UNCONTROLLED DOCUMENT

UNCONTROLLED DOCUMENT (25 SEPTEMBER 2024 17:09:08)

14. Rigid, Oversized and Special Loads

For guidance on the handling of special loads, please refer to the Special Loads Regional Contact Instructions outlined in Chapter 6 **6.12.22.3 - Determining Loadability of Special Loads**. Where direct operator approval is required, the Regional Airside Team will liaise with Global Airside as needed.

14.1 Floating / Heavy Pallets

Floating Pallets are not allowed on these aircraft.

14.2 Crushable Cargo Requirements

Where Rigid Cargo has been identified, the first loaded position on the aircraft shall be loaded with Crushable Cargo ULDs suitable for protecting the barrier wall against unrestrained Rigid Cargo.

14.3 Piercing Cargo

Piercing cargo may not be loaded on the first and last loaded position on the aircraft.

14.4 Aircraft Engines

The following Aircraft engines are loadable on the B757-200PCF.

Engine Type	Loaded on	Allowed Loading positions	Loading direction
BR710 BR715 CFM56-2	96” Pallet	Flying Load Master may be required before aircraft engine will be accepted for transport	Not important
CFM56-3 CFM56-5 CFM-56-7 V2500			
JT3 JT8			

UNCONTROLLED DOCUMENT
UNCONTROLLED DOCUMENT

UNCONTROLLED DOCUMENT (25 SEPTEMBER 2024 17:09:08)

UNCONTROLLED DOCUMENT

14.5 Live Animals

14.5.1 Horses

No restrictions are in place, contact your Special Loads Regional contact for further information.

14.5.2 Other Live Animals

The following table provides a list of commonly transported animals. If there is a requirement to transport animals not listed below, contact your Special Loads Regional contact.

<table>
<tr><th></th><th>Main-Deck</th><th>Forward hold</th><th>Aft hold</th></tr>
<tr><td>Day-old chickens</td><td>Yes (max 2 pallets)</td><td rowspan="12">Yes</td><td rowspan="8">No</td></tr>
<tr><td>Monkeys</td><td rowspan="11">Yes</td></tr>
<tr><td>Pigs</td></tr>
<tr><td>Cattle</td></tr>
<tr><td>Sheep or Goats</td></tr>
<tr><td>Dogs or Cats</td></tr>
<tr><td>Small mammals or birds</td></tr>
<tr><td>Topical Fish</td></tr>
<tr><td>Reptiles or Amphibians</td></tr>
<tr><td>Eels</td><td>Yes</td></tr>
<tr><td>Crustaceans or Molluscs</td><td>Yes</td></tr>
<tr><td>Bees</td><td>No</td></tr>
<tr><td>Hatching eggs</td><td>Yes</td></tr>
</table>

UNCONTROLLED DOCUMENT (25 SEPTEMBER 2024 17:09:08)

15. Restricted Commodities Loading

15.1 Radioactive (RRY), Magnetised (MAG) and Cargo Aircraft Only (CAO)

The following Dangerous Good type loading restrictions apply. The Dangerous Good type can be loaded on positions marked with a 'Y'. The Dangerous Good type cannot be loaded on positions marked with a 'N'.

	Position																
DG Type	1	2	3	4	5	6	7	8	9	10	11	12	13	14	15	FWD LD	AFT LD
MAG	N	N	N	N	N	N	N	N	N	Y	Y	Y	Y	Y	Y	N	Y
CAO	Y	Y	Y	Y	Y	Y	Y	Y	Y	Y	Y	Y	Y	Y	Y	N	N
RRY (max. 50 TI combined)	N	N	N	Y	Y	Y	Y	Y	Y	Y	Y	Y	Y	Y	Y	N	N
RRY (max. 200 TI combined)	N	N	N	N	Y	Y	Y	Y	Y	Y	Y	Y	Y	Y	Y	N	N

Note: Cargo Aircraft Only (CAO) can be loaded on any Main Deck position 1 to 15 provided they are loaded accessible. Accessible means that:

- The CAO is loaded on a pallet
- All positions forward of the CAO are loaded with 125"/88"-96" pallets with aisle

15.2 Dry Ice

Please see the Global Supplementary Operational Document **Dry Ice Consolidation table** for the current maximum allowed Dry Ice limits.

Dry Ice (ICE) and Live Animals (AVI)

There is no weight limit for the loading of Dry Ice (ICE) together with Live Animals (AVI) on the Main-deck.

15.3 Lithium Batteries

Please see the Global Supplementary Operational Document **Lithium Battery Loadability Consolidation Table** for the current UN3480 Section IA/IB (RBI), UN3090 Section IA/IB (RBM), UN3481 Section I (RLI), UN3091 Section I (RLM) load ability limits.

UNCONTROLLED DOCUMENT
UNCONTROLLED DOCUMENT

UNCONTROLLED DOCUMENT (25 SEPTEMBER 2024 17:09:08)

16. Messaging and Reporting

16.1 Messaging

Standard messaging rules apply.

16.2 Reporting

Standard reporting rules apply.

UNCONTROLLED DOCUMENT
UNCONTROLLED DOCUMENT

UNCONTROLLED DOCUMENT

17. Load Control Data

17.1 Standard Mass Additions

17.1.1 Additional Crew Members (ACM)

Maximum Number of ACMs:	ECKLD = 2. All other registrations = 4.
Mass of ACM:	85 kg

17.1.2 Fly Away Kit (FAK) and Ballast

An FAK is not carried as standard on this aircraft.

Ballast is not carried as standard on this aircraft.

17.2 Minimum Fuel and Standard Taxi Fuel

Minimum Fuel:	2000 kg
Standard Taxi Fuel:	500 kg

17.3 LMC Restrictions

Maximum LMC:	Payload + Extra Crew + Fuel < 1,000kg.

17.4 Minimum Flight Weight (MFW)

The Minimum Flight Weight is the minimum weight which the aircraft must maintain for the entire duration of a flight.

For empty or lightly loaded flights, physical ballast is required to reach the MFW.

The payload / ballast required to be loaded on an aircraft in order to maintain MFW can be calculated as the difference between the MFW and the Dry Operating Weight (DOW). The MFW and DOW can be found in **Aircraft Index and Classification**.

UNCONTROLLED DOCUMENT

UNCONTROLLED DOCUMENT

UNCONTROLLED DOCUMENT (25 SEPTEMBER 2024 17:09:08)

UNCONTROLLED DOCUMENT

18. Maximum Package Dimensions

18.1 Main Deck Cargo Door

Not currently available at this time.

18.2 Forward Hold

HEAVY PACKAGES LIFT ASSISTED											
HEIGHT IN.	WIDTH IN.										
	5	10	15	20	25	30	35	40	45	50	55
	LENGTH IN.										
40	139	129	119	109	99	89	79	69	61	55	50
35	139	129	119	109	99	89	79	69	61	55	50
30	140	129	119	109	99	89	79	69	61	55	50
25	141	129	119	109	99	89	79	69	61	55	50
20	144	130	119	109	99	89	79	69	61	55	50
15	148	132	119	109	99	89	79	69	61	55	50
10	157	136	120	109	99	89	79	69	61	55	50
5	177	146	125	110	99	89	79	69	61	55	50

LIGHT PACKAGES HAND MANEUVERED											
HEIGHT IN.	WIDTH IN.										
	5	10	15	20	25	30	35	40	45	50	55
	LENGTH IN.										
40	151	139	129	119	109	99	89	79	70	63	57
35	192	172	156	144	134	123	113	103	92	83	76
30	239	207	184	166	152	140	130	119	109	98	89
25	290	243	210	186	168	153	141	131	120	108	98
20	290	243	210	186	168	153	141	131	120	108	98
15	290	243	210	186	168	153	141	131	120	108	98
10	290	243	210	186	168	153	141	131	120	108	98
5	290	243	210	186	168	153	141	131	120	108	98

UNCONTROLLED DOCUMENT

UNCONTROLLED DOCUMENT (25 SEPTEMBER 2024 17:09:08)

UNCONTROLLED DOCUMENT

18.3 Aft Hold

HEAVY PACKAGES LIFT ASSISTED											
HEIGHT IN.	WIDTH IN.										
	5	10	15	20	25	30	35	40	45	50	55
	LENGTH IN.										
42	135	132	122	112	102	92	82	72	64	57	51
40	135	132	122	112	102	92	82	72	64	58	51
35	135	132	122	112	102	92	82	72	64	58	51
30	135	132	122	112	102	92	82	72	64	58	51
25	135	133	122	112	102	92	82	72	64	58	51
20	135	133	122	112	102	92	82	72	64	58	51
15	135	133	123	112	102	92	82	72	64	58	51
10	135	133	126	112	102	92	82	72	64	58	51
5	135	133	132	115	102	92	82	72	64	58	51

LIGHT PACKAGES HAND MANEUVERED											
HEIGHT IN.	WIDTH IN.										
	5	10	15	20	25	30	35	40	45	50	55
	LENGTH IN.										
42	136	134	133	124	114	104	94	84	75	67	60
40	137	136	134	132	124	113	103	93	83	75	67
35	140	138	136	134	132	129	121	111	100	90	82
30	142	140	138	136	133	131	129	124	113	102	93
25	144	142	140	137	135	132	130	127	122	110	100
20	144	142	140	137	135	132	130	127	122	110	100
15	144	142	140	137	135	132	130	127	122	110	100
10	144	142	140	137	135	132	130	127	122	110	100
5	144	142	140	137	135	132	130	127	122	110	100

UNCONTROLLED DOCUMENT

UNCONTROLLED DOCUMENT

UNCONTROLLED DOCUMENT (25 SEPTEMBER 2024 17:09:08)