UNCONTROLLED DOCUMENT

UNCONTROLLED DOCUMENT

DHA B752PCF

DHL Air Austria GmbH B757-200PCF

Revision: 3
Date: 28 November 2024

1 DHL Air Austria GmbH B757-200PCF Registrations

2 Aircraft Dimensions

3 Aircraft dimensions with winglets

4 Aircraft Servicing Points and Specifications

5 Ground Support Equipment

6 Standard Turnaround Times

7 Safety Areas

8 Strong Wind Conditions

9 Aircraft Door Dimensions

10 Compartment Classification and Air-Conditioning

11 Aircraft Cabin Contour Dimensions

12 Maximum Position Weights

13 Aircraft ULD Compatibility

14 Loading and Un-Loading

15 Rigid, Oversized and Special Loads

16 Restricted Commodities Loading

17 Messaging and Reporting

18 Load Control Data

19 Maximum Package Dimensions

UNCONTROLLED DOCUMENT (28 NOVEMBER 2024 21:00:45)

UNCONTROLLED DOCUMENT

Page	Date	Comment
16	28 November 2024	AAY removed from notes. *(Minor)*

UNCONTROLLED DOCUMENT

UNCONTROLLED DOCUMENT

UNCONTROLLED DOCUMENT

1. DHL Air Austria GmbH B757-200PCF Registrations

IATA Designator:	**Q7**
ICAO Designator:	**DHA**
Valid for:	**OELNB, OELNC, OELND, OELNE, OELNF, OELNH, OELNI, OELNJ, OELNK, OELNL, OELNO, OELNQ, OELNR, OELNU, OELNW, OELNX, OELNZ**

UNCONTROLLED DOCUMENT

UNCONTROLLED DOCUMENT

UNCONTROLLED DOCUMENT (28 NOVEMBER 2024 21:00:45)

2. Aircraft Dimensions

Valid for: **OELNB, OELNC, OELND, OELNE, OELNF, OELNH, OELNI**

All dimensions in meters.

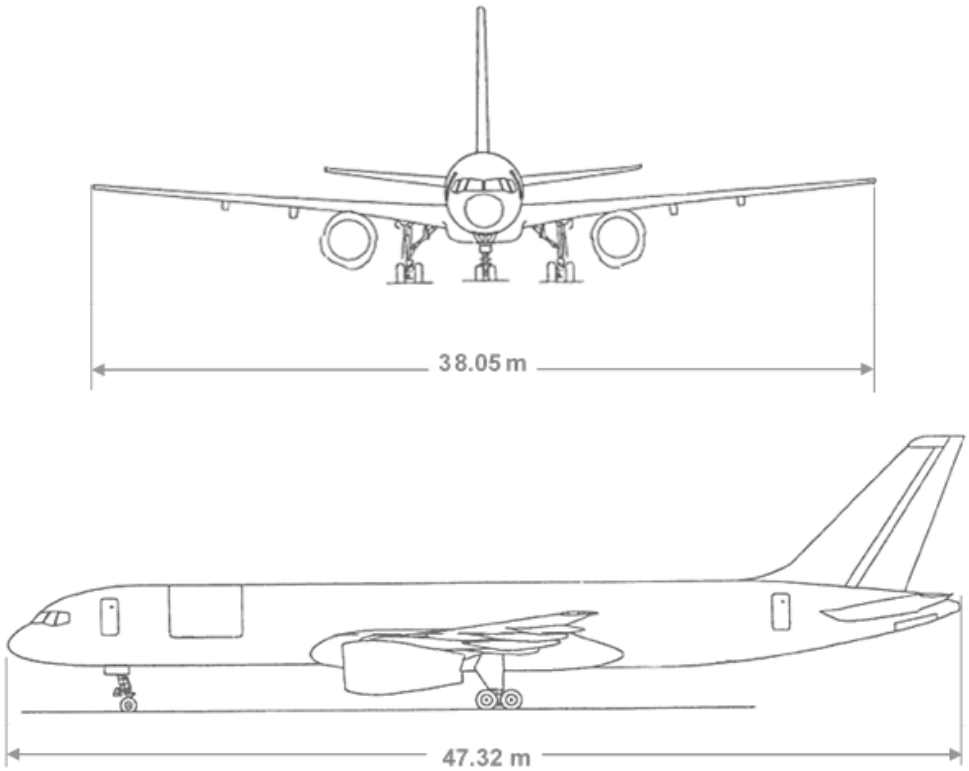

UNCONTROLLED DOCUMENT
UNCONTROLLED DOCUMENT

3. Aircraft dimensions with winglets

Valid for: **OELNJ, OELNK, OELNL, OELNO, OELNQ, OELNR, OELNU, OELNW, OELNX, OELNZ**



UNCONTROLLED DOCUMENT
UNCONTROLLED DOCUMENT

UNCONTROLLED DOCUMENT

4. Aircraft Servicing Points and Specifications

4.1 Servicing Points

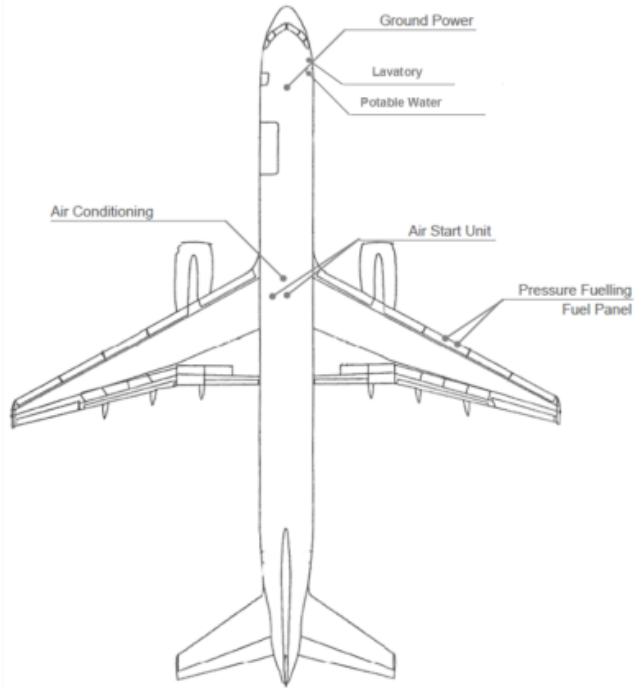

4.2 Servicing Specifications

System	Requirements	Notes
Ground Power	115/200V AC / 90 kVA / 400 Hz	1 GPU Connection available
Fuel	Jet A1	Fuel control panel on **RH wing only**
Air Condition Unit	Maximum Flow Rate 150 ppm	1 ACU inlet available
Air Start Unit (Pneumatic)	Minimum capacity 226 ppm Max. / Min. pressure 60 / 40 psi	3 ASU inlets installed (2 left / 1 right) 2 ASUs may be required, depending on flow rate and ambient air temperature. 2 hoses always needed.
Potable Water	Approx. 8 litres	Water tank is not in use on this aircraft. **Do not attempt to refill water tank.**
Lavatory	-	Toilet service will, during normal operations, be performed at LEJ and EMA only. Assistance from local stations may be requested in case urgent servicing is required. Note: For lavatory service under severe heat conditions, please refer to **3. Aircraft General Safety and Servicing Operations**.

UNCONTROLLED DOCUMENT (28 NOVEMBER 2024 21:00:45)

UNCONTROLLED DOCUMENT

5. Ground Support Equipment

5.1 Positioning of GSE

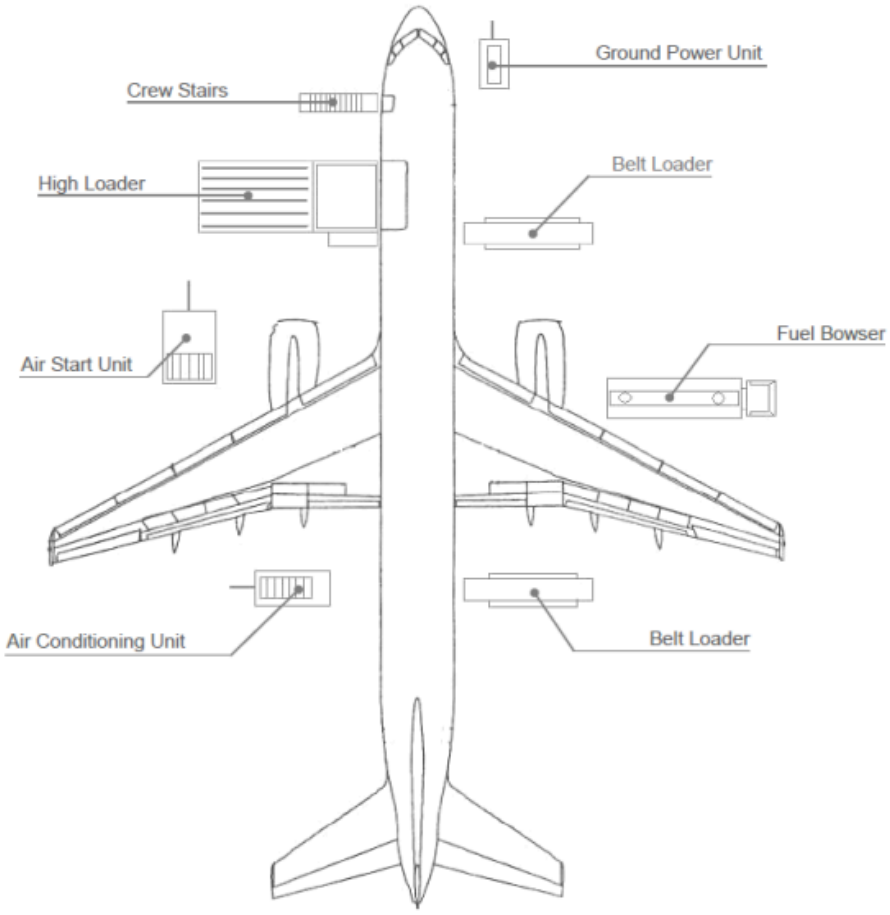

5.2 GSE Requirements

GSE	Type	Quantity
High Loader	Main –deck	1
Ground Power Unit	Diesel. Electric or Fixed	1
Crew Stairs	Platform height 382cm – 392cm	1
Belt Loader	Standard (30 ft. recommended	2
Tractor	Diesel or Electric	3
Dolly wagons	125”/88” and or 125”/96” capable	Up to 15
Belly Container / Wagon	As required	According to load

UNCONTROLLED DOCUMENT (28 NOVEMBER 2024 21:00:45)

UNCONTROLLED DOCUMENT

6. Standard Turnaround Times

Turn-around time for a transit stop: 00:45 hour (partial off- and on-load)
Turn-around time for an end stop: 01:00 hour (full off- and on-load)

Note: For airports where the aircraft will power-off stand using engine power, add 3 minutes to the turn-around times listed above.

UNCONTROLLED DOCUMENT

UNCONTROLLED DOCUMENT

UNCONTROLLED DOCUMENT (28 NOVEMBER 2024 21:00:45)

UNCONTROLLED DOCUMENT

7. Safety Areas

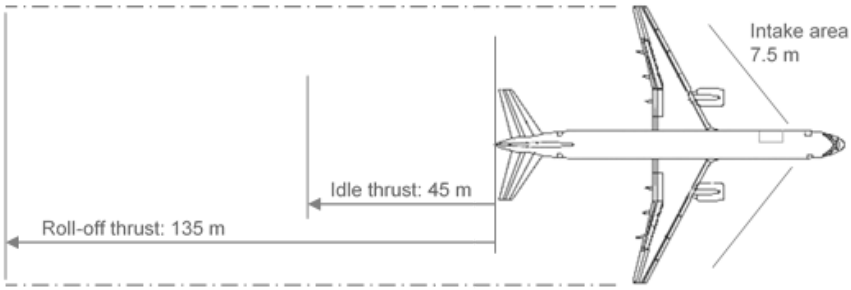

UNCONTROLLED DOCUMENT

UNCONTROLLED DOCUMENT

UNCONTROLLED DOCUMENT (28 NOVEMBER 2024 21:00:45)

UNCONTROLLED DOCUMENT

8. Strong Wind Conditions

If the wind conditions on the ramp reach the following speeds, the corresponding actions shall be taken.

Wind Speed	Action
Up to 25 knots	Main cargo door shall only be operated in full-open position
More than 25 knots	Main cargo door must be operated in Canopy position.
More than 45 knots	Do not operate the Main deck cargo door.

Notes:

- **Since there is no indication for Canopy position it is defined as follows:** Door position where an imaginary horizontal line between the door hinge lower edge is formed parallel to the ground +/-20 degrees.
- The main cargo door shall be in closed and locked position for towing, taxiing, and jacking.

UNCONTROLLED DOCUMENT

UNCONTROLLED DOCUMENT

UNCONTROLLED DOCUMENT (28 NOVEMBER 2024 21:00:45)

9. Aircraft Door Dimensions

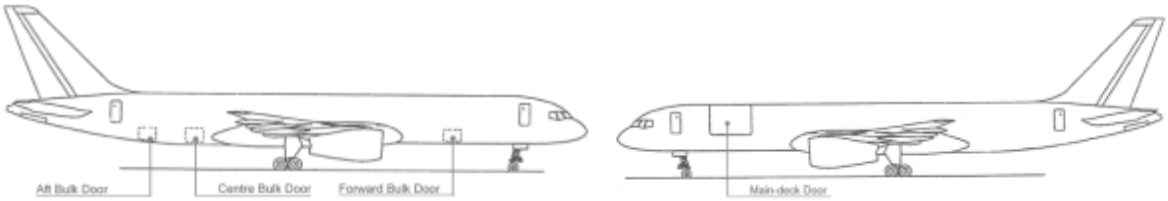

Door width, height, and sill height are defined as follows.

(This drawing is for illustration purposes only and may not be an exact representation of this aircraft type)

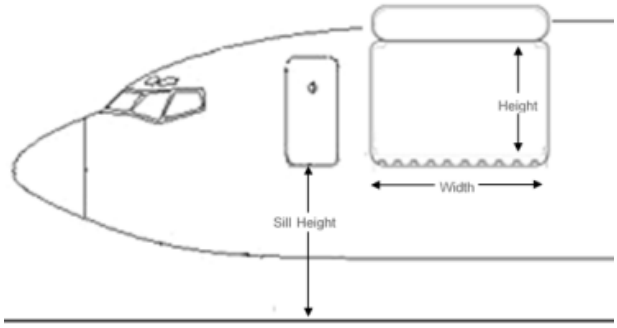

All dimensions are in centimetres (cm).

Door	Door Width	Door Height	Min. Door Sill Height	Max. Door Sill Height
Crew Door	-	-	402	412
Main Deck	345	216	378	404
Forward Bulk	140	107	246	267
Aft Bulk	140	112	231	251

UNCONTROLLED DOCUMENT
UNCONTROLLED DOCUMENT

UNCONTROLLED DOCUMENT (28 NOVEMBER 2024 21:00:45)

10. Compartment Classification and Air-Conditioning

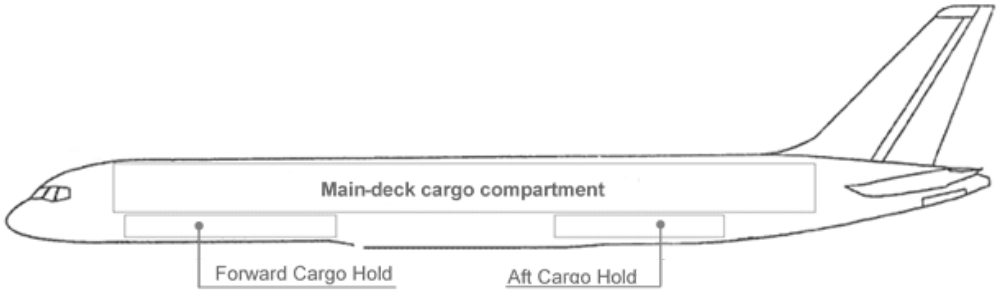

10.1 Compartment Classification

Compartment		Features
Main-deck	Position 1 loaded with 125"/88"-96" ULD **with** 50 cm (18") aisle.	- Classification **E**
		- Pressurisation
		- Smoke Detection
		- **Accessible** during flight
	Position 1 loaded with 125"/88-96" and ULD **without 50 cm (18")** access aisle.	- Classification **E**
		- Pressurisation
		- Smoke Detection
		- **In-accessible** during flight
Lower Deck Compartment All Holds		- Classification **C**
		- Pressurisation
		- Smoke Detection
		- **In-accessible** during flight
		-Fire Suppression

10.2 Air-Conditioning

	Main Deck	FWD Lower Hold*	AFT Lower Hold*
Temperature	18°C to 29°C	No Direct Control 10°C to 21°C	No Direct Control 10°C to 21°c
Heating	Yes	Yes	
Heat Adjust	Yes	No	
Cooling	Yes	No	
Ventilation	Yes	From Main Deck Leakage Only	

UNCONTROLLED DOCUMENT
UNCONTROLLED DOCUMENT

UNCONTROLLED DOCUMENT (28 NOVEMBER 2024 21:00:45)

UNCONTROLLED DOCUMENT

11. Aircraft Cabin Contour Dimensions

11.1 Aircraft layouts

The aircraft is divided into three contour zones: CI, CII and CIII. Note that all heights given in the below Contour diagrams are **from the top of rollers**.

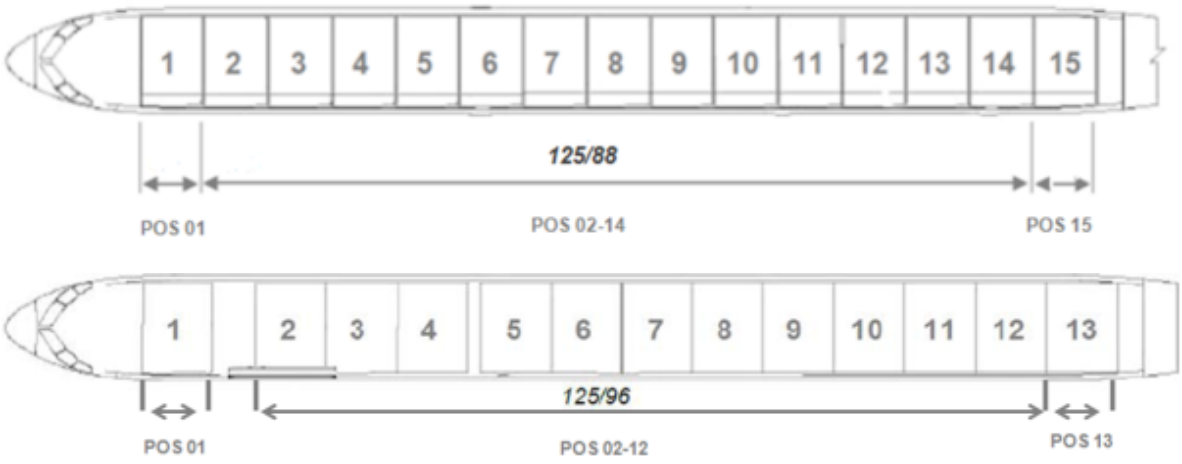

11.2 Contour CI (Position 1)

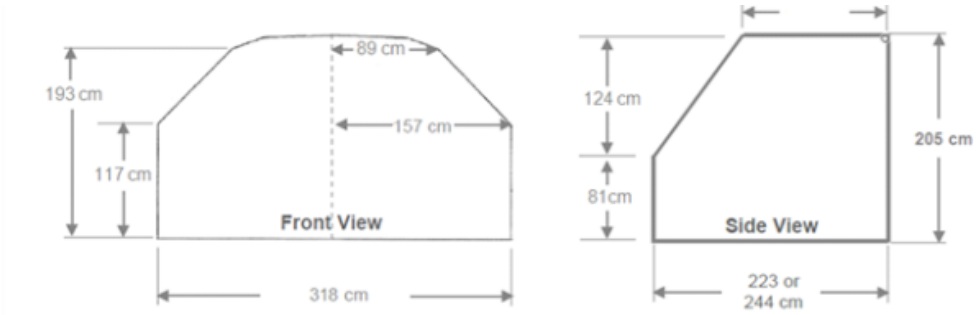

UNCONTROLLED DOCUMENT

UNCONTROLLED DOCUMENT (28 NOVEMBER 2024 21:00:45)

UNCONTROLLED DOCUMENT

11.3 Contour CII (Positions 2-12/14)

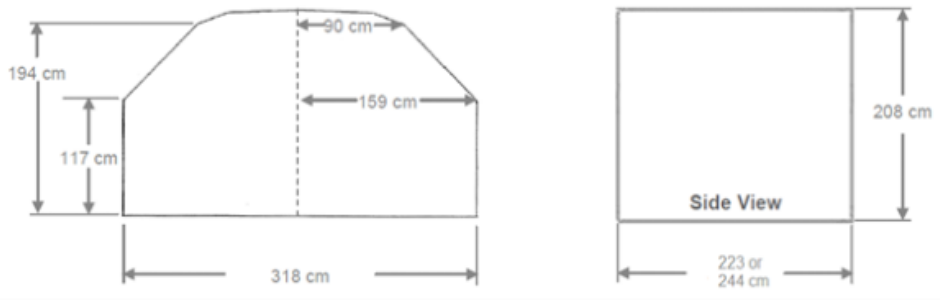

11.4 Contour CIII (Position 13/15)

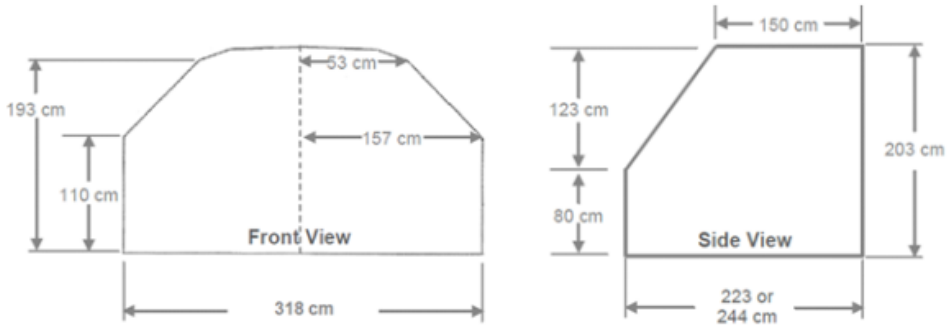

Notes:

- Position 1, the sloped contour on the side view must face forward.
- Position 13 (96”) or position 15 (88”), the sloped contour on the side view must face aft.

UNCONTROLLED DOCUMENT

UNCONTROLLED DOCUMENT

UNCONTROLLED DOCUMENT (28 NOVEMBER 2024 21:00:45)

UNCONTROLLED DOCUMENT

12. Maximum Position Weights

12.1 Maximum Main-deck ULD Weights in Kilograms

	ULD Position														
ULD Size	1	2	3	4	5	6	7	8	9	10	11	12	13	14	15
125”/ 88”	2716	2948						4264		2948					
125"/96"	2856	3216				4652		3216							

12.2 Maximum Lower-deck Compartment Weights in Kilograms

Valid for all registrations except OELNB:

	Forward Holds		Aft Holds	
Compt.	1	2	3	4
Compt. Max (kg)	2469	4447	3527	5606
Hold Max (kg)	4490		7238	
Compt. Volume (m3)	4.6	13.24	13.67	15.91

Valid for OELNB:

	Forward Holds		Aft Holds	
Compt.	1	2	3	4
Compt. Max (KG)	2469	4447	3527	5606
Hold Max (KGS)	4490		7238	
Compt. Volume (m3)	4.6	13.24	13.67	12.88

Note: The compartment volumetric capacity in the lower holds of the B757PCFs are approximately equivalent to 3 LAY ULDs and 1 AKE ULD, all 80% volumetrically filled.

UNCONTROLLED DOCUMENT (28 NOVEMBER 2024 21:00:45)

UNCONTROLLED DOCUMENT

13. Aircraft ULD Compatibility

13.1 Aircraft Configurations

The loading combinations shown here are examples only. More combinations are possible. Full information covering possible loading combinations, and how they interact, can be found in the Sable system.

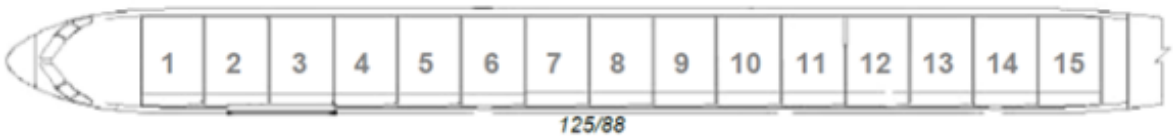

Configuration 1: 15 Lateral 125”/88” ULD positions

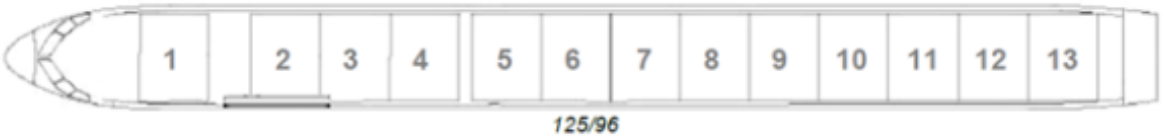

Configuration 2: 13 Lateral 125”/96” ULD positions

Note: Configuration 2 requires locks to be repositioned before it can be used.

UNCONTROLLED DOCUMENT

UNCONTROLLED DOCUMENT

UNCONTROLLED DOCUMENT (28 NOVEMBER 2024 21:00:45)

UNCONTROLLED DOCUMENT

13.2 ULD Compatibility Table

The following ULD type loading restrictions apply. The ULD type can be loaded on positions marked with a 'Y'. The ULD type cannot be loaded on positions marked with a 'N'.

		ULD Type				
	Pos	AAA	AAC/ LAY	AAJ/ LAK	PAG/ PAJ	PMC
Configuration 1	1	Y1	Y2	Y	Y	N
	2	Y	Y	Y	Y	N
	3	Y	Y	Y	Y	N
	4	Y	Y	Y	Y	N
	5	Y	Y	Y	Y	N
	6	Y	Y	Y	Y	N
	7	Y	Y	Y	Y	N
	8	Y	Y	Y	Y	N
	9	Y	Y	Y	Y	N
	10	Y	Y	Y	Y	N
	11	Y	Y	Y	Y	N
	12	Y	Y	Y	Y	N
	13	Y	Y	Y	Y	N
	14	Y	Y	Y	Y	N
	15	N	Y3	Y	Y	N
Configuration 2	1	N	N	N	N	Y
	2	N	N	N	N	Y
	3	N	N	N	N	Y
	4	N	N	N	N	Y
	5	N	N	N	N	Y
	6	N	N	N	N	Y
	7	N	N	N	N	Y
	8	N	N	N	N	Y
	9	N	N	N	N	Y
	10	N	N	N	N	Y
	11	N	N	N	N	Y
	12	N	N	N	N	Y
	13	N	N	N	N	Y

Y1: AAA6414 and higher not allowed

Y2: AAC8495-9020 not allowed.

Y3: AAC8495-9345, AAC9411-9730 not allowed.

Notes:

- There is limited ceiling clearance. Care must be taken when loading AAA and AAC/LAY ULDs to prevent out-of-gauge ULDs impacting the roof or sidewall lining.
- Position 1: Sloped contour side of ULD shall face forward
- Position 13(96") or 15(88"): Sloped contour side of ULD shall face aft
- Pallet stacks are not allowed on position 1 or position 15 (position 13 for Config. 2) on the main deck.

UNCONTROLLED DOCUMENT (28 NOVEMBER 2024 21:00:45)

14. Loading and Un-Loading

14.1 Un-Loading Sequence

Step 1: Un-load the aft lower deck.

Step 2: Un-load the ULDs on the main deck in the following numbered sequence, and respect standard step un-loading method:



Or for Configuration 2

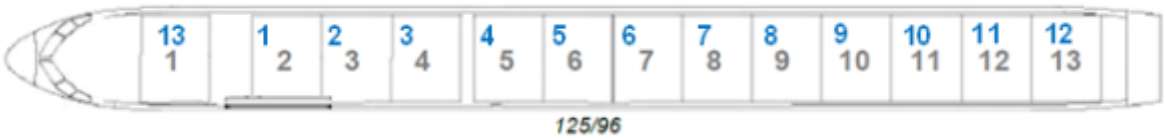

Step 3: Un-load the forward lower deck.

14.2 Loading Sequence

Step 1: Load the forward lower deck.

Step 2: Load the ULDs on the main deck in the following numbered sequence, and respect standard step un-loading method:



Or for Configuration 2

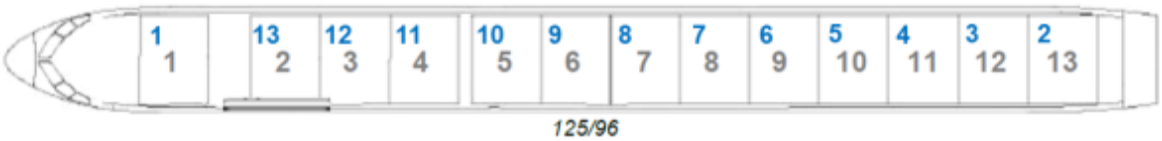

Step 3: Load the aft lower deck.

UNCONTROLLED DOCUMENT
UNCONTROLLED DOCUMENT

UNCONTROLLED DOCUMENT (28 NOVEMBER 2024 21:00:45)

UNCONTROLLED DOCUMENT

14.3 Loading Notes

14.3.1 Counter-ballast

To provide counterbalance during loading and offloading, a combined minimum of 1.000 kg is required between Position 1 and Compartments 1&2 for total aircraft loads in excess of 10.000 kg. Below that figure, a minimum of 10% of the total aircraft load must be loaded between Position 1 and Compartments 1&2 to provide counterbalance.

Note: This only applies during the loading and offloading process.

14.3.2 Simultaneous Loading and Un-loading of Lower-deck Holds

Due to the inherent stability of this aircraft, simultaneous loading and/or un-loading of all lower-deck holds, using up to 2 belt-loaders, at the same time as the main-deck, is allowed. If this procedure is being used, it must be ensured that Position 1, or Position 1 and Hold 1&2, is/are always loaded with a minimum of (or no less than) 1000kg.

14.3.3 Sliding Carpet

After un-loading, the Sliding Carpet should be fully retracted unless the hold will be loaded for an outbound flight. Prior to departure, the Sliding Carpet must be fully retracted. This procedure is to ensure the hold will be serviceable even if the Sliding Carpet should malfunction.

Note: It is prohibited for ground staff to detach the bulkhead assembly.

14.3.4 Lower Lobe Cargo Door Switch Malfunction

The door is supposed to stop in any position when the switch is released. However, it has been known to fail, and continue to close after the control switch is released.

The switch is located in the external control panel aft of each cargo door

Ramp personnel must be aware of this potential situation. They shall:

- Position themselves clear of the door path when operating the door
- Ensure that the door stops moving after releasing the control switch, before moving into the door path area.

14.3.5 Closing Main Cargo Door

The final closure of the Main Cargo Door prior to departure shall only be carried out by a qualified flight crew member or qualified maintenance staff.

After offloading or in case of severe weather, the Main Cargo Door may still be closed by suitably trained ground staff.

14.3.6 Main-deck Cargo Compartment Access

Ground handling staff must access the Main-deck cargo compartment using a High Loader. Usage of the sliding door in the flight-deck to the cargo compartment is not permitted.

14.3.7 Loading of Luggage

Crew baggage should be loaded in the forward hold (compartment 1).
It is not permitted to load crew hold baggage in the cockpit/toilet area.

UNCONTROLLED DOCUMENT (28 NOVEMBER 2024 21:00:45)

UNCONTROLLED DOCUMENT

15. Rigid, Oversized and Special Loads

For guidance on the handling of special loads, please refer to the Special Loads Regional Contact Instructions outlined in Chapter 6 **6.12.22.3 - Determining Loadability of Special Loads**. Where direct operator approval is required, the Regional Airside Team will liaise with Global Airside as needed.

15.1 Floating / Heavy Pallets

Floating Pallets are not permitted on the B757-200PCF.

15.2 Crushable Cargo Requirements

Where Rigid Cargo has been identified, the first loaded position on the aircraft shall be loaded with Crushable Cargo ULDs suitable for protecting the barrier wall against unrestrained Rigid Cargo.

15.3 Piercing Cargo

Piercing cargo may not be loaded on the first and last loaded position on the aircraft.

15.4 Aircraft Engines

Please refer to **15.1 - Floating / Heavy Pallets** and **6.12.7 - Loading of Aircraft Engines**.

UNCONTROLLED DOCUMENT

UNCONTROLLED DOCUMENT

UNCONTROLLED DOCUMENT (28 NOVEMBER 2024 21:00:45)

UNCONTROLLED DOCUMENT

15.5 Live Animals

15.5.1 Horses

Carriage of Horses is not permitted on this aircraft.

15.5.2 Other Live Animals

The following table provides a list of commonly transported animals. If there is a requirement to transport animals not listed below, contact your Special Loads Regional Contact.

<table>
<tr><th></th><th>Main-Deck</th><th>Forward hold</th><th>Aft hold</th></tr>
<tr><td>Day-old chickens</td><td>Yes (max 2 pallets)</td><td rowspan="13">Yes</td><td rowspan="8">No</td></tr>
<tr><td>Monkeys</td><td rowspan="12">Yes</td></tr>
<tr><td>Pigs</td></tr>
<tr><td>Cattle</td></tr>
<tr><td>Sheep or Goats</td></tr>
<tr><td>Dogs or Cats</td></tr>
<tr><td>Small mammals or birds</td></tr>
<tr><td>Topical Fish</td></tr>
<tr><td>Reptiles or Amphibians</td></tr>
<tr><td>Eels</td><td>Yes</td></tr>
<tr><td>Crustaceans or Molluscs</td><td>Yes</td></tr>
<tr><td>Bees</td><td>No</td></tr>
<tr><td>Hatching eggs</td><td>Yes</td></tr>
</table>

15.6 Electric and Hybrid Cars

Electric and Hybrid cars assigned to UN3166/UN3171 are not accepted on any DHA aircraft.

UNCONTROLLED DOCUMENT (28 NOVEMBER 2024 21:00:45)

UNCONTROLLED DOCUMENT

16. Restricted Commodities Loading

16.1 Radioactive (RRY), Magnetised (MAG) and Cargo Aircraft Only (CAO)

The following Dangerous Good type loading restrictions apply. The Dangerous Good type can be loaded on positions marked with a 'Y'. The Dangerous Good type cannot be loaded on positions marked with a 'N'.

	Position																
DG Type	1	2	3	4	5	6	7	8	9	10	11	12	13	14	15	FWD LD	AFT LD
MAG	N	N	N	N	N	N	N	N	N	Y	Y	Y	Y	Y	Y	N	Y
CAO	Y	Y	Y	Y	Y	Y	Y	Y	Y	Y	Y	Y	Y	Y	Y	N	N
RRY (max. 50 TI combined)	N	N	N	Y	Y	Y	Y	Y	Y	Y	Y	Y	Y	Y	Y	N	N
RRY (max. 200 TI combined)	N	N	N	N	Y	Y	Y	Y	Y	Y	Y	Y	Y	Y	Y	N	N

Note: Cargo Aircraft Only (CAO) can be loaded on any Main Deck position 1 to 15 provided they are loaded accessible. Accessible means that:

- The CAO is loaded on a pallet
- All positions forward of the CAO are loaded with 125"/88"-96" pallets with aisle

The following load incompatibilities between AVI, HEG, LHO and FIL in the lower holds and RRY on the main deck apply:

If this special load …	**… Is loaded into lower-deck compartment …**	**… then max TI and allowed main-deck positions are …**		
		Max 50.0 TI together on positions	Max 100.0 TI together on positions	Max 200.0 TI together on positions
AVI, HEG, LHO	**Forward Hold**	6-15	8-15	8-15
FIL		8-15	9-15	10-15
AVI, HEG, LHO	**Aft hold**	4-7 and 15	5-6	**Not allowed**
FIL		4-9	5-9	9

UNCONTROLLED DOCUMENT (28 NOVEMBER 2024 21:00:45)

UNCONTROLLED DOCUMENT

UNCONTROLLED DOCUMENT

UNCONTROLLED DOCUMENT

16.2 Dry Ice

Observe the followings limits when loading ICE

2% Package Sublimation	Max. ICE allowed per hold in KG		
	Main Deck	FWD Hold	AFT Hold
Dual air condition pack operation	1957	59	87
Single air condition pack operation	1347		

ULDs carrying more than 300kg of Dry Ice with a sublimation rate of 2% shall be loaded in position 5 and behind.

1% Package Sublimation	Max. ICE allowed per hold in KG		
	Main Deck	FWD Hold	AFT Hold
Dual air condition pack operation	3914	59	87
Single air condition pack operation	2694		

1% Package Sublimation LEJ-GVA-LEJ only	Max. ICE allowed per hold in KG		
	Main Deck	FWD Hold	AFT Hold
Dual air condition pack operation	4948	57	88
Single air condition pack operation	3959		

0.37% Package Sublimation	Max. ICE allowed per hold in KG		
	Main Deck	FWD Hold	AFT Hold
Dual air condition pack operation	10579	59	87
Single air condition pack operation	7280		

Mixed Package Limit Calculation

To ensure dry ice limits are respected when mixed package types are being transported, the following formula can be used for each cargo compartment, the value must be less than 1.0;

$$\frac{\text{kg } 2\%}{\max 2\%\text{ kg}} + \frac{\text{kg } 1\%}{\max 1\%\text{kg}} + \frac{\text{kg } 0.37\%}{\max 0.37\%\text{ kg}} < 1.0$$

E.g. If we were transporting 500kg of 2% sublimation rate packing, 700kg of 1% and 1300kg of 0.37% on the main deck;

$$\frac{500\text{kg}}{1957\text{ kg}} + \frac{700\text{ kg}}{3914\text{ kg}} + \frac{1300\text{kg}}{10579\text{kg}} = 0.56 < 1.0$$

UNCONTROLLED DOCUMENT (28 NOVEMBER 2024 21:00:45)

UNCONTROLLED DOCUMENT

16.2.1 Dry Ice (ICE) and Live Animals (AVI)

For the transport of AVI and Dry Ice on the MD, the following Dry Ice limits must not be exceeded.

Package Sublimation Rate	Main deck limits in Kilograms
2%	965
1 %	1566
0,37 %	5215

16.3 Lithium Batteries

Please see the Global Supplementary Operational Document **Lithium Battery Loadability Consolidation Table** for the current UN3480 Section IA/IB (RBI), UN3090 Section IA/IB (RBM), UN3481 Section I (RLI), UN3091 Section I (RLM) load ability limits.

UNCONTROLLED DOCUMENT

UNCONTROLLED DOCUMENT

UNCONTROLLED DOCUMENT (28 NOVEMBER 2024 21:00:45)

UNCONTROLLED DOCUMENT

17. Messaging and Reporting

17.1 Messaging

Standard messaging rules apply.

17.2 Reporting

Standard reporting rules apply.

UNCONTROLLED DOCUMENT

UNCONTROLLED DOCUMENT

UNCONTROLLED DOCUMENT (28 NOVEMBER 2024 21:00:45)

UNCONTROLLED DOCUMENT

18. Load Control Data

18.1 Standard Mass Additions

18.1.1 Additional Crew Members (ACM)

Maximum Number of ACMs:	3
Mass of ACM:	95 kg incl. baggage

18.1.2 Fly Away Kit (FAK) and Ballast

FAK is not carried as standard on this aircraft.

Ballast is not carried as standard on this aircraft.

18.2 Minimum Fuel and Standard Taxi Fuel

Minimum Fuel:	2000 kg
Standard Taxi Fuel:	300 kg

18.3 LMC Restrictions

Payload Maximum LMC:	+/- 500 kg
Fuel Maximum LMC:	+/- 2000 kg

Fuel and Payload LMC figures shall not be added together.

UNCONTROLLED DOCUMENT

UNCONTROLLED DOCUMENT

UNCONTROLLED DOCUMENT (28 NOVEMBER 2024 21:00:45)

UNCONTROLLED DOCUMENT

18.4 Minimum Flight Weight (MFW)

The Minimum Flight Weight is the minimum weight which the aircraft must maintain for the entire duration of a flight.

For empty or lightly loaded flights, physical ballast is required to reach the MFW.

The payload / ballast required to be loaded on an aircraft in order to maintain MFW can be calculated as the difference between the MFW and the Dry Operating Weight (DOW). The MFW and DOW can be found in **Aircraft Index and Classification**.

18.5 DOCUMENTATION

Due to the introduction of the digital OFP, a printed version of the Lido OFP & Briefing package is not required to be delivered to the flight crew. The acceptance of the flight is performed with a digital signature by the captain so a signed printed copy of the first page of OFP (Acceptance) will not be submitted by the flight crew to the ground crew.

In case the local Aviation authority of the departure station requires proof of acceptance of a flight, a request for retrieval of the acceptance can be submitted to DHA OCC in Vienna.

In case of digital OFP failure, flight crew will request delivery of a printed version of the Lido OFP & Briefing package. In this case, the flight crew will submit a signed printed copy of the first page of OFP (acceptance) to the ground crew.

UNCONTROLLED DOCUMENT

UNCONTROLLED DOCUMENT

UNCONTROLLED DOCUMENT (28 NOVEMBER 2024 21:00:45)

19. Maximum Package Dimensions

19.1 Main Deck (Forward of Main Cargo Door)

Not presently available.

19.2 Forward Hold

HEAVY PACKAGES LIFT ASSISTED											
HEIGHT IN.	WIDTH IN.										
	5	10	15	20	25	30	35	40	45	50	55
	LENGTH IN.										
40	139	129	119	109	99	89	79	69	61	55	50
35	139	129	119	109	99	89	79	69	61	55	50
30	140	129	119	109	99	89	79	69	61	55	50
25	141	129	119	109	99	89	79	69	61	55	50
20	144	130	119	109	99	89	79	69	61	55	50
15	148	132	119	109	99	89	79	69	61	55	50
10	157	136	120	109	99	89	79	69	61	55	50
5	177	146	125	110	99	89	79	69	61	55	50

LIGHT PACKAGES HAND MANEUVERED											
HEIGHT IN.	WIDTH IN.										
	5	10	15	20	25	30	35	40	45	50	55
	LENGTH IN.										
40	151	139	129	119	109	99	89	79	70	63	57
35	192	172	156	144	134	123	113	103	92	83	76
30	239	207	184	166	152	140	130	119	109	98	89
25	290	243	210	186	168	153	141	131	120	108	98
20	290	243	210	186	168	153	141	131	120	108	98
15	290	243	210	186	168	153	141	131	120	108	98
10	290	243	210	186	168	153	141	131	120	108	98
5	290	243	210	186	168	153	141	131	120	108	98

UNCONTROLLED DOCUMENT
UNCONTROLLED DOCUMENT

UNCONTROLLED DOCUMENT (28 NOVEMBER 2024 21:00:45)

19.3 Aft Hold

HEAVY PACKAGES LIFT ASSISTED											
HEIGHT IN.	WIDTH IN.										
	5	10	15	20	25	30	35	40	45	50	55
	LENGTH IN.										
42	135	132	122	112	102	92	82	72	64	57	51
40	135	132	122	112	102	92	82	72	64	58	51
35	135	132	122	112	102	92	82	72	64	58	51
30	135	132	122	112	102	92	82	72	64	58	51
25	135	133	122	112	102	92	82	72	64	58	51
20	135	133	122	112	102	92	82	72	64	58	51
15	135	133	123	112	102	92	82	72	64	58	51
10	135	133	126	112	102	92	82	72	64	58	51
5	135	133	132	115	102	92	82	72	64	58	51

LIGHT PACKAGES HAND MANEUVERED											
HEIGHT IN.	WIDTH IN.										
	5	10	15	20	25	30	35	40	45	50	55
	LENGTH IN.										
42	136	134	133	124	114	104	94	84	75	67	60
40	137	136	134	132	124	113	103	93	83	75	67
35	140	138	136	134	132	129	121	111	100	90	82
30	142	140	138	136	133	131	129	124	113	102	93
25	144	142	140	137	135	132	130	127	122	110	100
20	144	142	140	137	135	132	130	127	122	110	100
15	144	142	140	137	135	132	130	127	122	110	100
10	144	142	140	137	135	132	130	127	122	110	100
5	144	142	140	137	135	132	130	127	122	110	100

Note: To convert from inches to centimetres, multiply by 2.54

UNCONTROLLED DOCUMENT
UNCONTROLLED DOCUMENT

UNCONTROLLED DOCUMENT (28 NOVEMBER 2024 21:00:45)