UNCONTROLLED DOCUMENT

UNCONTROLLED DOCUMENT

CKS B777F
Kalitta Air Cargo B777F

Revision: 4
Date: 25 November 2024

1 Kalitta Air B777F Registrations
2 Aircraft Dimensions
3 Aircraft Servicing Points and Specifications
4 Ground Support Equipment
5 Standard Turnaround Times
6 Safety Areas
7 Strong Wind Conditions
8 Aircraft Door Dimensions
9 Operating Aircraft Doors
10 Compartment Classification and Air-Conditioning
11 Aircraft Cabin Contour Dimensions
12 Maximum Position Weights
13 Aircraft ULD Compatibility
14 Loading and Un-Loading
15 Rigid, Oversized and Special Loads
16 Restricted Commodities Loading
17 Messaging and Reporting
18 Load Control Data
19 Maximum Package Dimensions
20 Contour Drawings
21 Dry ice reference tables

UNCONTROLLED DOCUMENT (25 NOVEMBER 2024 12:43:19)

UNCONTROLLED DOCUMENT

Page	Date	Comment
2	25 November 2024	Registrations N794CK and N795CK added. *(Minor)*
24	25 November 2024	ULD types no longer available in the network removed. *(Minor)*
38	25 November 2024	Global airside replaced with Special Loads Regional Contact. *(Minor)*

UNCONTROLLED DOCUMENT

UNCONTROLLED DOCUMENT

UNCONTROLLED DOCUMENT (25 NOVEMBER 2024 12:43:19)

1. Kalitta Air B777F Registrations

IATA Designator: **K4**
ICAO Designator: **CKS**
Valid for: **N772CK, N773CK, N774CK, N775CK, N776CK, N793CK, N794CK, N795CK**

UNCONTROLLED DOCUMENT
UNCONTROLLED DOCUMENT

2. Aircraft Dimensions

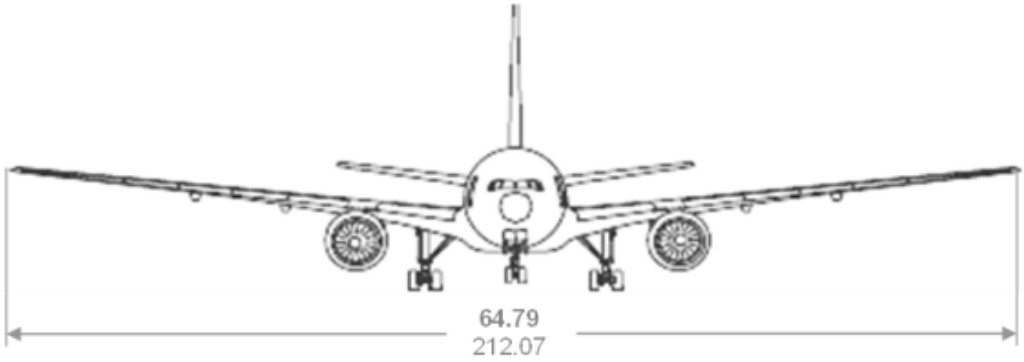

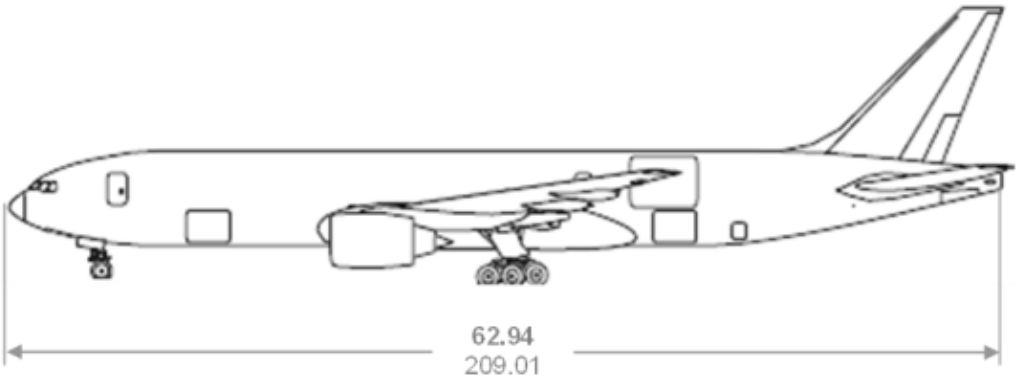

UNCONTROLLED DOCUMENT
UNCONTROLLED DOCUMENT

UNCONTROLLED DOCUMENT (25 NOVEMBER 2024 12:43:19)

UNCONTROLLED DOCUMENT

3. Aircraft Servicing Points and Specifications

3.1 Servicing Points

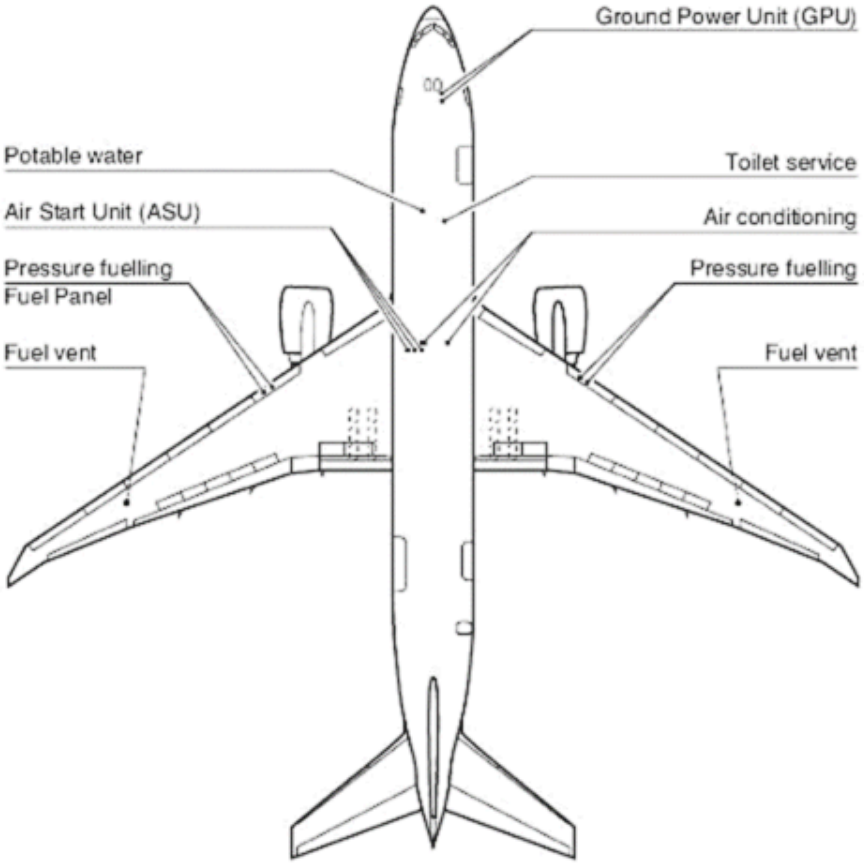

3.2 Servicing Specifications

System	Requirements	Notes
Ground Power Unit	115/200V AC / 90 kVA / 400 Hz	2 GPU connections required (2 x 90 kVA)
Fuel	Jet A1	Fuel Control Panel **on LH wing only**
Air Condition Unit	Maximum Flow Rate 1550 ppm	2 ACU inlets available
Air Start Unit	Minimum Capacity 375 ppm Max. / Min. pressure 50 / 24 psi	3 ASU inlets available. 2 ASUs may be required, depending on flow rate and ambient air temperature.

UNCONTROLLED DOCUMENT (25 NOVEMBER 2024 12:43:19)

4. Ground Support Equipment

4.1 Positioning of GSE

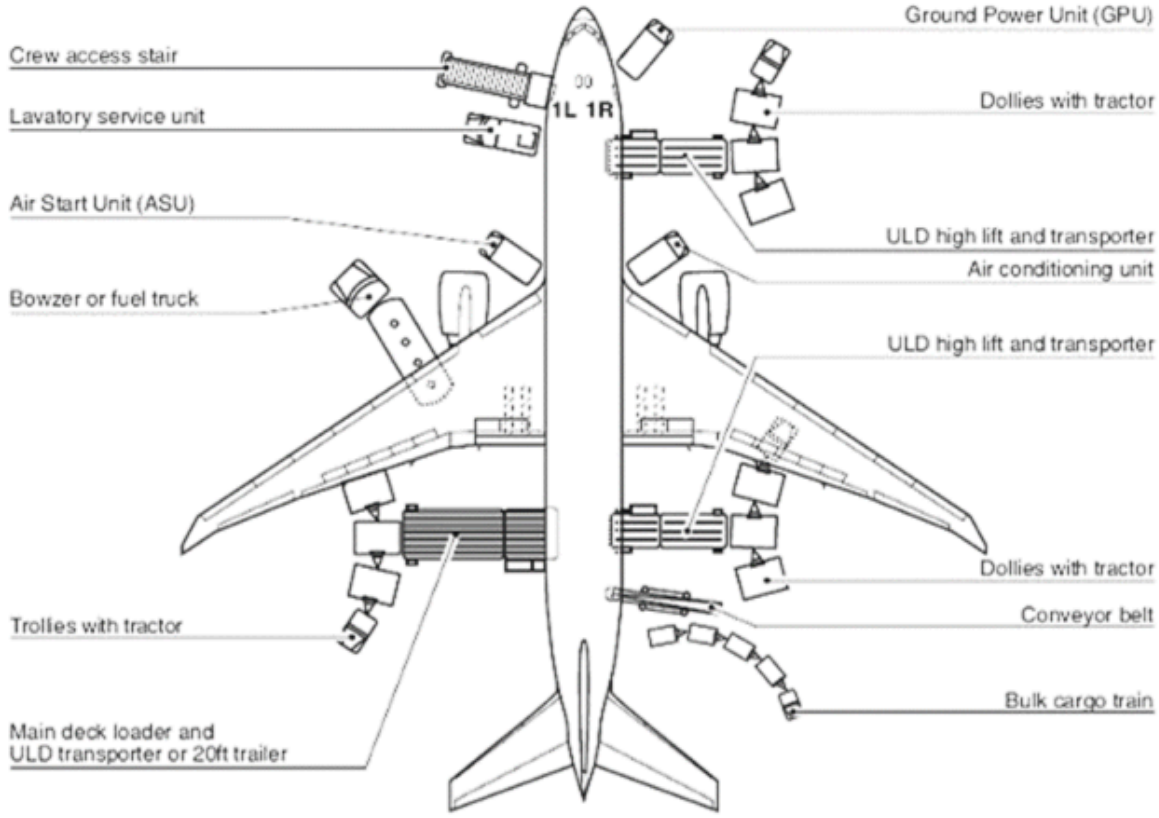

4.2 GSE Requirements

GSE	Type	Quantity
High Loader	Main-deck Standard	1 2
Crew stairs	Platform height 4.65 – 5.04 meters Note: Place top platform 40cm (16in) below sill level	1
Ground Power Unit	Diesel, Electric or Ground-Power	1
Belt Loader	Standard (9 meter recommended)	1
Tractor	N/A	6
Dolly Wagon Main-deck	125/88” and 125/96” capable	Up to 27
	16 & 20ft capable	Up to 9
Dolly Wagon Lower-deck	125/88” and 125/96” capable	Up to 10
	60.4/61.5” or 60.4/125” capable	Up to 15
Belly Container / Wagon	As required	According to load

UNCONTROLLED DOCUMENT
UNCONTROLLED DOCUMENT

UNCONTROLLED DOCUMENT (25 NOVEMBER 2024 12:43:19)

UNCONTROLLED DOCUMENT

5. Standard Turnaround Times

DHL Stations

Turn-around time for a transit stop: 01:30 hour (partial off- and on-load)
Turn-around time for an end stop: 02:00 hour (full off- and on-load)

UNCONTROLLED DOCUMENT

UNCONTROLLED DOCUMENT

UNCONTROLLED DOCUMENT (25 NOVEMBER 2024 12:43:19)

6. Safety Areas

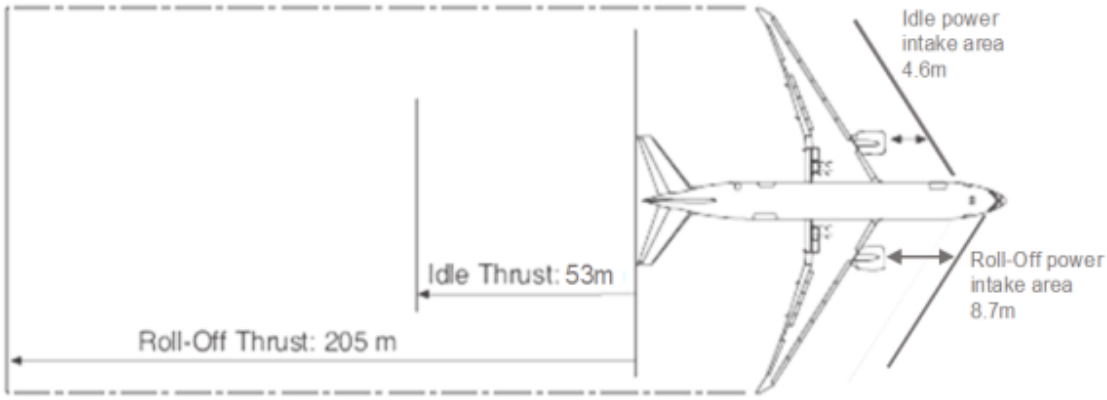

UNCONTROLLED DOCUMENT
UNCONTROLLED DOCUMENT

UNCONTROLLED DOCUMENT (25 NOVEMBER 2024 12:43:19)

UNCONTROLLED DOCUMENT

7. Strong Wind Conditions

If the wind conditions on the ramp reach the following speeds, the corresponding actions shall be taken.

Wind Speed	Action
Up to 40 knots	Normal Operations: All doors can be opened and left open
More than 40 knots	Do not open additional doors
More than 40 knots	All open doors shall be closed immediately

UNCONTROLLED DOCUMENT

UNCONTROLLED DOCUMENT

UNCONTROLLED DOCUMENT (25 NOVEMBER 2024 12:43:19)

8. Aircraft Door Dimensions

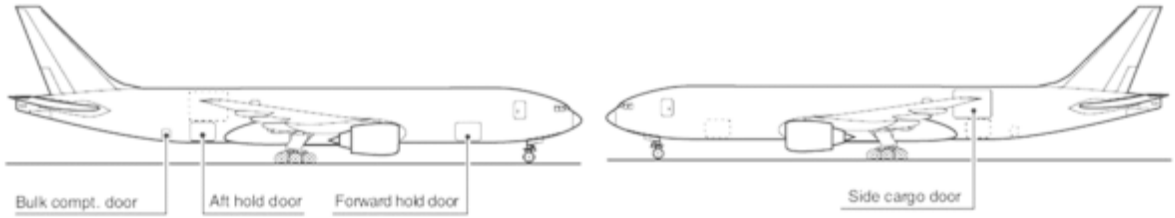

Door width, height, and sill height are defined as follows.

(This drawing is for illustration purposes only and may not be an exact representation of this aircraft type)

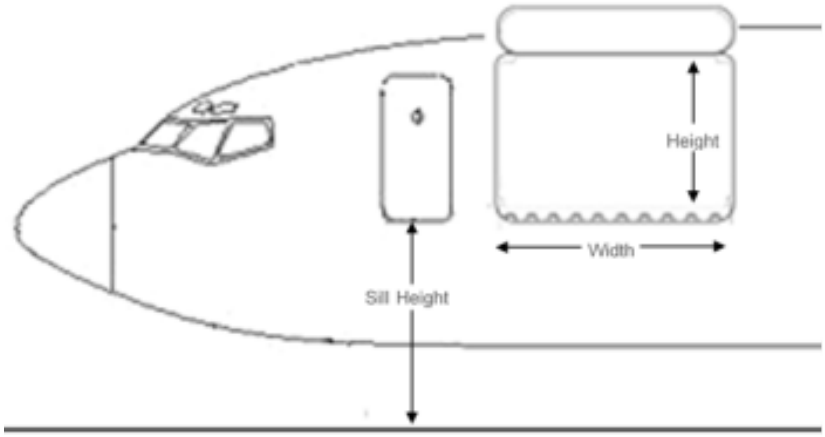

All dimensions are in centimetres and inches.

Door	Door Width		Door Height		Min. Door Sill Height		Max. Door Sill Height	
	CM	Inches	CM	Inches	CM	Inches	CM	Inches
Crew Door	-	-	-	-	465	183	504	198.4
Main Deck	362	142.5	305	120	529	208.3	553	217.7
Forward Hold	269	105.9	170	70	277	109	311	122.4
Aft Hold	289	113.8	170	70	332	130.7	356	140.2
Bulk Hold	90	35.4	121	47.6	350	137.8	378	148.8

Note:

The maximum height for a lower-deck ULD is 163 cm (64 inches).

UNCONTROLLED DOCUMENT
UNCONTROLLED DOCUMENT

UNCONTROLLED DOCUMENT (25 NOVEMBER 2024 12:43:19)

9. Operating Aircraft Doors

Only fully trained and certified staff are allowed to operate the Main Cargo Door.

There are two panels which may be used to operate the Main Cargo Door. One is located forward of the Main Cargo Door in the Main-deck cargo compartment, illustrated by this drawing:

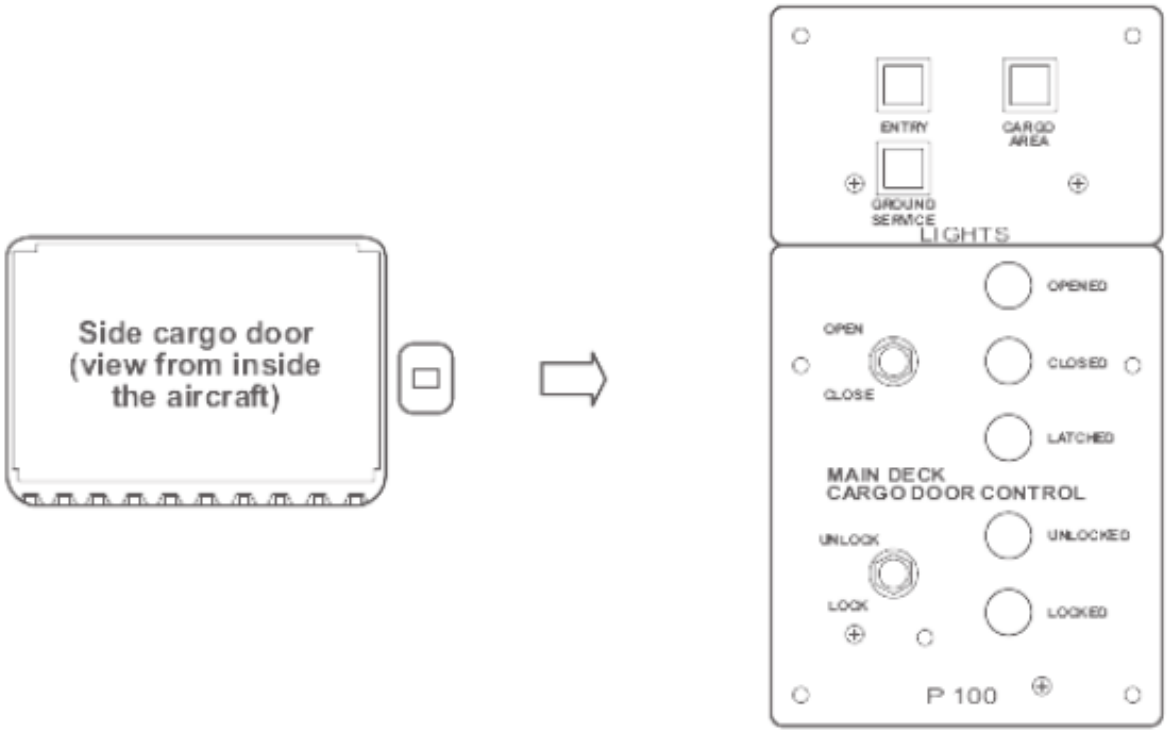

The other panel is located inside and forward of the L1 door.

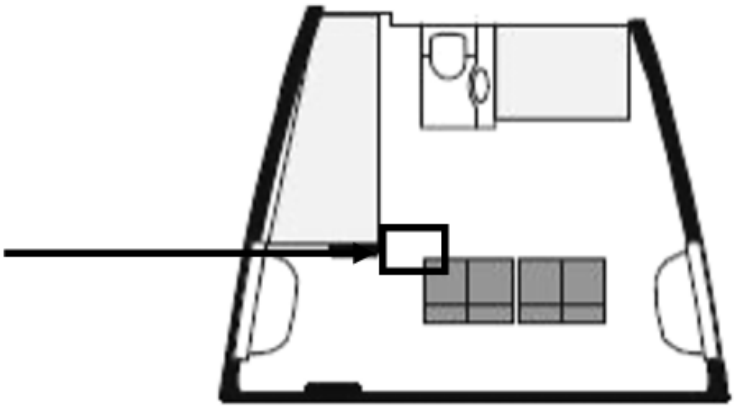

UNCONTROLLED DOCUMENT
UNCONTROLLED DOCUMENT

UNCONTROLLED DOCUMENT (25 NOVEMBER 2024 12:43:19)

UNCONTROLLED DOCUMENT

10. Compartment Classification and Air-Conditioning

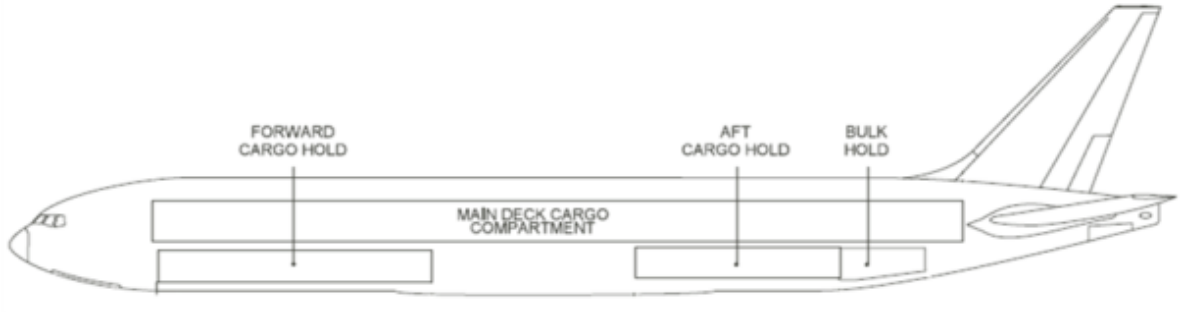

10.1 Compartment Classification

Compartment		Features
Main-deck	Positions AL & AR loaded with 88" ULD **or** 96" Pallet **with** 50 cm (18") isle	- Classification **B**
		- Pressurisation
		- Smoke Detection
		- **Accessible** during flight
	Positions AL & AR loaded with 96" ULD **without** 50 cm (18") aisle	- Classification **E**
		- Pressurisation
		- Smoke Detection
		- **In-accessible** during flight
Lower-deck Compartments 1, 2, 3, 4 and BL1		- Classification **C**
		- Pressurisation
		- Smoke Detection
		- **In-accessible** during flight
		- Fire Suppression

10.2 Air-Conditioning

	Main-deck	Forward Hold	Aft Hold	Bulk Hold
Temperature	5C to 27C			
Heating	Yes			
Heat adjust	Yes			
Cooling	Yes			
Ventilation	Yes			

UNCONTROLLED DOCUMENT (25 NOVEMBER 2024 12:43:19)

UNCONTROLLED DOCUMENT

11. Aircraft Cabin Contour Dimensions

11.1 Aircraft Layout

The aircraft is divided into three contour zones: JI, JIII and JIV.

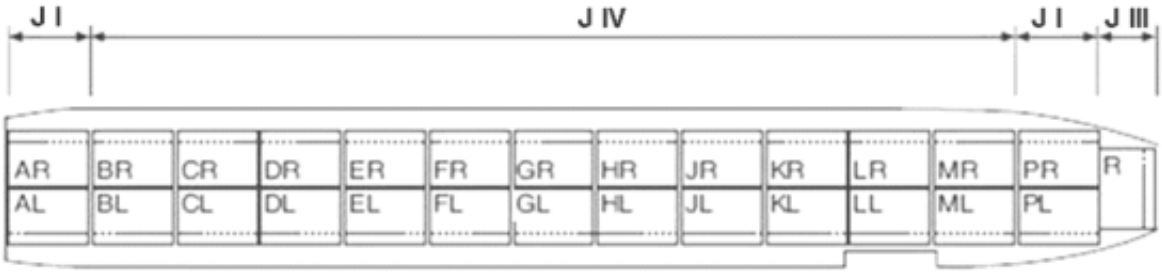

11.2 Contour J1

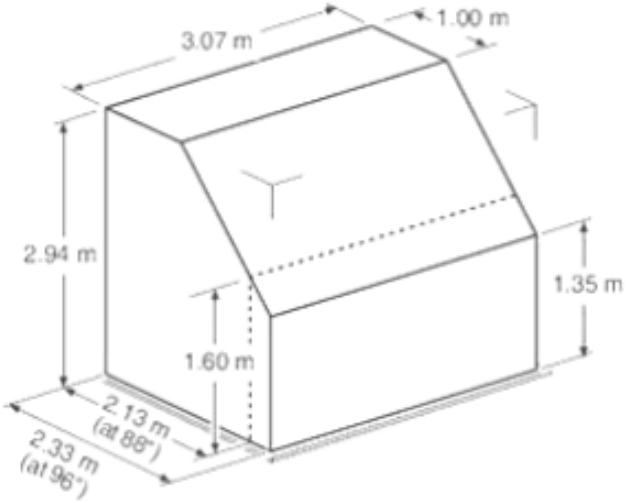

11.3 Contour JIII

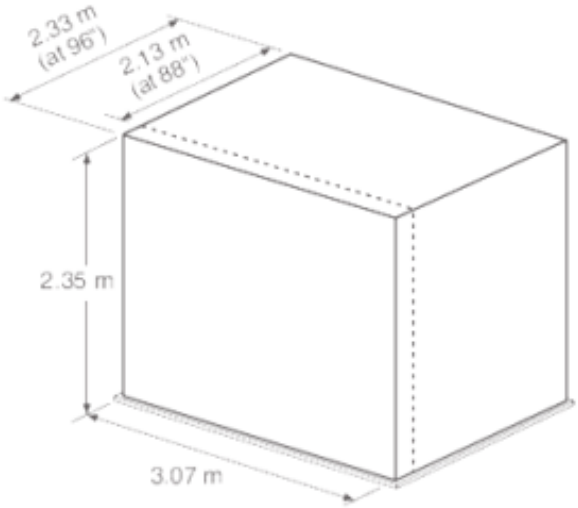

UNCONTROLLED DOCUMENT (25 NOVEMBER 2024 12:43:19)

UNCONTROLLED DOCUMENT

11.4 Contour JIV

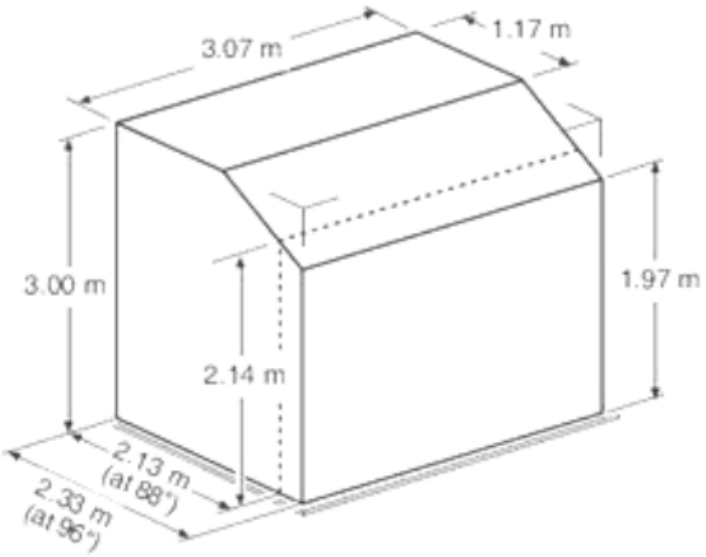

11.5 16’ and 20’ Pallet Position Contours

BL thru HL:

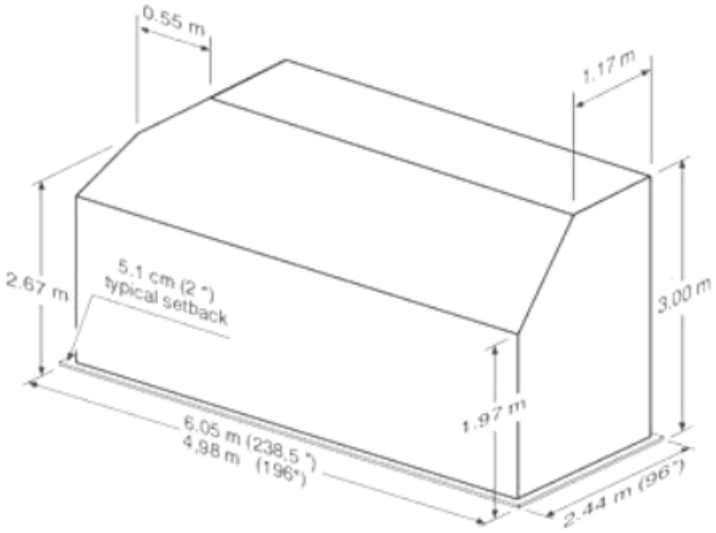

UNCONTROLLED DOCUMENT

UNCONTROLLED DOCUMENT (25 NOVEMBER 2024 12:43:19)

BR thru KR:

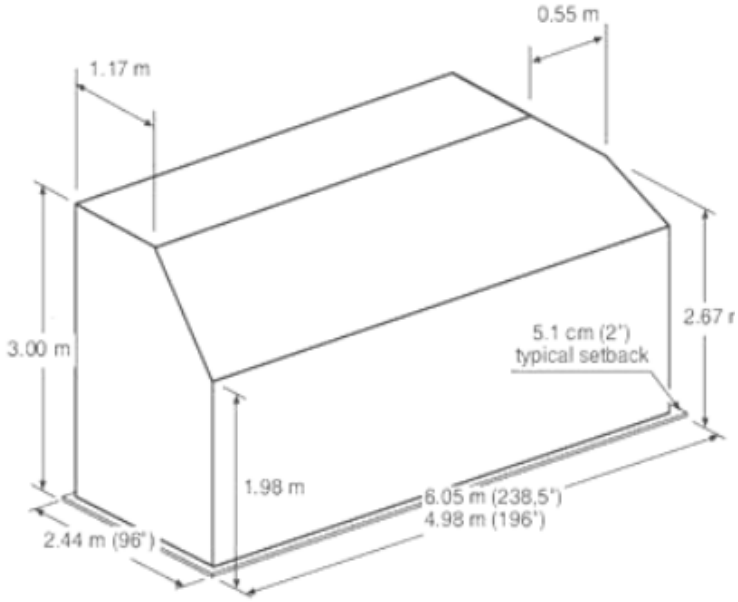

Centre-Line positions EF, GH and JK:

To be Advised

Laterally loaded 16' FL/FR, LL/LR and ML/MR:

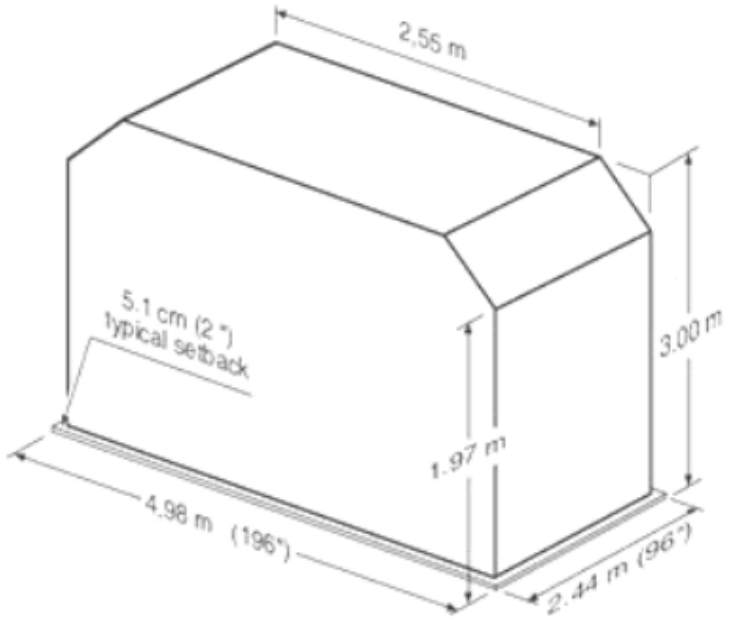

UNCONTROLLED DOCUMENT (25 NOVEMBER 2024 12:43:20)

UNCONTROLLED DOCUMENT

11.6 Centre-line 125”/96” ULD Position Contours:

Positions E to K.

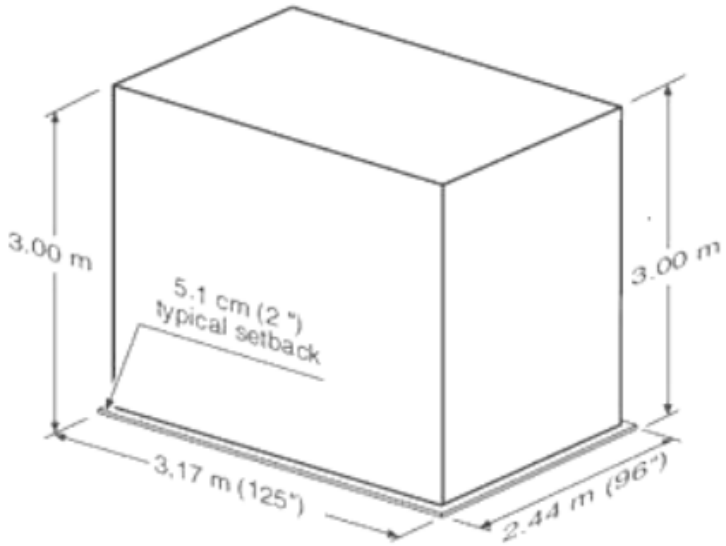

UNCONTROLLED DOCUMENT

UNCONTROLLED DOCUMENT

UNCONTROLLED DOCUMENT (25 NOVEMBER 2024 12:43:20)

12. Maximum Position Weights

12.1 Maximum Main-deck ULD Weights in Kilograms

	ULD Position														
ULD Size	A	B	C	D	E	F	G	H	J	K	L	M	P	R	
88” Twin-track	5896					6032			5896					3233	
96” Twin-track						6803								3527	
16ft right	9246				11339				9246			9246			
16ft left															
20 ft right	11250				11339				11339			11250			
20 ft left															
16ft Centre					11339										
20ft Centre															
96” Centre	5896					6803					5896				
	A	AB	BC	CD	DE	EF	FG	G	GH	HJ	JK	L	LM	MP	P
16ft lateral	6270					11339					6270				
Max. running Load (kg/m)	2570					4677			2570						

12.2 Maximum Main-deck ULD Weights in Pounds

	ULD Position														
ULD Size	A	B	C	D	E	F	G	H	J	K	L	M	P	R	
88” Twin-track	13000					13300			13000					7128	
96” Twin-track						15000								7776	
16ft right	20384				25000				20384			20384			
16ft left															
20 ft right	24800				25000				25000			24800			
20 ft left															
16ft Centre					25000										
20ft Centre															
96” Centre	13000					15000					13000				
	A	AB	BC	CD	DE	EF	FG	G	GH	HJ	JK	L	LM	MP	P
16ft lateral	13822					25000					13822				
Max. running Load (lbs/m)	18589					33829			18589						

UNCONTROLLED DOCUMENT
UNCONTROLLED DOCUMENT

UNCONTROLLED DOCUMENT (25 NOVEMBER 2024 12:43:20)

12.3 Additional Restrictions for Main-deck loads

12.3.1 Lateral Imbalance

The maximum lateral imbalance depends on the actual take-off or landing weight and can be derived from the following table. In general, the higher the take-off or landing weight, the lower the maximum allowed lateral imbalance. It is always the more restrictive weight that applies.

Difference Weight between left and right side (kg)	Restrictions	
	MTOW (kg)	MLAW (kg)
Up to 11.000	No restriction	
12.000	341169	257042
13.000	340614	256728
14.000	340081	256413
15.000	339508	256099
16.000	338954	255784
17.000	338400	255470
18.000	337846	255155
19.000	337292	254841
20.000	336739	254527
21.000	336185	254212
22.000	335631	253898
23.000	335077	253583
24.000	334523	253269
25.000	333970	252955
26.000	333418	252640
27.000	332862	252326
28.000	332308	252011
29.000	331754	251697
30.000	331200	251382
31.000	330647	251068
32.000	330093	250754
33.000	329539	250439
34.000	328985	250125
35.000	328431	249810
36.000	327878	249496
37.000	327324	249181
38.000	325770	248867

12.3.2 Maximum Lateral Unsymmetrical Load

Maximum unsymmetrical load restrictions only apply if any ULD in twin-row configuration weighs more than 4500 kg. If so, then the ULD in the opposite side may have a restricted maximum weight.

These restrictions have been incorporated into the Sable system.

UNCONTROLLED DOCUMENT
UNCONTROLLED DOCUMENT

UNCONTROLLED DOCUMENT (25 NOVEMBER 2024 12:43:20)

UNCONTROLLED DOCUMENT

12.4 Maximum Lower-deck Compartment Weights

12.4.1 Forward Hold (Pounds)

Compt	Position	Max. Gross Weight per ULD (in kilograms)				Max. running	Max.
		88"/125"	96"/125"	60.4"/61.5" (AKE)	60.4"/125" (ALP)	Load (kg/m)	Capacity
1	11P	10309	11248			4607	67498
	12P						
	13P						
	11L/R - 14L/R			3500	7000		
2	21P	4676	5102				
	22P						
	23P	5102	6350			6847	
	21 L/R - 25 L/R			3500	7000	4607	

12.4.2 Forward Hold (Kilograms)

Compt	Position	Max. Gross Weight per ULD (in kilograms)				Max. running	Max.
		88"/125"	96"/125"	60.4"/61.5" (AKE)	60.4"/125" (ALP)	Load (kg/m)	Capacity
1	11P	4676	5102			2090	30617
	12P						
	13P						
	11L/R - 14L/R			1588	3175		
2	21P	4676	5102				
	22P						
	23P	5102	6350			3106	
	21 L/R - 25 L/R			1588	3175	2090	

12.4.3 Aft Hold (Pounds)

Compt	Position	Max. Gross Weight per ULD (in Pounds)				Max. running	Max.
		88"/125"	96"/125"	60.4"/61.5" (AKE)	60.4"/125" (ALP)	Load (kg/m)	Capacity
3	31P	11248	14000			6847	49000
	32P	10309	11248			4607	
	31L/R - 33L/R			3500	7000		
4	41P	10309	11248				
	42P						
	41L/R - 44L/R			3500	7000		

UNCONTROLLED DOCUMENT (25 NOVEMBER 2024 12:43:20)

12.4.4 Aft Hold (Kilograms)

Compt	Position	Max. Gross Weight per ULD (in kilograms)				Max. running	Max.
		88"/125"	96"/125"	60.4"/61.5" (AKE)	60.4"/125" (ALP)	Load (kg/m)	Capacity
3	31P	5102	6350			3106	22226
	32P	4676	5102			2090	
	31L/R - 33L/R			1588	3175		
4	41P	4676	5102				
	42P						
	41L/R - 44L/R			1588	3175		

12.4.5 Bulk Hold

Due to the FAK loaded in Compartment BL1, the available space for loading freight is limited. For information regarding available weight and volume for each aircraft registration, please refer to the 'INCC Belly Capacity List' Excel spread sheet. The spread sheet can be found in Q-Pulse by searching for 'INCC Belly Capacity List'. Note: The available weight / volume may be different for aircraft registrations within the same fleet, therefor it is important to check the spread sheet prior to planning the load.

The Bulk Holds should only be used to load Last Minute Freight (LMF).

UNCONTROLLED DOCUMENT
UNCONTROLLED DOCUMENT

UNCONTROLLED DOCUMENT (25 NOVEMBER 2024 12:43:20)

12.5 Weight Restrictions due to Missing or Broken Restraints

Please refer to the Sable system for restrictions when one or more restraints are unserviceable around any given position, on either the Main-Deck or Lower-Deck.

The chart below may be used for planning and training purposes, and reflects the actual restriction incurred if one or more restraints around any given position are damaged or missing.

12.5.1 Main deck (max. Weight per ULD in Kilograms)

ULD	missing restraint	A	B	C	D	E	F	G	H	J	K	L	M	P	R
88" × 125" fwd or aft	one			N/R				N/R				N/R			2 350
88" × 125" upward				5 483				5 757				5 896			N/R
88" × 125" side				N/R				5 796				4 954			N/R
88" × 125" fwd or aft	two			4 696				5 426				4 703			1 935
88" × 125" upward				4 829				5 521				5 724			2 833
88" × 125" side				5 515				4 391				3 663			2 550
96" × 125" fwd or aft	one			N/R				6 636				N/R			n/r
96" × 125" upward				N/R				N/R				N/R			3 318
96" × 125" side				5 442				N/R				4 975			2 350
96" × 125" fwd or aft	two			4 672				4 679				4 679			N/R
96" × 125" upward				5 620				N/R				5 620			2 825
96" × 125" side				3 953				6 457				3 727			1 935
Longitudal loading															
96"×196" (16 ft.) right	one			6 933				8 504		6 933					
96"×196" (16 ft.) left															
96"×196" (16 ft.) right	two			4 622				5 669		4 622					
96"×196" (16 ft.) left															
96"×238.5" (20 ft.) right	one			9 244				N/R		9 244					
96"×238.5" (20 ft.) left															
96"×238.5" (20 ft.) right	two			6 933				8 573		6 933					
96"×238.5" (20 ft.) left								8 504							
Lateral loading															
96"×196" (16 ft.) fwd or aft	one						N/R					6 268			
96"×196" (16 ft.) up / side							9 834					5 995			
96"×196" (16 ft.) fwd or aft	two						8 932					6 268			
96"×196" (16 ft.) up / side							6 920					4 132			
Center loading															
96"×125"	one							6 247							
96"×125"	two							4 639							
96"×196" (16 ft.) up/side	one							10 179							
96"×196" (16 ft.) fwd/aft								8 504							
96"×196" (16 ft.) up/side	two							8 219							
96"×196" (16 ft.) fwd/aft								5 669							
96"×238.5" (20 ft.) up/side	one							10 327							
96"×238.5" (20 ft.) fwd/aft								N/R							
96"×238.5" (20 ft.) up/side	two							9 296							
96"×238.5" (20 ft.) fwd/aft								8 504							

UNCONTROLLED DOCUMENT
UNCONTROLLED DOCUMENT

UNCONTROLLED DOCUMENT (25 NOVEMBER 2024 12:43:20)

12.5.2 Forward lower deck (max. Weight per ULD in Kilograms)

60,4" x 61,5"
or 60,4" x 125"

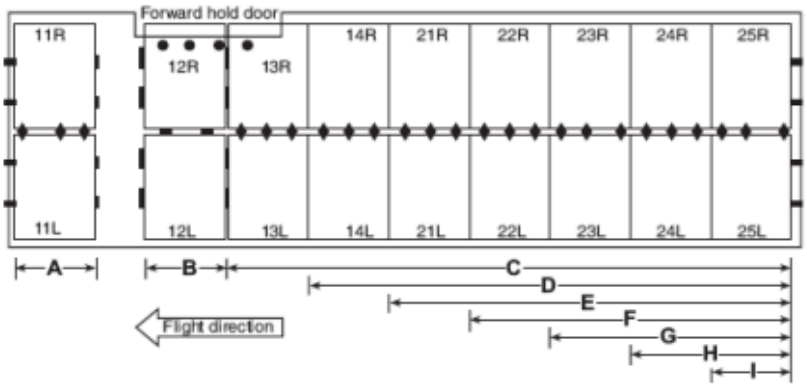

	Max. weight per zone and lane for 60,4"x 61,5" ULD (incl. stack loading)								
Zone	A	B	C	D	E	F	G	H	I
Max. 1 fwd **or** aft	1 587	1 587	9 507	8 042	7 937	6 350	4 000	3 175	1 587
Single ULD	Max. 3 vertical / side restraints may be missing without restriction. **Exception:** Zone B max. 1 v/s restraints may be missing without restriction.								

	Max. weight per zone and lane for 60,4"x 125" ULD (incl. stack loading)								
Zone	A	B	C	D	E	F	G	H	I
Max. 1 fwd **and** 1 aft	3 175	3 009	10128	9 085	9 085	9 085	4 517	4 517	3 175
Single ULD	Max. 1 vertical / side restraints may be missing without restriction. **Exception:** Zone B max. 2 v/s restraints may be missing without restriction.								

88" x 125"

Restraint		**ULD positions (restriction in kg.)**					
Direction	No. missing	11P	12P	13P	21P	22P	23P
All (except vertical)	1	3 828				3 469	3 828
	2	2 549				2 313	2 549
Vertical	up to 5	no restriction					

96" x 125"

Restraint		**ULD positions (restriction in kg.)**					
Direction	No. missing	11P	12P	13P	21P	22P	23P
All (except vertical)	1	3 401	3 828				
	2	2 549					
Vertical	up to 5	no restriction					

UNCONTROLLED DOCUMENT (25 NOVEMBER 2024 12:43:20)

UNCONTROLLED DOCUMENT

12.5.3 Aft lower deck (max. Weight per ULD in Kilograms)

60,4" x 61,5"
or 60,4" x 125"

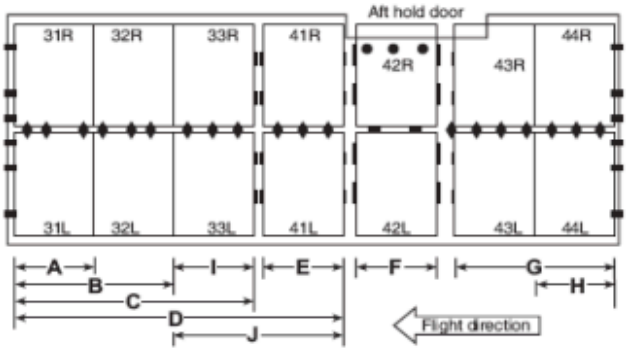

	Max. weight per zone and lane for 60,4"x 61,5" (incl. stack loading)									
Zone	A	B	C	D	E	J	F	G	H	I
Max. 1 fwd **or** aft	NR	NR	4 000	5 268	1 324	N/R	N/R	N/R	N/R	NR
Single ULD	Max. 3 vertical / side restraints may be missing without restriction. **Exception:** Zone F max. 1 v/s restraints may be missing without restriction.									

	Max. weight per zone and lane for 60,4"x 125" (incl. stack loading)									
Zone	A	B	C	D	E	J	F	G	H	I
Max. 1 fwd **and** 1 aft	NR	4 517	4 517	6 345	1 496	4 939	3 009	N/R	N/R	NR
Single ULD	Max. 1 vertical / side restraint may be missing without restriction. **Exception:** Zone F max. 2 v/s restraints may be missing without restriction.									

88" x 125"

Restraint		ULD positions (restriction in kg.)			
Direction	No. missing	31P	32P	41P	42P
All (except vertical)	1	3 828			
	2	2 549			
Vertical	up to 5	no restriction			

96" x 125"

Restraint		ULD positions (restriction in kg.)			
Direction	No. missing	31P	32P	41P	42P
All (except vertical)	1	3 828			
	2	2 549			
Vertical	up to 5	no restriction			

UNCONTROLLED DOCUMENT (25 NOVEMBER 2024 12:43:20)

13. Aircraft ULD Compatibility

13.1 Main Deck Configurations

The loading combinations shown here are examples only. More combinations are possible. Full information covering possible loading combinations, and how they interact, can be found in the Sable system.

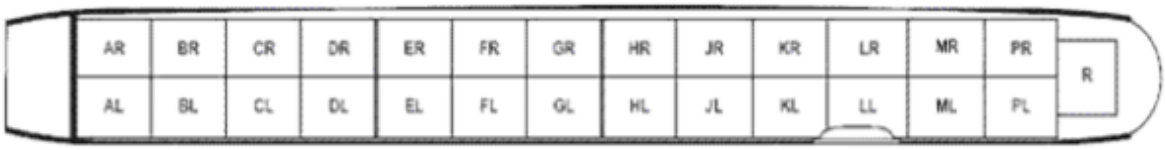

Configuration 1: 1 Lateral Centre-line and 26 Longitudinal Twin-track 125”/96” or 125”/88” positions

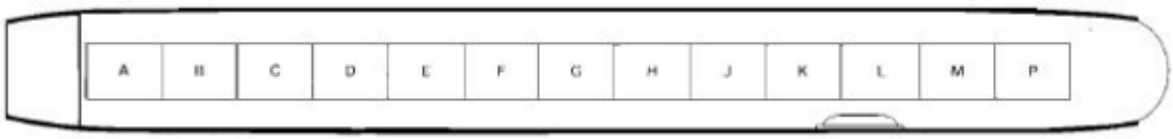

Configuration 2: 13 Centre-line Longitudinal 125”/96” ULDs

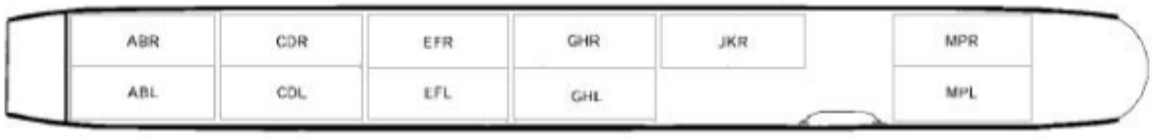

Configuration 3a: 11 Longitudinal Twin-track 16ft or 20ft ULDs

Note: Configuration **3a** is not available in SABLE. Configuration **3b** incorporates positions DER to HJR and DEL to FGL. This configuration is not shown in SABLE.

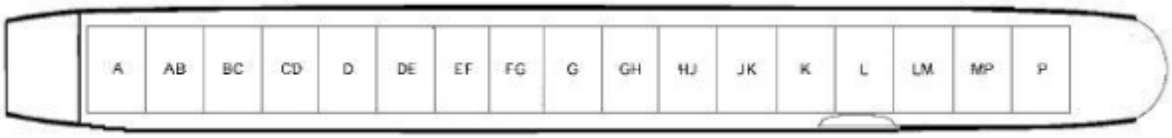

Configuration 4: 17 Lateral 16ft ULDs

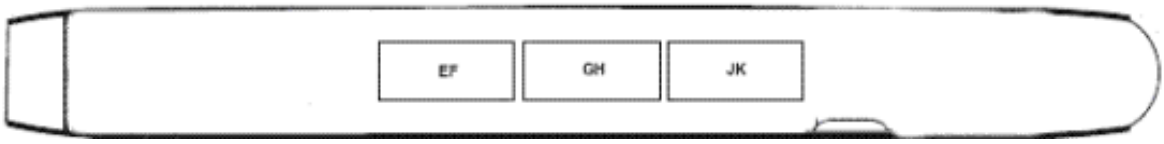

Configuration 5a: 3 Centreline longitudinal 16ft or 20ft ULDs

Note: Configuration **5b** incorporates positions DE to HJ.

UNCONTROLLED DOCUMENT
UNCONTROLLED DOCUMENT

UNCONTROLLED DOCUMENT (25 NOVEMBER 2024 12:43:20)

13.2 Main Deck ULD Compatibility

The following ULD type loading restrictions apply. The ULD type can be loaded on positions marked with a 'Y'. The ULD type cannot be loaded on positions marked with a 'N'.

		ULD Type																	
	Pos	AAA	AAC/ LAY	AAJ/ LAK	AAX	AMA	AMD	AMH	AMJ	AML	AMP	AMV	AMX	HMJ	PAG	PMC	PGA	PGE	PRA	PZA
1	AL/R	Y	Y	N	Y	N	N	N	N	N	N	N	N	N	Y	Y1	N	N	N	N
	BL/R	Y	Y	Y	Y	N	N	Y	Y	Y	Y	Y	Y	Y	Y	Y	N	N	N	N
	CL/R	Y	Y	Y	Y	N	N	Y	Y	Y	Y	Y	Y	Y	Y	Y	N	N	N	N
	DL/R	Y	Y	Y	Y	N	N	Y	Y	Y	Y	Y	Y	Y	Y	Y	N	N	N	N
	EL/R	Y	Y	Y	Y	N	N	Y	Y	Y	Y	Y	Y	Y	Y	Y	N	N	N	N
	FL/R	Y	Y	Y	Y	N	N	Y	Y	Y	Y	Y	Y	Y	Y	Y	N	N	N	N
	GL/R	Y	Y	Y	Y	N	N	Y	Y	Y	Y	Y	Y	Y	Y	Y	N	N	N	N
	HL/R	Y	Y	Y	Y	N	N	Y	Y	Y	Y	Y	Y	Y	Y	Y	N	N	N	N
	JL/R	Y	Y	Y	Y	N	N	Y	Y	Y	Y	Y	Y	Y	Y	Y	N	N	N	N
	KL/R	Y	Y	Y	Y	N	N	Y	Y	Y	Y	Y	Y	Y	Y	Y	N	N	N	N
	LL/R	Y	Y	Y	Y	N	N	Y	Y	Y	Y	Y	Y	Y	Y	Y	N	N	N	N
	ML/R	Y	Y	Y	Y	N	N	Y	Y	Y	Y	Y	Y	Y	Y	Y	N	N	N	N
	PL/R	Y	Y	Y	Y	N	N	Y	N	Y	Y	Y	N	Y	Y	Y	N	N	N	N
	R	Y	Y	Y	Y	Y	N	Y	Y2	N	Y	Y	N	N	Y	Y	N	N	N	N
2	A	N	N	N	N	Y	N	N	Y	N	Y	N	N	N	N	Y	N	N	N	N
	B	N	N	N	N	Y	Y	Y	Y	Y	Y	N	Y	Y	N	Y	N	N	N	N
	C	N	N	N	N	Y	Y	Y	Y	Y	Y	N	Y	Y	N	Y	N	N	N	N
	D	N	N	N	N	Y	Y	Y	Y	Y	Y	N	Y	Y	N	Y	N	N	N	N
	E	N	N	N	N	Y	Y	Y	Y	Y	Y	N	Y	Y	N	Y	N	N	N	N
	F	N	N	N	N	Y	Y	Y	Y	Y	Y	N	Y	Y	N	Y	N	N	N	N
	G	N	N	N	N	Y	Y	Y	Y	Y	Y	N	Y	Y	N	Y	N	N	N	N
	H	N	N	N	N	Y	Y	Y	Y	Y	Y	N	Y	Y	N	Y	N	N	N	N
	J	N	N	N	N	Y	Y	Y	Y	Y	Y	N	Y	Y	N	Y	N	N	N	N
	K	N	N	N	N	Y	Y	Y	Y	Y	Y	N	Y	Y	N	Y	N	N	N	N
	L	N	N	N	N	Y	Y	Y	Y	Y	Y	N	Y	Y	N	Y	N	N	N	N
	M	N	N	N	N	Y	Y	Y	Y	Y	Y	N	Y	Y	N	Y	N	N	N	N
	P	N	N	N	N	Y	N	N	Y	N	Y	N	N	N	N	Y	N	N	N	N
3a	ABR/L	N	N	N	N	N	N	N	N	N	N	N	N	N	N	N	Y	Y	N	Y
	CDR/L	N	N	N	N	N	N	N	N	N	N	N	N	N	N	N	Y	Y	N	Y
	EFR/L	N	N	N	N	N	N	N	N	N	N	N	N	N	N	N	Y	Y	N	Y
	GHR/L	N	N	N	N	N	N	N	N	N	N	N	N	N	N	N	Y	Y	N	Y
	JKR	N	N	N	N	N	N	N	N	N	N	N	N	N	N	N	Y	Y	N	Y
	MPR/L	N	N	N	N	N	N	N	N	N	N	N	N	N	N	N	Y	Y	N	Y

Y1: PMC with aisle only.

Y2: AMJ loadable with net facing forward.

The following ULD type loading restrictions apply. The ULD type can be loaded on positions marked with a 'Y'. The ULD type cannot be loaded on positions marked with a 'N'.

	ULD Type																		
	Pos	AAA	AAC/ LAY	AAJ/ LAK	AAX	AMA	AMD	AMH	AMJ	AML	AMP	AMV	AMX	HMJ	PAG	PMC	PGA	PGE	PRA	PZA
4	A	N	N	N	N	N	N	N	N	N	N	N	N	N	N	N	N	N	Y	Y
	AB	N	N	N	N	N	N	N	N	N	N	N	N	N	N	N	N	N	Y	Y
	BC	N	N	N	N	N	N	N	N	N	N	N	N	N	N	N	N	N	Y	Y
	CD	N	N	N	N	N	N	N	N	N	N	N	N	N	N	N	N	N	Y	Y
	D	N	N	N	N	N	N	N	N	N	N	N	N	N	N	N	N	N	Y	Y
	DE	N	N	N	N	N	N	N	N	N	N	N	N	N	N	N	N	N	Y	Y
	EF	N	N	N	N	N	N	N	N	N	N	N	N	N	N	N	N	N	Y	Y
	FG	N	N	N	N	N	N	N	N	N	N	N	N	N	N	N	N	N	Y	Y
	G	N	N	N	N	N	N	N	N	N	N	N	N	N	N	N	N	N	Y	Y
	GH	N	N	N	N	N	N	N	N	N	N	N	N	N	N	N	N	N	Y	Y
	HJ	N	N	N	N	N	N	N	N	N	N	N	N	N	N	N	N	N	Y	Y
	JK	N	N	N	N	N	N	N	N	N	N	N	N	N	N	N	N	N	Y	Y
	K	N	N	N	N	N	N	N	N	N	N	N	N	N	N	N	N	N	Y	Y
	L	N	N	N	N	N	N	N	N	N	N	N	N	N	N	N	N	N	Y	Y
	LM	N	N	N	N	N	N	N	N	N	N	N	N	N	N	N	N	N	Y	Y
	MP	N	N	N	N	N	N	N	N	N	N	N	N	N	N	N	N	N	Y	Y
	P	N	N	N	N	N	N	N	N	N	N	N	N	N	N	N	N	N	Y	Y
5a	EF	N	N	N	N	N	N	N	N	N	N	N	N	N	N	N	Y	Y	Y	N
	GH	N	N	N	N	N	N	N	N	N	N	N	N	N	N	N	Y	Y	Y	N
	JK	N	N	N	N	N	N	N	N	N	N	N	N	N	N	N	Y	Y	Y	N

Notes:

If a 20ft ULD is loaded on Position HJR (Config. 3b) it covers the pallet locks of adjacent position(s), either forward or aft, depending on the exact placement of the 20ft ULD. It is then not possible to load 125"/88" or 125"/96" ULDs on adjacent position(s) – either forward *or* aft**.**

If a 20ft ULD is loaded on Position DE (Config. 5b) it covers the pallet locks of adjacent twin-track positions, either forward or aft, depending on the exact placement of the 20ft ULD. It is then not possible to load 125"/88" or 125"/96" ULDs on the adjacent twin-track position – either forward *or* aft.

13.3 Lower Deck Configurations

The loading combinations shown here are examples only. More combinations are possible. Full information covering possible loading combinations, and how they interact, can be found in the Sable system.

13.3.1 Forward Hold

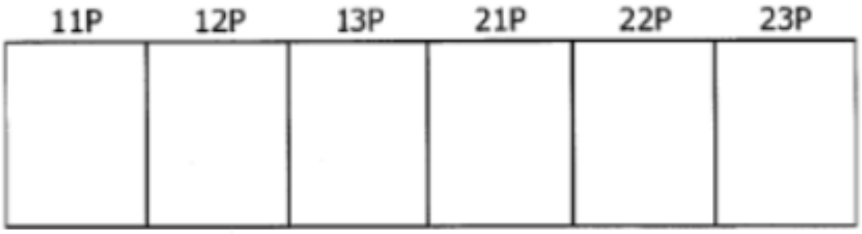

Configuration 1: 6 lateral 125”/96” or 125”/88” ULDs

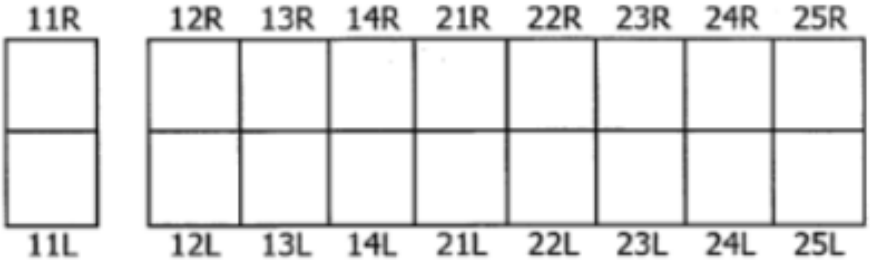

Configuration 2:9 Lateral 125”/60.4” or 18 twin-track 61.5”/60.4” ULDs

Note: LD3 (AKE) and LD11 (ALP) type ULDs are generally stack - loaded and secured by partial load latches around positions 11 and 12.

UNCONTROLLED DOCUMENT
UNCONTROLLED DOCUMENT

UNCONTROLLED DOCUMENT (25 NOVEMBER 2024 12:43:20)

UNCONTROLLED DOCUMENT

Examples of Forward Hold loading combinations:

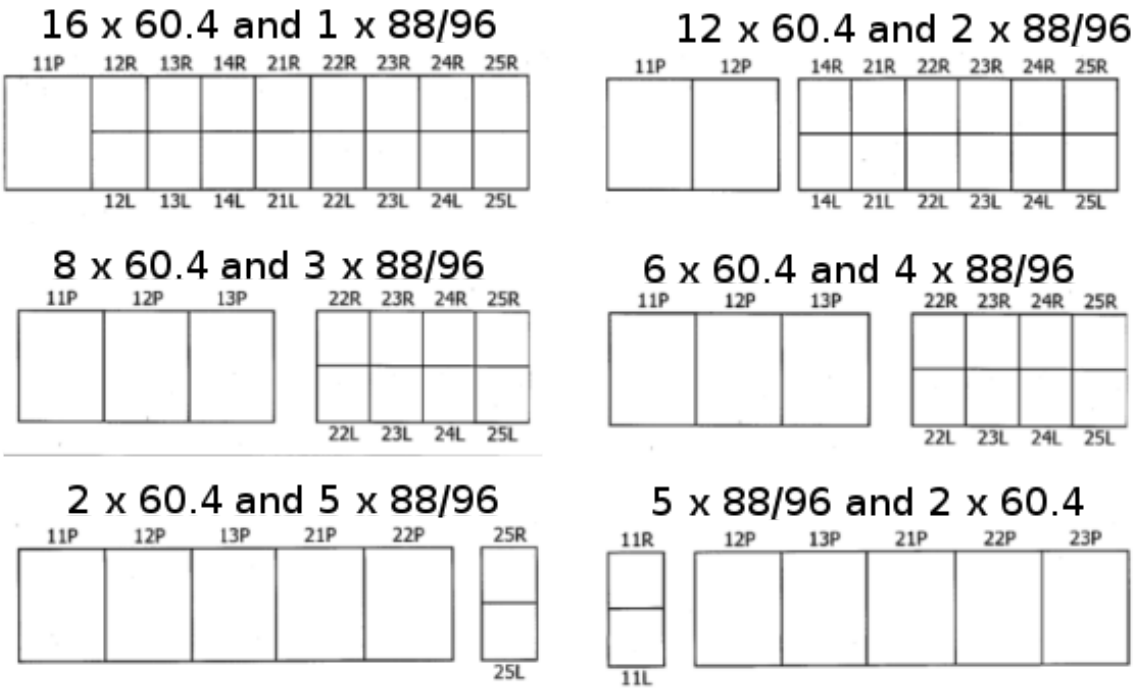

Notes:

Pallet & AKE/ALP: If loading 88" or 96" pallets and 60.4" ULDs together, **88"/96" must be loaded forward of 60.4"** ULDs, e.g. PMC in 12P and AKE from 14L/R and behind. It is impossible to load PAG or PMC in 23P and then load AKE/ALP forward of that

Pos. 11 & 12: Positions 11 (11L/R) and 12 (12L/R) can be locked individually – the restriction that needs to be observed will only apply for combinations starting from 13 (13L/R) to 25 (25L/R)

4 x 60.4 and 4 x 88/96:

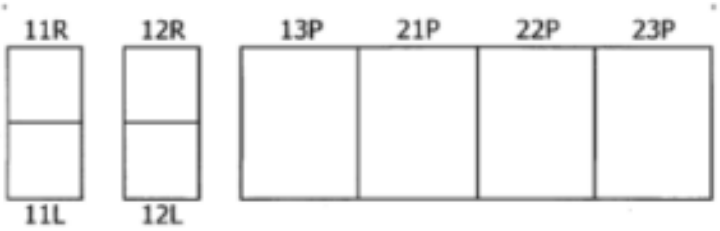

2 x 60.4 and 5 x 88/96:

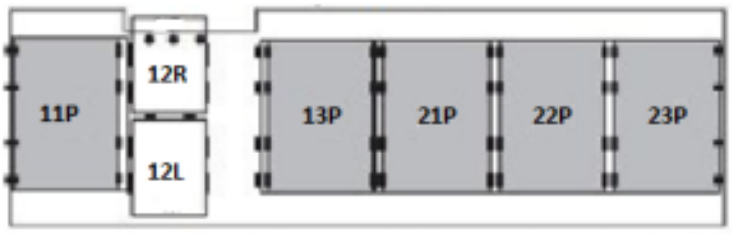

LD3 Single loading of LD3 (AKE) type ULDs is allowed

UNCONTROLLED DOCUMENT (25 NOVEMBER 2024 12:43:20)

13.3.2 Aft Hold

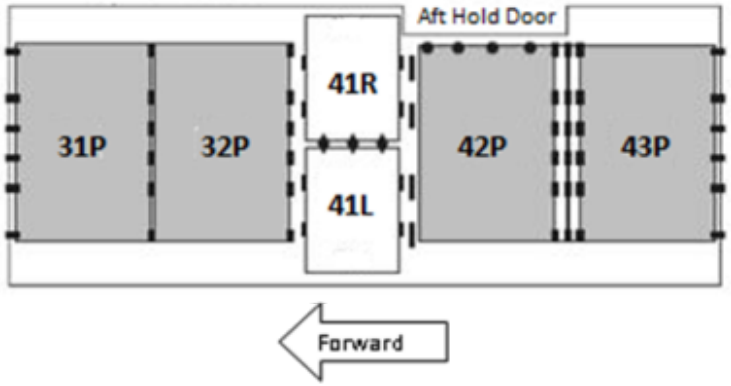

Configuration 1: 4 Lateral 125”/96” or 125”/88” ULDs and 1 125”/60.4” (ALP) ULD or 2 61.5”/60.4” (AKE) ULDs

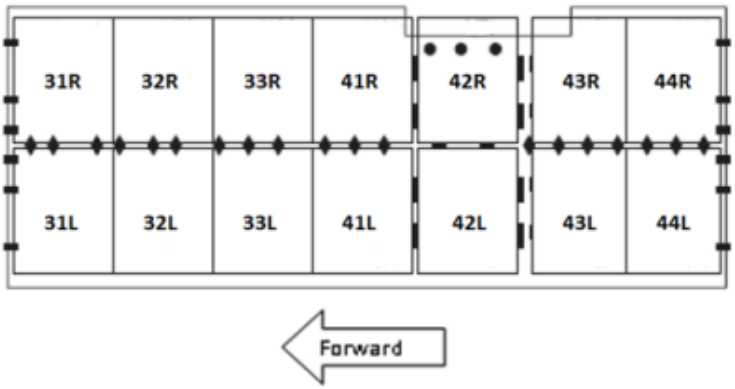

Configuration 2: 7 Lateral 125”/60.4” **or** 14 61.5”/60.4” ULDs

Note: LD3 (AKE) and LD11 (ALP) type ULDs are generally stack- loaded and secured by partial load latches around positions 41 and 42.

UNCONTROLLED DOCUMENT
UNCONTROLLED DOCUMENT

UNCONTROLLED DOCUMENT (25 NOVEMBER 2024 12:43:20)

UNCONTROLLED DOCUMENT

Examples of Aft Hold loading combinations:

10 x 60.4 and 1 x 88/96

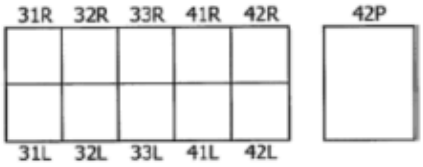

2 x 60.4 and 3 x 88/96 (Combination of 96" on 31P and 88" on 32P is not possible)

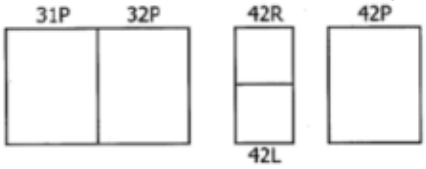

2 x 60.4 and 2 x 88/96 and 2 x 88" * 125"

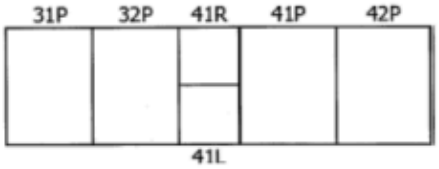

4 x 60.4 and 1 x 88/96 and 2 x 88" * 125"

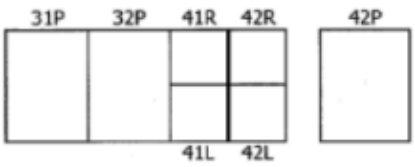

8 x 60.4 and 2 x 88" * 125"

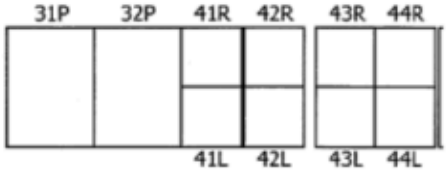

8 x 60.4 and 2 x 88/96

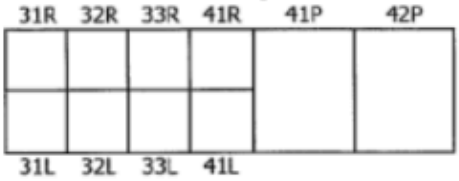

6 x 60.4 and 2 x 88/96 (Combination of 96" on 31P and 88" on 32P is **not** possible)

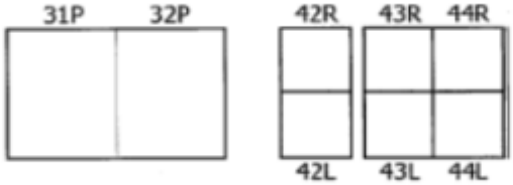

4 x 60.4 and 3 x 88/96 (31P and 32P must be 88")

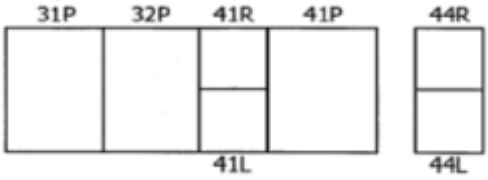

2 x 60.4 and 3 x 88/96 (Combination of 96" on 31P and 88" on 32P is **not** possible)

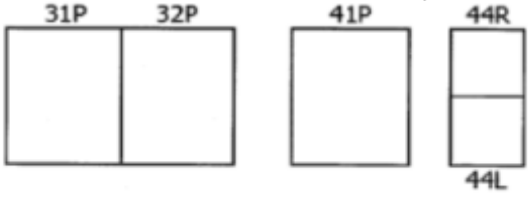

Notes:

LD3/LD11 & 88/96: If loading 41L/R with 2 x LD3 (AKE) or 41 with 1 x LD11 (ALP), 32P must be loaded with an 88" pallet. When loading pallets on 31P and 32P, a combination of 96" pallet in 31P and 88" pallet in 32P is not possible.

LD3: Single loading of LD3 (AKE) type ULDs is allowed.

UNCONTROLLED DOCUMENT (25 NOVEMBER 2024 12:43:20)

13.4 Lower Deck ULD Compatibility

The following ULD type loading restrictions apply. The ULD type can be loaded on positions marked with a 'Y'. The ULD type cannot be loaded on positions marked with a 'N'.

		ULD Type											
	Pos	AAF	AAJ/ LAK	RAP	AMF	AMP	PAG	PMC	AKE	RKN	ALF	ALP	AVA
FWD 1	11P	Y	Y	Y	Y	Y	Y	Y	N	N	N	N	N
	12P	Y	Y	Y	Y	Y	Y	Y	N	N	N	N	N
	13P	Y	Y	Y	Y	Y	Y	Y	N	N	N	N	N
	21P	Y	Y	Y	Y	Y	Y	Y	N	N	N	N	N
	22P	Y	Y	Y	Y	Y	Y	Y	N	N	N	N	N
	23P	Y	Y	Y	Y	Y	Y	Y	N	N	N	N	N
FWD 2	11R/L	N	N	N	N	N	N	N	Y	Y	Y	Y	Y
	12R/L	N	N	N	N	N	N	N	Y	Y	Y	Y	Y
	13R/L	N	N	N	N	N	N	N	Y	Y	Y	Y	Y
	14R/L	N	N	N	N	N	N	N	Y	Y	Y	Y	Y
	21R/L	N	N	N	N	N	N	N	Y	Y	Y	Y	Y
	22R/L	N	N	N	N	N	N	N	Y	Y	Y	Y	Y
	23R/L	N	N	N	N	N	N	N	Y	Y	Y	Y	Y
	24R/L	N	N	N	N	N	N	N	Y	Y	Y	Y	Y
	25R/L	N	N	N	N	N	N	N	Y	Y	Y	Y	Y
AFT 1	31P	Y	Y	Y	Y	Y	Y	Y	N	N	N	N	N
	32P	Y	Y	Y	Y	Y	Y	Y	N	N	N	N	N
	42P	Y	Y	Y	Y	Y	Y	Y	N	N	N	N	N
	43P	Y	Y	Y	Y	Y	Y	Y	N	N	N	N	N
AFT 2	31R/L	N	N	N	N	N	N	N	Y	Y	Y	Y	Y
	32R/L	N	N	N	N	N	N	N	Y	Y	Y	Y	Y
	33R/L	N	N	N	N	N	N	N	Y	Y	Y	Y	Y
	41R/L	N	N	N	N	N	N	N	Y	Y	Y	Y	Y
	42R/L	N	N	N	N	N	N	N	Y	Y	Y	Y	Y
	43R/L	N	N	N	N	N	N	N	Y	Y	Y	Y	Y
	44R/L	N	N	N	N	N	N	N	Y	Y	Y	Y	Y

UNCONTROLLED DOCUMENT
UNCONTROLLED DOCUMENT

UNCONTROLLED DOCUMENT (25 NOVEMBER 2024 12:43:20)

14. Loading and Un-Loading

14.1 Cargo Loading System

Only fully trained and certified staff are allowed to operate the Cargo Loading System (CLS).

The CLS is controlled by the:

- Master Control Panel (MCP)
- Outside Control Panel (OCP)
- Local Control Panel (LCP)
- PDU Retract Panel (PRP)
- Control Panel for 20ft ULDs

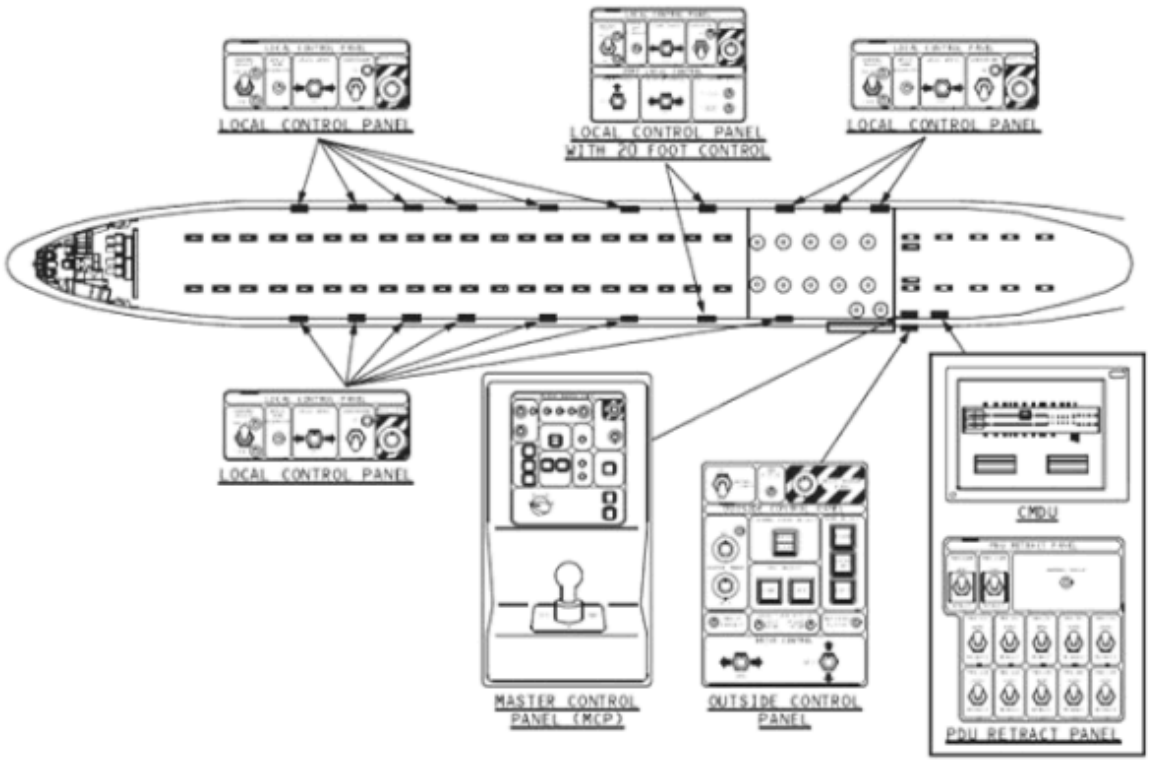

Note: A minimum of 2 persons are required to operate the Main-deck CLS. It is recommended that 3 staff members are made available for the Main-deck, to maximise the efficiency of the un-loading and loading process.

UNCONTROLLED DOCUMENT
UNCONTROLLED DOCUMENT

UNCONTROLLED DOCUMENT (25 NOVEMBER 2024 12:43:20)

UNCONTROLLED DOCUMENT

14.2 Un-Loading Sequence

Step 1: Un-load the aft lower deck.

Step 2: Un-load the ULDs on the main deck in the following numbered sequence, and respect standard step un-loading method:

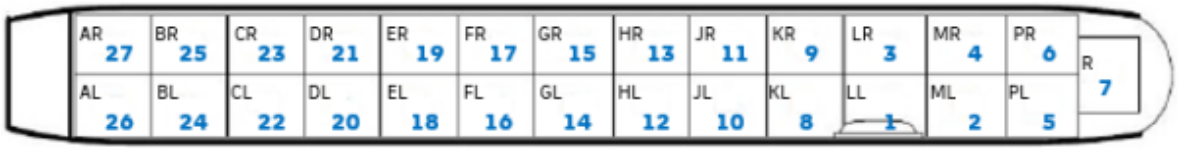

Step 3: Un-load the forward lower deck.

Note: Unloading both sides of the Main-deck simultaneously is the preferred option, but unloading each side separately is also allowed.

14.3 Loading Sequence

Step 1: Load the forward lower deck.

Step 2: Load the ULDs on the main deck in the following numbered sequence, and respect standard step un-loading method:

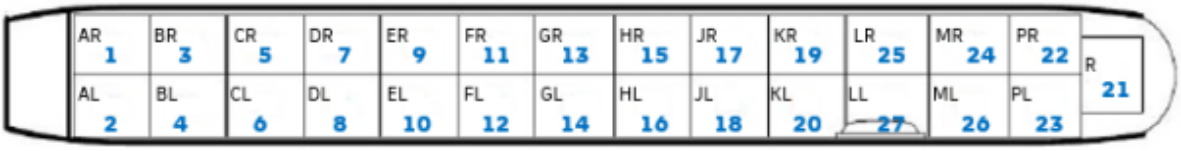

Step 3: Load the aft lower deck.

Note: Loading both sides of the Main-deck simultaneously is the preferred option, but unloading each side separately is also allowed.

If loading both sides simultaneously, particular attention must be given to **ensure all centre-line and side restraints are properly engaged.**

14.3.1 Additional Precautions

Make sure that two persons verify that all locking devices, securing the ULDs, are engaged and operative.

Both persons must sign the Load Plan.

UNCONTROLLED DOCUMENT (25 NOVEMBER 2024 12:43:20)

UNCONTROLLED DOCUMENT

14.4 Loading Notes

14.4.1 Tail-Tipping

The B777 Freighter is a very stable aircraft, and it is possible to load and/or un-load more than one deck at the same time.

As a general rule, once either the FWD hold and/or Main-deck positions AL/AR thru BL/BR have been loaded with a combined minimum of 22.000 lbs (10.000 kg), loading may proceed with minimum risk of tail-tipping regardless of method used. Due care must be exercised if doing so, always ensuring that the actual loading and/or un-loading procedure employed does not result in a tail-tip condition.

14.4.2 CLS Operation

By loading and un-loading both sides of the Main-deck simultaneously, the Cargo Loading System will be utilised most efficiently, reducing turn-around times to the minimum possible. Side-by-side loading and un-loading is possible, but is considerably less efficient, and therefore more time consuming and requiring additional loading resources.

Whilst loading or un-loading the Main-Deck, the High Loader (K-Loader) must be indexed towards the aft of the Main-Deck Cargo Door. Care must be exercised positioning the loader, as incorrect positioning may have a detrimental effect on loading and un-loading efficiency, particularly when the load includes 16 and/or 20 feet ULDs.

A minimum of 2 persons are required to operate the CLS when loading 16 and 20 feet ULDs. It is not possible to rotate a 16 or 20 foot ULD in or out of the aircraft single handed.

All PDUs (Power Drive Units) are software controlled. The failure of any single PDU will not have a negative effect on the CLS' ability to load or unload freight. Should a single PDU fail, the power of adjacent PDUs is sufficient to overcome the breaking action of the failed unit.

The FCT (Freighter Common Turntable) PDUs mounted around the door area are also software controlled, and in the event of a failure will drop below the cargo-deck waterline, allowing for continued and uninterrupted loading and un-loading.

In the unlikely event of total power failure, loading or un-loading is not possible until power has been restored to the CLS.

UNCONTROLLED DOCUMENT

UNCONTROLLED DOCUMENT

UNCONTROLLED DOCUMENT (25 NOVEMBER 2024 12:43:20)

UNCONTROLLED DOCUMENT

14.4.3 Service Point Access

All access to outside service points (GPU, ASU, ACU etc) must be done using a ladder due to the height of the fuselage off the ground. Lower-deck doors of containerised compartments must be opened using technical / maintenance steps to reach the cargo doors. In cases where technical / maintenance steps are not available, it is permitted to use belt-loaders with raised safety rails as long as they do not cause an obstacle. The use of a ULD loader / hi-loader to open / close lower deck doors is prohibited.

14.4.4 Alternative Access to Main-Deck Loader

If the normal access path is blocked, the MDL may be approached driving under the aircraft tail with empty dollies only. Particular care shall be given to prevent impact between tractor / dolly train and the aircraft fuselage. To ensure a safe distance is maintained, a guide-man shall be used at all times.



Note: Parallel dolly-train un-loading is not allowed for this procedure

14.4.5 Lateral guides on LL/LR Position

To avoid causing damage to the door frame, it is imperative the lateral guides aft of position LL/LR are always used during loading and un-loading of the aircraft. The only exception to this rule is when loading / un-loading16ft and 20ft pallets, in which case the lateral guides shall be lowered to allow free rotation of the pallets.

14.4.6 K-Loader (Hi-Lo) Side Loading requiring approach to aircraft.

The following procedures are mandatory when side loading Containers or Pallets:

a. A guide person shall be utilized at all times.
b. No more than two standard size dollies.

UNCONTROLLED DOCUMENT (25 NOVEMBER 2024 12:43:20)

UNCONTROLLED DOCUMENT

14.4.7 Intermediate Bulk Containers (IBCs)

Following general rules apply to IBCs when carrying liquids:

- **Special load code/remark/flagging 'IBC' shall be used. This is needed for load control purposes.**
- IBCs must be built of metal or hard plastic enclosed in a metal frame.
- IBCs are only allowed as a pallet load.
- Top loading is NOT permitted.
- The floor of the pallet must be covered with supporting platforms.
- Distribute IBCs evenly on the pallet.
- Volume max. 1000 liter per IBC.
- Use absorption sheets and plastic foil according to procedures.
- The fill lever per IBC must be a minimum of 80% and a maximum of 95%

Note that Dangerous Goods as liquids are **not** allowed on IBCs.

ULDs with IBCs are only allowed on the following positions:

  - Main Deck: E/ F/ G/ H/ J.
  - Lower Deck: 22P/ 23P/ 31P/ 32P.

- If IBCs are loaded the Max. Position Weight must be reduced by 20%.
- Max. 5 IBCs allowed per pallet.
- Max. Allowed Total Gross Weight of all pallets loaded with IBCs on the aircraft is 40 tons.
- All position locks must be serviceable.
- For ULDs with mixed load, the IBC restriction applies

14.4.8 Locks and Nets

Prior to departure all locks and nets must be raised / fastened in each hold including empty compartments.

UNCONTROLLED DOCUMENT

UNCONTROLLED DOCUMENT

UNCONTROLLED DOCUMENT (25 NOVEMBER 2024 12:43:20)

15. Rigid, Oversized and Special Loads

For guidance on the handling of special loads, please refer to the Special Loads Regional Contact Instructions outlined in Chapter 6 **6.12.22.3 - Determining Loadability of Special Loads**. Where direct operator approval is required, the Regional Airside Team will liaise with Global Airside as needed.

15.1 Floating / Heavy Pallets

Additional strapping requirements exist for any piece or pallet which requires restraint to be attached directly to the aircraft structure. The restrictions apply for floating pallets and pallets which need to be restrained to the aircraft structure due to the cargo net not being used as the primary restraint.

Any shipment which requires additional restraint shall be notified to the operator at least 24 hours in advance for approval.

The operator shall prepare a strapping plan which shall be implemented by the operators Load Master.

Single pieces weighing 10,000kg or more shall be notified to the operator no less than 24 hours in advance for prior approval.

Full details of the additional strapping requirements shall be found in ON-14-04.

Requests for approval shall be sent to: specialloads@kalittaair.com and to your Special Loads Regional Contact.

15.2 Heavy Pieces (HEA)

Loading of HEA (pieces exceeding a weight of 150kg) is not allowed in BL1.

15.3 Loading of Vehicles

DHL Wheel Cradle assemblies shall not be used as a primary means of restraint on this aircraft.

15.4 Piercing Cargo

Piercing cargo may not be loaded on the first and last loaded position on the aircraft.

15.5 Crushable Cargo Requirements

To protect the cargo barrier from potential damage, a number of Crushable Cargo ULDs suitable for protecting the barrier wall against unrestrained Rigid Cargo must be loaded in between the cargo barrier and the first Rigid / Piercing ULD. The number of Crushable Cargo ULDs suitable for protecting the barrier wall against unrestrained Rigid Cargo required depends on the total Main-deck load, as per the following charts.

Total MD weight	Number of Crushable Cargo ULDs suitable for protecting the barrier wall against unrestrained Rigid Cargo between the rigid cargo barrier and the first rigid/piercing ULD
Up to 82.000 kg **(180.800 lbs)**	2 in each lane
More than 82.000 kg **(180.800 lbs)**	3 in each lane

15.6 Gaps and Empty ULDs

Empty ULDs and gaps are allowed anywhere within or in front of rigid or piercing cargo. However, it cannot be classified as non-rigid (compressible) cargo.

UNCONTROLLED DOCUMENT (25 NOVEMBER 2024 12:43:20)

15.7 Flagging

Rigid and piercing cargo shall be flagged as follows:

RGD, e.g. BAHHUBCOYWPX**(RGD)**ORGCVG.

15.8 Aircraft Engines

The following aircraft engines are loadable on the B777 Freighter.

Engine Type	Loaded on	Allowed Loading Positions	Loading direction	Weight distribution for load control	
				Forward position	Aft position
BR710 BR715	96” Pallet	Main deck	Not important	100% on one position	
CF6-50	16ft Pallet	CDR – JKR CDL – GHL	Fan against flight direction	40%	60%
			Fan in flight direction	60%	40%
CF6-80C2	16ft Pallet	CDR – JKR CDL – GHL	Fan against flight direction	45%	55%
			Fan in flight direction	55%	45%
CFM56-2	96” Pallet	Main deck	Not important	100% on one position	
CFM56-3 CFM56-5 CFM56-7 V2500	16ft or 20ft Pallet	CDR – JKR CDL – GHL	Fan against flight direction	40%	60%
			Fan in flight direction	60%	40%
	As exception 96” pallet	Main deck Check height and observe overlap	Fan against flight direction	100% on one position	
GE90	20ft Pallet	CDR – JKR CDL – GHL EF, GH, JK (Centre)	Fan against flight direction	40%	60%
GE90-110/115B	20ft Pallet	EF, GH, JK (Centre)	Not important. Fan must be disassembled	50%	50%
JT3 JT8 complete	96” Pallet	Main deck	Not important	100% on one position	
JT3 JT8 Partially assembled (without thrust reverser)	96” Pallet	Main deck	Not important	100% on one position	
		Compartment 1, 2, 3, 4.	Load through the hold door with the exhaust (aft end) of the engine first	100% on one position	
JT9 PW4000	20ft Pallet	CDR – JKR CDL – GHL EF, GH, JK (Centre)	Not important	50%	50%
RB211	20ft Pallet	EF, GH, JK (Centre)	Fan against flight direction	40%	60%
Trent 700	20ft Pallet	EF, GH, JK (Centre)	Fan against flight direction	40%	60%

UNCONTROLLED DOCUMENT
UNCONTROLLED DOCUMENT

UNCONTROLLED DOCUMENT (25 NOVEMBER 2024 12:43:20)

UNCONTROLLED DOCUMENT

15.9 Live Animals

15.9.1 Horses

Max. Number of Horses per Aircraft	24 as standard. Up to 36 with prior approval, for approval contact your Special Loads Regional contact
Max. Number of Horses per Box	3
Max. number of Horses per Groom	9
Approved Horse Transport ULDs	DHL, CKS or IATA approved ULDs, i.e. HMJ or equivalent
Approved Loading Configurations	125”/96” Twin-track (Config 1) or 125”/96” centerline (Config 2)

Notes: Horses shall be loaded with their heads facing the direction of travel (forwards).

Grooms Exception: Polo Horses, Ponies etc. will be subject to further clarification from Kallita Air and the customer. For any exceptions, please contact your Special Loads Regional Contact.

15.9.2 Other Live Animals

The following table provides a list of commonly transported animals. If there is a requirement to transport animals not listed below, contact your Special Loads Regional Contact.

<table>
<tr><th></th><th>Main-Deck</th><th>Compt. 1</th><th>Compt. 2</th><th>Compt. 3</th><th>Compt. 4</th><th>Compt. BL1</th></tr>
<tr><td>Horses</td><td>Yes (max. 36 horses)</td><td colspan="4">No</td><td rowspan="16">No AVI allowed in BL1</td></tr>
<tr><td>Day-old chickens</td><td>Yes (max 5 pallets)</td><td rowspan="15">Yes</td><td rowspan="15">Yes</td><td rowspan="15">Yes</td><td rowspan="15">Yes</td></tr>
<tr><td>Monkeys</td><td rowspan="14">Yes</td></tr>
<tr><td>Pigs</td></tr>
<tr><td>Cattle</td></tr>
<tr><td>Sheep or Goats</td></tr>
<tr><td>Dogs or Cats</td></tr>
<tr><td>Small mammals or Birds</td></tr>
<tr><td>Tropical Fish</td></tr>
<tr><td>Reptiles or Amphibians</td></tr>
<tr><td>Eels</td></tr>
<tr><td>Crustaceans or Molluscs</td></tr>
<tr><td>Bees</td></tr>
<tr><td>Hatching eggs</td></tr>
</table>

UNCONTROLLED DOCUMENT (25 NOVEMBER 2024 12:43:20)

16. Restricted Commodities Loading

16.1 Radioactive (RRY), Magnetised (MAG) and Cargo Aircraft Only (CAO)

The following Dangerous Good type loading restrictions apply. The Dangerous Good type can be loaded on positions marked with a 'Y'. The Dangerous Good type cannot be loaded on positions marked with a 'N'.

	Position															
DG Type	A	B	C	D	E	F	G	H	J	K	L	M	P	R	FWD LD	AFT LD
MAG	Y	Y	Y	Y	Y	Y	Y	Y	Y	Y	Y	Y	Y	Y	Y	Y
CAO	Y	Y	Y	Y	Y	Y	Y	Y	Y	Y	Y	Y	Y	N	Y	Y
RRY (max. 100 TI combined)	N	N	N	Y	Y	Y	Y	Y	Y	Y	Y	Y	Y	Y	N	Y
RRY (max. 150 TI combined)	N	N	N	N	N	Y	Y	Y	Y	Y	Y	Y	Y	Y	N	Y
RRY (max. 200 TI combined)	N	N	N	N	N	N	N	Y	Y	Y	Y	Y	Y	Y	N	Y

Notes:

Cargo Aircraft Only (CAO) can be loaded on any Main Deck position A to P provided they are loaded accessible. Accessible means that:

- The CAO is loaded on a pallet
- Positions AL/AR are loaded with 88" ULDs or 96" pallets with 25cm (10") aisle
- Only 20 positions are accessible during flights with live animals
- Class 3 (PGIII, no sub-risk 8), 6.1, 6.2, 7 and 9 may be loaded within containers on the Main Deck. All remaining CAO shall be loaded in such a manner as to be visible and accessible to the crew.

MAG must not be loaded in the bulk compartment.

Load incompatibilities between AVI, HEG, LHO and FIL in the lower holds and RRY in the main deck:

If this special load …	**… Is loaded into lower-deck compartment …**	**… then max TI and allowed main-deck positions are …**		
		Max. 50.0 TI together on positions	Max. 100.0 TI together on positions	Max. 200.0 TI together on positions
AVI, HEG, LHO	**1**	F-R	F-R	H-R
	2	H-R	J-R	K-R
	3	D-G and R	D-F	**Not allowed**
	4	D-J	D-J	H
FIL	**1**	G-R	H-R	L-R
	2	J-R	L-R	R
	3	D-F	D	**Not allowed**
	4	D-H	D-G	**Not allowed**

UNCONTROLLED DOCUMENT (25 NOVEMBER 2024 12:43:20)

Load incompatibilities between RRY in the lower holds and AVI, HEG, LHO, FIL in the main deck:

If this RRY …	… is loaded into lower-deck compartment …	… then the following main-deck positions are allowed for …	
		AVI, HEG, LHO	FIL
Max 50.0 TI	**3**	A-G	A-F
	4	A-J	A-H
Max 100.0 TI	**3**	A-F	A-D
	4	A-J	A-G
Max 150.0 TI	**3**	A-E	A
	4	A-H	A-E

16.2 Dry Ice

Refer to Global Supplementary Operational Document **Dry Ice Consolidation table** for the current Dry Ice limits.

Higher sublimation rates will affect the maximum limits. For higher sublimation rates, please refer to section 20 DRY ICE reference tables in this document.

Dry Ice (ICE) and Live Animals (AVI)

There is no weight limit for the loading of Dry Ice (ICE) together with Live Animals (AVI) on the Main-deck of the B777 Freighter.

A maximum of 200 kg (440 lbs) of ICE per lower-deck hold may be carried together with AVI.

UNCONTROLLED DOCUMENT
UNCONTROLLED DOCUMENT

UNCONTROLLED DOCUMENT (25 NOVEMBER 2024 12:43:20)

UNCONTROLLED DOCUMENT

17. Messaging and Reporting

17.1 Messaging

Standard messaging rules apply.

17.2 Reporting

Standard messaging rules apply.

UNCONTROLLED DOCUMENT

UNCONTROLLED DOCUMENT

UNCONTROLLED DOCUMENT (25 NOVEMBER 2024 12:43:20)

UNCONTROLLED DOCUMENT

18. Load Control Data

18.1 Standard Mass Additions

18.1.1 Additional Crew Members (ACM)

Maximum Number of ACMs:	6
Mass of ACM:	231 lbs (Does not include baggage. See Note)

Note: 38 lbs of baggage shall be allocated in the bulk compartment for each ACM on board (38 * Number of ACM). The Flight Crew's (Captain and FO) baggage is included in the DOW.

18.1.2 Fly Away Kit (FAK) and Ballast

Fly Away Kit (FAK):	The FAK is not included in the DOW/DOI. FAK weights are communicated by Kalitta with Load Control prior to each flight.
Ballast:	N/A

18.2 Minimum Fuel and Standard Taxi Fuel

Minimum Fuel:	Not defined
Standard Taxi Fuel:	2000 lbs

18.3 LMC Restrictions

Maximum Fuel LMC:	+/- 1000 lbs
Maximum Payload LMC:	+/- 1000 lbs

18.4 Aircraft take-off weight conditions

	Flight Plan Changes Required?	
	Amend	Reissue
A difference exists between the actual takeoff weight and the flight plan takeoff weight up to +/-10,000 Lbs.	No	No
Actual takeoff weight exceeds the flight plan takeoff weight by more than 10,000 Lbs.	No	Yes
Actual takeoff weight is less than the flight plan takeoff weight by more than -10,000 Lbs.	Yes	No

Note: Be aware that while exceeding the 10,000 Lbs. threshold will result in the computation of new fuel requirements, including fuel burn and total ramp fuel, the Captain MAY request to have a new Flight Release prepared at any time that they feel the need to do so, regardless of actual weight difference.

UNCONTROLLED DOCUMENT (25 NOVEMBER 2024 12:43:20)

19. Maximum Package Dimensions

19.1 Main Cargo Door (in.)

MAIN DECK COMPARTMENT ALLOWABLE PACKAGE SIZES - SIDE CARGO DOOR														
HEIGHT IN.	WIDTH IN.													
	10	20	30	40	50	60	70	80	90	100	110	120	130	140
	LENGTH IN.													
120	319	286	260	239	220	205	191	173	149	100	100	100	100	100
118	335	300	271	249	229	212	199	182	161	131	106	106	106	106
116	353	314	284	259	238	221	206	191	171	145	111	111	111	111
114	388	330	296	270	248	229	214	199	181	157	125	117	117	117
112	393	346	310	281	257	238	221	207	189	168	140	123	123	123
110	415	364	325	293	268	247	229	214	198	177	152	129	129	129
108	439	383	340	306	279	256	237	221	206	186	162	135	135	135
106	456	408	352	316	288	265	246	229	213	195	172	143	140	140
104	484	376	369	330	300	275	254	236	221	203	181	153	146	146
102	513	440	386	345	312	285	263	242	228	211	189	163	152	152
100	561	474	412	364	327	297	271	252	235	218	198	172	158	158
98	580	490	424	375	337	306	281	260	242	225	205	180	163	163
0-85.5	839	666	553	474	415	370	333	304	281	259	241	219	192	192

Note: Maximum length for a Main-deck piece is 493 inches

UNCONTROLLED DOCUMENT
UNCONTROLLED DOCUMENT

UNCONTROLLED DOCUMENT (25 NOVEMBER 2024 12:43:20)

UNCONTROLLED DOCUMENT

UNCONTROLLED DOCUMENT

19.2 Main Cargo Door (cm.)

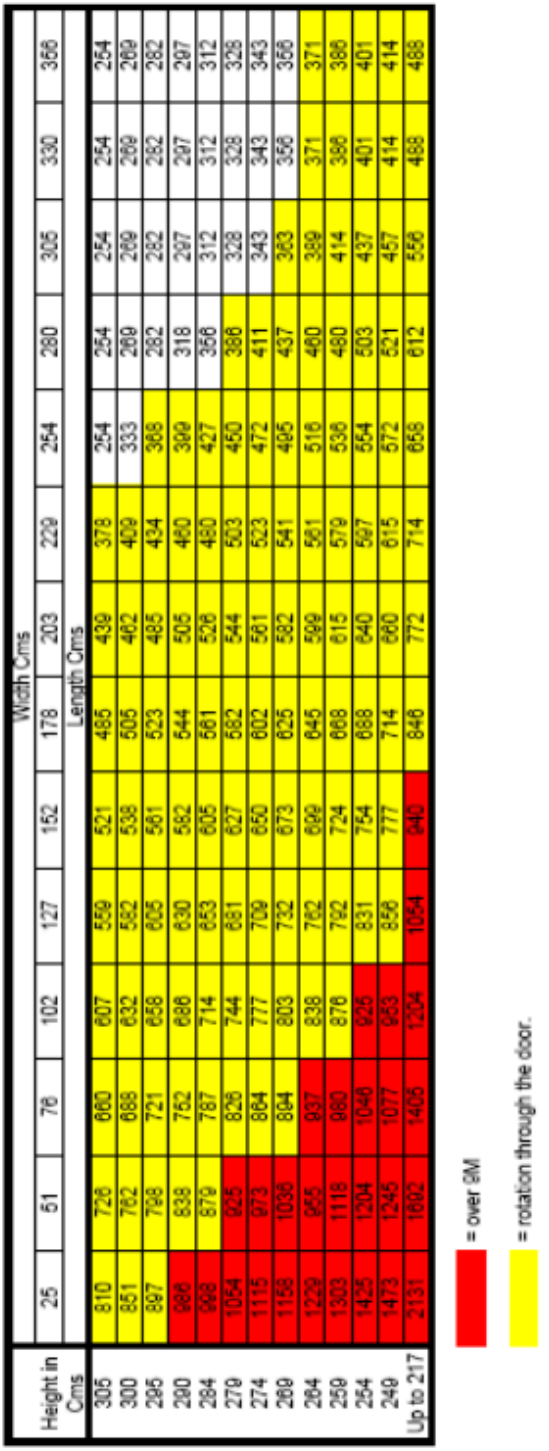

Note: Maximum length for a main-deck piece is 1000cm

UNCONTROLLED DOCUMENT (25 NOVEMBER 2024 12:43:20)

UNCONTROLLED DOCUMENT

19.3 Forward LD Cargo Door

FORWARD COMPARTMENT ALLOWABLE PACKAGE SIZES										
HEIGHT IN.	WIDTH IN.									
	10	20	30	40	50	60	70	80	90	101.9
	LENGTH IN.									
64	293	273	253	233	213	193	172	152	130	
60	312	291	271	251	231	211	190	170	149	133
55	328	308	288	268	247	227	206	185	164	146
50	343	323	302	282	262	241	220	199	177	157
45	347	327	306	286	265	245	224	203	181	160
40	347	327	306	286	265	245	224	203	181	160
35	347	327	306	286	265	245	224	203	181	160
30	347	327	306	286	265	245	224	203	181	160
25	347	327	306	286	265	245	224	203	181	160
20	347	327	306	286	265	245	224	203	181	160
15	347	327	306	286	265	245	224	203	181	160
10	347	327	306	286	265	245	224	203	181	160
5	347	327	306	286	265	245	224	203	181	160

19.4 Aft LD Cargo Door

AFT COMPARTMENT ALLOWABLE PACKAGE SIZES										
HEIGHT IN.	WIDTH IN.									
	10	20	30	40	50	60	70	80	90	101.9
	LENGTH IN.									
64	293	273	253	233	213	193	172	152	130	
60	312	291	271	251	231	211	190	170	149	133
55	328	308	288	268	247	227	206	185	164	146
50	343	323	302	282	262	241	220	199	177	157
45	347	327	306	286	265	245	224	203	181	160
40	347	327	306	286	265	245	224	203	181	160
35	347	327	306	286	265	245	224	203	181	160
30	347	327	306	286	265	245	224	203	181	160
25	347	327	306	286	265	245	224	203	181	160
20	347	327	306	286	265	245	224	203	181	160
15	347	327	306	286	265	245	224	203	181	160
10	347	327	306	286	265	245	224	203	181	160
5	347	327	306	286	265	245	224	203	181	160

UNCONTROLLED DOCUMENT

UNCONTROLLED DOCUMENT (25 NOVEMBER 2024 12:43:20)

19.5 Bulk Cargo Door

BULK COMPARTMENT ALLOWABLE PACKAGE SIZES						
HEIGHT IN.	WIDTH IN.					
	5	10	15	20	25	33.2
	LENGTH IN.					
40	169	169	154	142	133	123
36	169	169	161	147	137	128
32	169	169	169	154	143	133
28	169	169	169	162	150	137
24	169	169	169	162	150	137
20	169	169	169	162	150	137
16	169	169	169	162	150	137
12	169	169	169	162	150	137
8	169	169	169	162	150	137
4	169	169	169	162	150	137

Note: To convert from inches to centimetres, multiply by 2.54

UNCONTROLLED DOCUMENT
UNCONTROLLED DOCUMENT

UNCONTROLLED DOCUMENT (25 NOVEMBER 2024 12:43:20)

UNCONTROLLED DOCUMENT

20. Contour Drawings

20.1 JI Contour

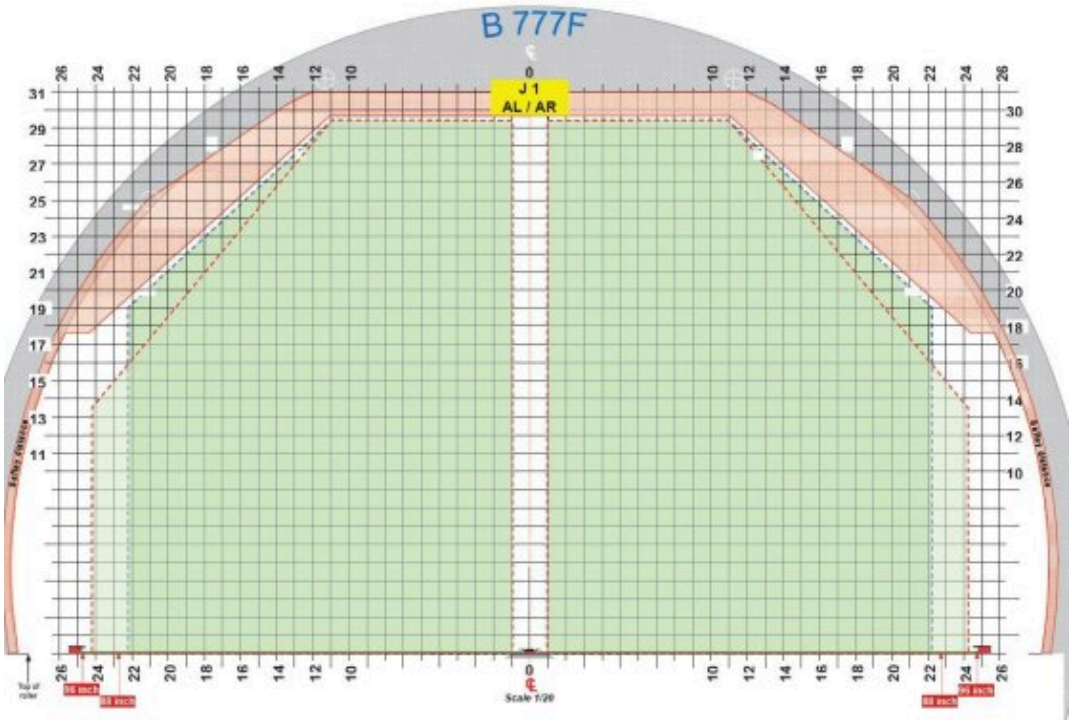

20.2 JIII Contour

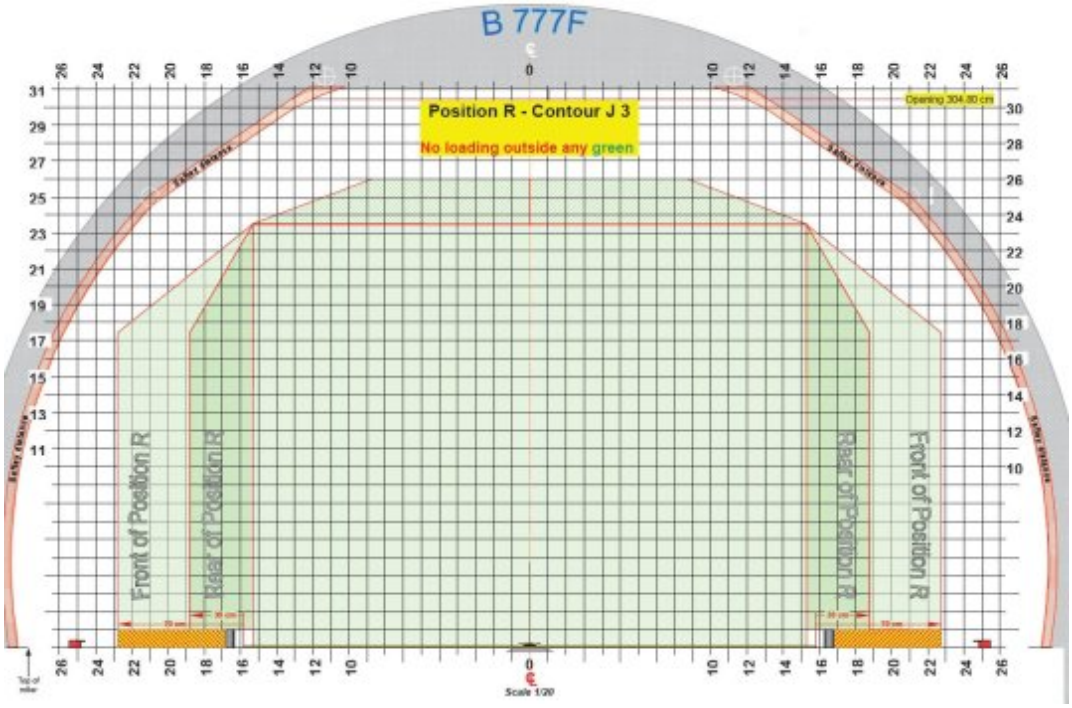

UNCONTROLLED DOCUMENT

UNCONTROLLED DOCUMENT (25 NOVEMBER 2024 12:43:20)

20.3 JIV Contour

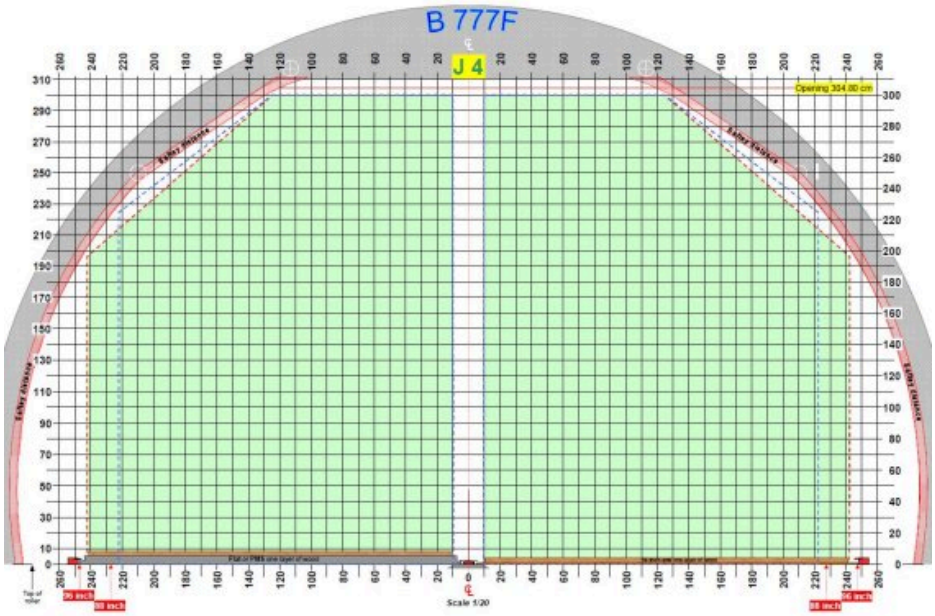

UNCONTROLLED DOCUMENT
UNCONTROLLED DOCUMENT

UNCONTROLLED DOCUMENT (25 NOVEMBER 2024 12:43:20)

21. Dry ice reference tables

B-777F TABLE 1 Operating Mode Definitions (Two Pack Normal Operation)			
Lower Lobe Selection			
Operating Model	FCAC Setting	ACAC Setting	Main Deck Setting
1	OFF	OFF	NORM
2	AUTO	OFF	NORM
3	OFF	AUTO	NORM
4	AUTO	AUTO	NORM
5	AUTO	AUTO	HIGH
6	OFF	OFF	HIGH
7	AUTO	OFF	HIGH
8	OFF	AUTO	HIGH

B-777F TABLE 2: TOTAL ALL COMPARTMENTS						
MAX WEIGHT	OPERATING MODE (SEE B-777F TABLE 1	SUBLIMATION RATE %				
		1	2	3	4	5
LBS	1 and 6	5400	2800	1850	1400	1100
KGS		2449	1270	839	635	499
LBS	2 and 3	9000	4500	3000	2250	1850
KGS		4082	2041	1361	1021	839
LBS	7 and 8	10200	5000	3400	2600	2000
KGS		4627	2268	1542	1179	907
LBS	4 and 5	12600	6350	4200	3150	2500
KGS		5715	2880	1905	1429	1134

B-777F TABLE 3: LOWER LOBES NOTE: TOTAL SHOULD BE SUBTRACTED FROM MAXIMUM AIRPLANE CAPABILITY						
MAX WEIGHT	OPERATING MODE (SEE B-777F TABLE 1	SUBLIMATION RATE %				
		1	2	3	4	5
LBS	2 and 7	2,050	1,000	690	510	400
KGS		930	454	313	231	181
LBS	2, 3, 4 and 8	2,400	1,200	800	600	480
KGS		1,088	544	363	272	218

UNCONTROLLED DOCUMENT (25 NOVEMBER 2024 12:43:20)