UNCONTROLLED DOCUMENT

UNCONTROLLED DOCUMENT

MNB A306F
MNG Cargo A300-600F

Revision: 5
Date: 28 November 2024

1 MNG Cargo A300-600F Registrations
2 Aircraft Dimensions
3 Aircraft Servicing Points and Specifications
4 Ground Support Equipment
5 Standard Turnaround Times
6 Safety Areas
7 Strong Wind Conditions
8 Aircraft Door Dimensions
9 Compartment Classification and Air-Conditioning
10 Aircraft Cabin Contour Dimensions
11 Maximum Position Weights
12 Aircraft ULD Compatibility
13 Loading and Un-Loading
14 Rigid, Oversized and Special Loads
15 Restricted Commodities Loading
16 Messaging and Reporting
17 Load Control Data
18 Maximum Package Dimensions

UNCONTROLLED DOCUMENT (28 NOVEMBER 2024 16:00:14)

Page	Date	Comment
23	28 November 2024	ULD type AAZ removed. *(Minor)*

UNCONTROLLED DOCUMENT

UNCONTROLLED DOCUMENT

1. MNG Cargo A300-600F Registrations

IATA Designator:	**MG**
ICAO Designator:	**MNB**
Valid for:	**TCMNV, TCMCC, TCMCG, TCMCE, 4LUCK**

Note: Aircraft contained within this entry have been converted by different companies and may have different characteristics. Where differences occur, the applicable aircraft registrations will be displayed at the top of the sub-chapter header.

UNCONTROLLED DOCUMENT
UNCONTROLLED DOCUMENT

2. Aircraft Dimensions

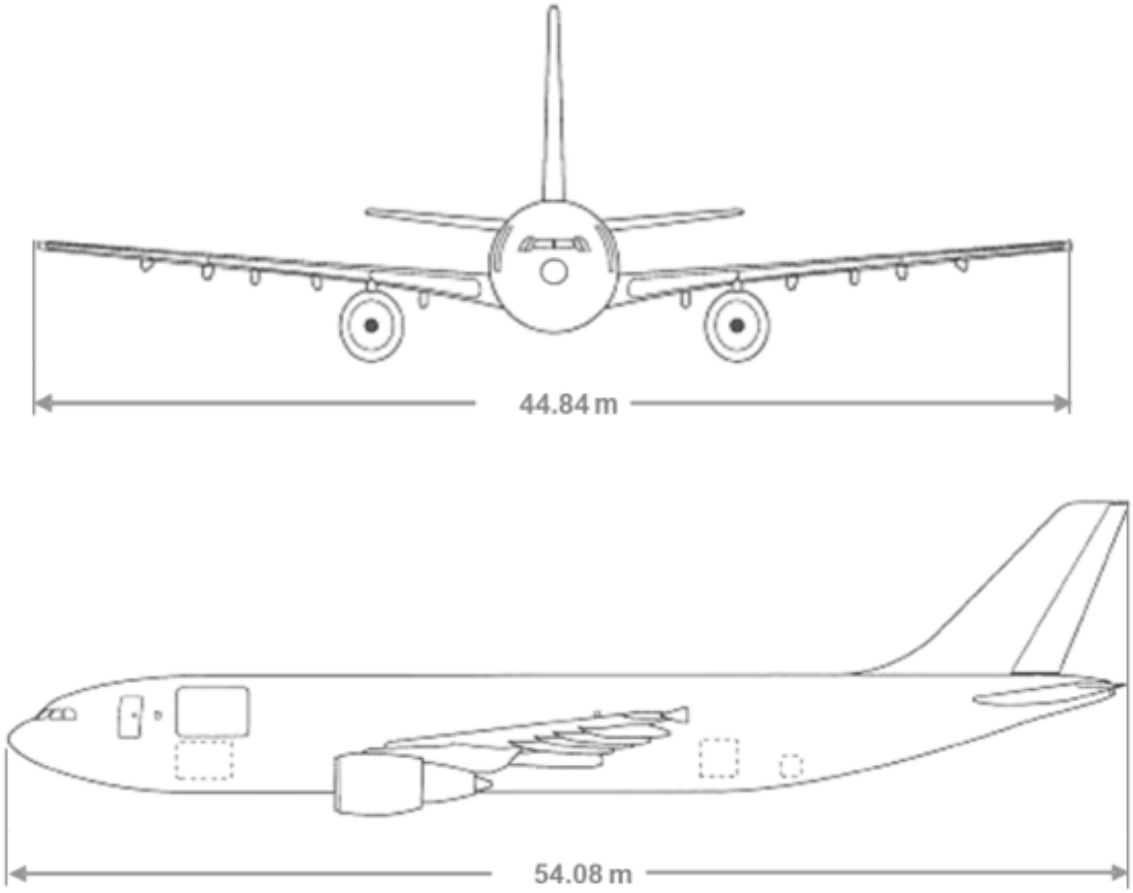

UNCONTROLLED DOCUMENT
UNCONTROLLED DOCUMENT

UNCONTROLLED DOCUMENT

3. Aircraft Servicing Points and Specifications

3.1 Servicing Points

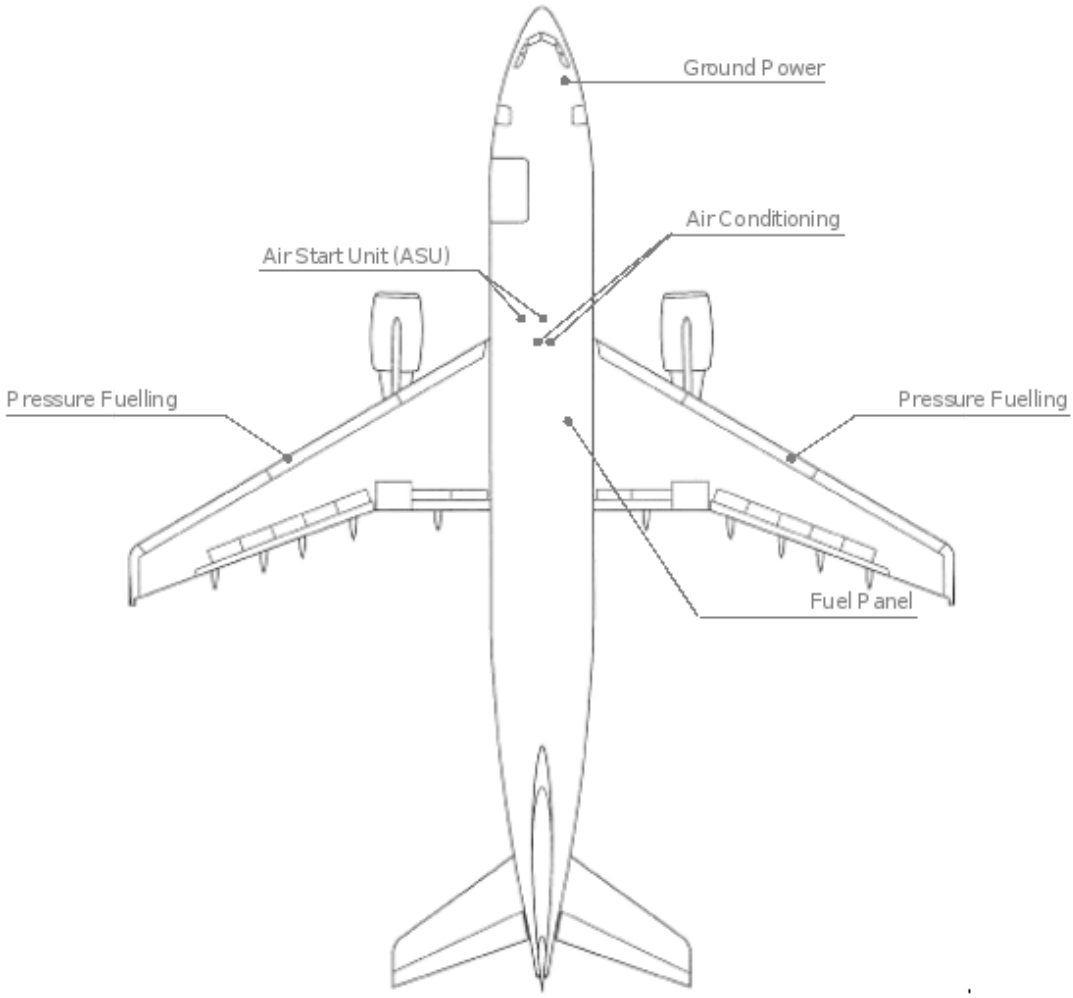

3.2 Servicing Specifications

System	Requirements	Notes
Ground Power Unit	115/200V AC / 90 kVA / 400 Hz	
Fuel	Jet A1	Fuel Control Panel on LH Wing Only
Air Condition Unit	Maximum Flow Rate - depends on ambient air temperature	2 ACU inlets available
Air Start Unit	Minimum Capacity and Max. / Min. pressure - depends on ambient air temperature	2 ASU inlets available. 2 ASUs may be required, depending on flow rate and ambient air temperature.

UNCONTROLLED DOCUMENT (28 NOVEMBER 2024 16:00:14)

4. Ground Support Equipment

4.1 Positioning of GSE

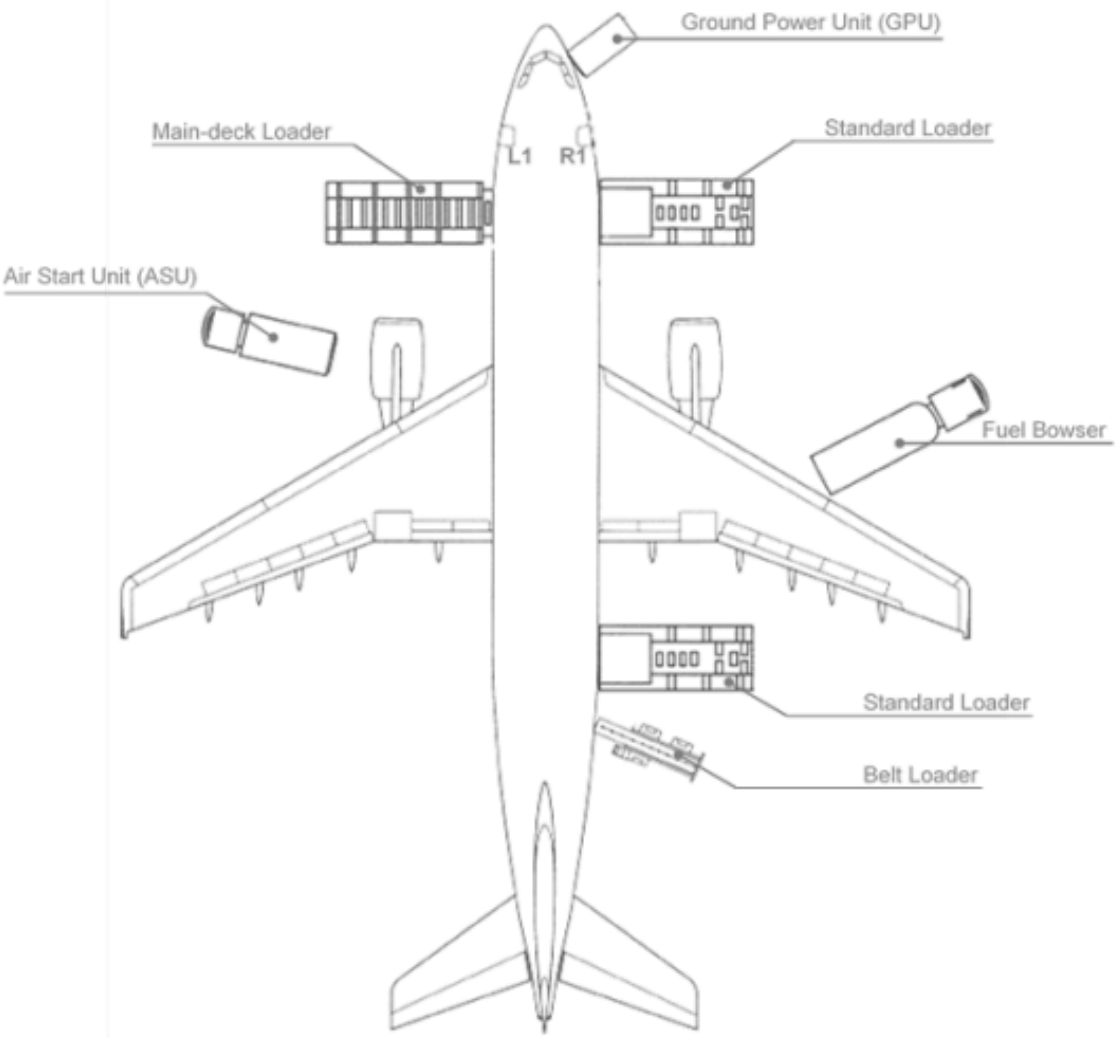

4.2 GSE Requirements

GSE	Type	Quantity
High Loader	Main-deck Standard	1 2
Crew stairs*	Platform height 4.41 – 4.58 meter	1
Ground Power Unit	Diesel, Electric or Ground-powered	1
Belt Loader	Standard (9 meter recommended)	1
Tractor	N/A	6
Dolly Wagon Main-deck	125”/88” and 125”/96” capable	Up to 21
Dolly Wagon Lower-deck	125”/88” capable	Up to 7
	60.4”/61.5” or 60.4/125” capable	Up to 14
Belly Container / Wagon	As required	According to load

UNCONTROLLED DOCUMENT
UNCONTROLLED DOCUMENT

UNCONTROLLED DOCUMENT (28 NOVEMBER 2024 16:00:14)

5. Standard Turnaround Times

Turn-around time for a transit stop:	01:20 hour (partial off- and on-load)
Turn-around time for an end stop:	01:35 hour (full off- and on-load)

UNCONTROLLED DOCUMENT
UNCONTROLLED DOCUMENT

UNCONTROLLED DOCUMENT

6. Safety Areas

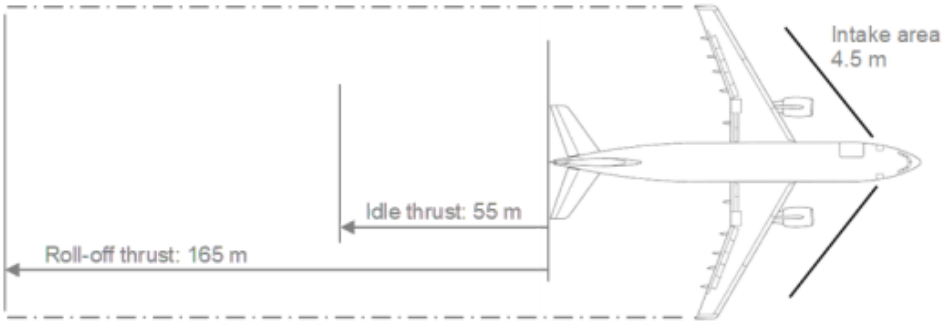

UNCONTROLLED DOCUMENT

UNCONTROLLED DOCUMENT

UNCONTROLLED DOCUMENT (28 NOVEMBER 2024 16:00:14)

UNCONTROLLED DOCUMENT

7. Strong Wind Conditions

If the wind conditions on the ramp reach the following speeds, the corresponding actions shall be taken.

Wind Speed	Action
Up to 40 knots	Normal Operations: All doors can be opened and left open
More than 40 knots	Do not open additional doors
More than 40 knots	All open doors shall be closed immediately

UNCONTROLLED DOCUMENT

UNCONTROLLED DOCUMENT

UNCONTROLLED DOCUMENT (28 NOVEMBER 2024 16:00:14)

UNCONTROLLED DOCUMENT

8. Aircraft Door Dimensions

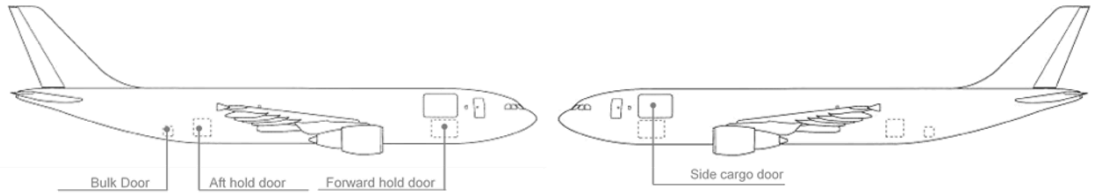

Door width, height, and sill height are defined as follows.

(This drawing is for illustration purposes only and may not be an exact representation of this aircraft type)

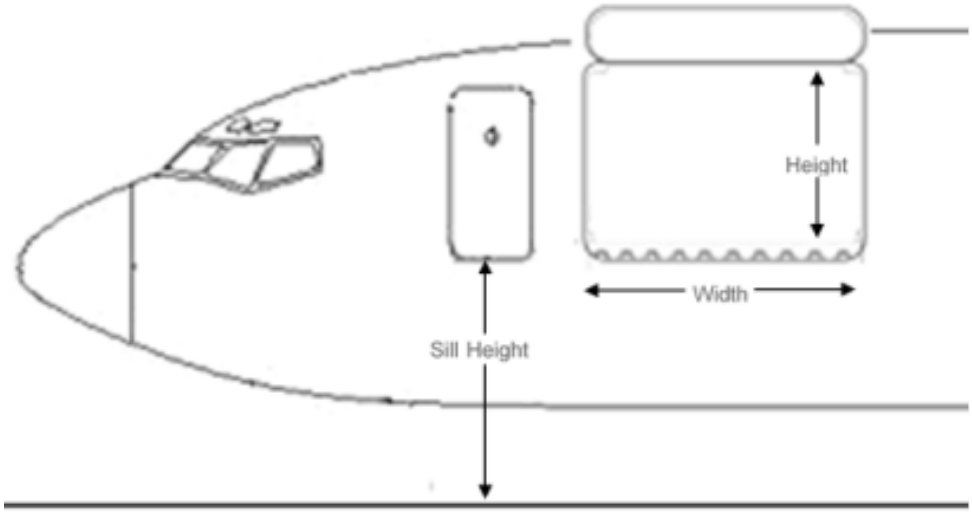

All dimensions are in centimetres (cm).

Valid for registrations: **TCMNV, TCMCE, 4LUCK**

Door	Door Width	Door Height	Min. Door Sill Height	Max. Door Sill Height
Crew Door	-	-	441	458
Side Cargo Door	358	256	437	448
Forward Hold	270	170*	249	265
Aft Hold	181	168*	298	318
Bulk Hold	95	64	304	326

* Maximum height for a Lower-deck ULD is 163 cm (64 inches)

Valid for registrations: **TCMCC, TCMCG**

Door	Door Width	Door Height	Min. Door Sill Height	Max. Door Sill Height
Crew Door	-	-	441	458
Side Cargo Door	358	251	437	448
Forward Hold	270	170*	249	265
Aft Hold	281	168*	298	318
Bulk Hold	95	64	304	326

* Maximum height for a Lower-deck ULD is 163 cm (64 inches)

UNCONTROLLED DOCUMENT (28 NOVEMBER 2024 16:00:14)

UNCONTROLLED DOCUMENT

9. Compartment Classification and Air-Conditioning

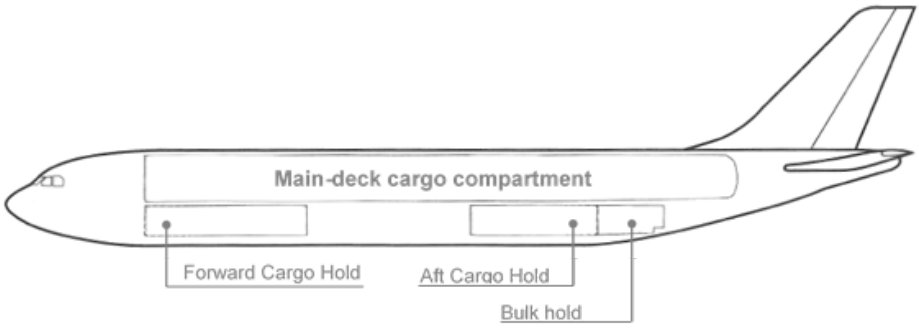

9.1 Compartment Classification

Compartment		Features
Main-deck	Position AL loaded with 88" ULD **with** 50cm (18") isle	- Classification E
		- Pressurisation
		- Smoke Detection
		- **Accessible** during flight
	Position AL loaded with 88" ULD **without** 50 cm (18") aisle	- Classification B
		- Pressurisation
		- Smoke Detection
		- **In-accessible** during flight
Lower-deck All Compartments		- Classification **C**
		- Pressurisation
		- Smoke Detection
		- Fire Suppression
		- **In-accessible** during flight

9.2 Air-Conditioning

	Main-deck	Forward Hold	Aft Hold	Bulk
Temperature	7C to 29C	NO		5C to 25C
Heating	Yes	NO		Yes
Heat adjust	Yes	NO		Automatic with Main-deck
Cooling	Yes	NO		Yes
Ventilation	Yes	NO		Yes

UNCONTROLLED DOCUMENT (28 NOVEMBER 2024 16:00:14)

10. Aircraft Cabin Contour Dimensions

The aircraft is divided into three contour zones: I, II and III.

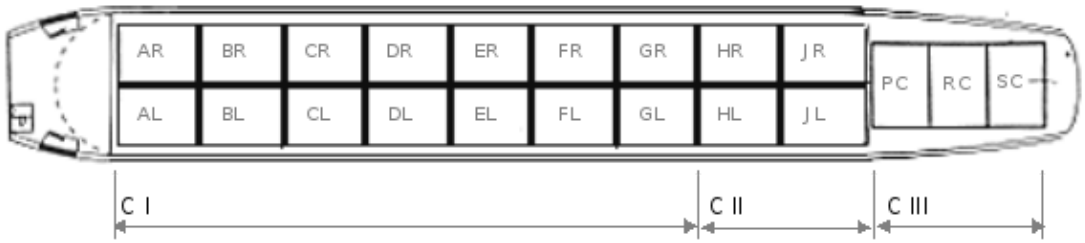

As an example, this drawing illustrates a cross-section of contour zone I.

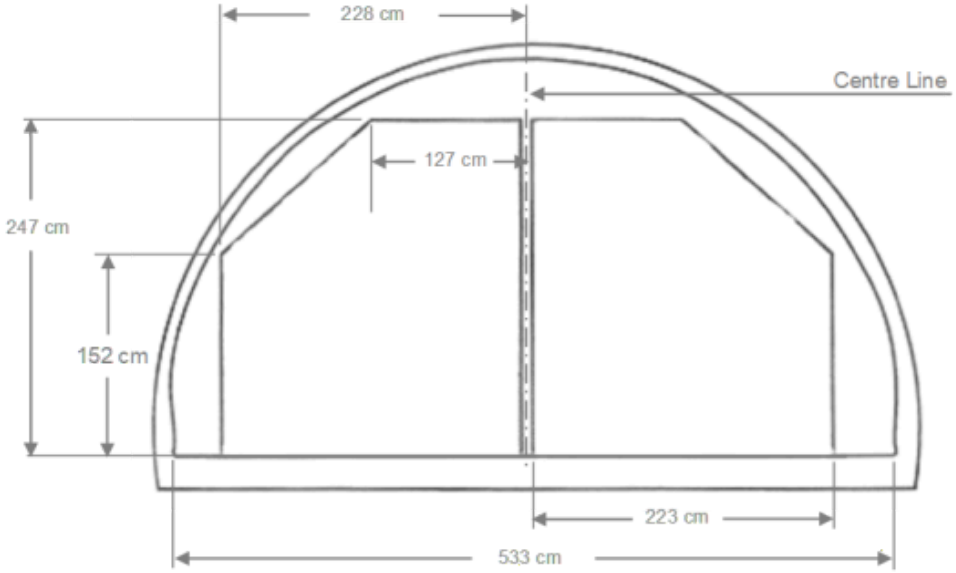

Note: All heights are given from top of rollers.

UNCONTROLLED DOCUMENT
UNCONTROLLED DOCUMENT

UNCONTROLLED DOCUMENT (28 NOVEMBER 2024 16:00:14)

UNCONTROLLED DOCUMENT

10.1 Contour I

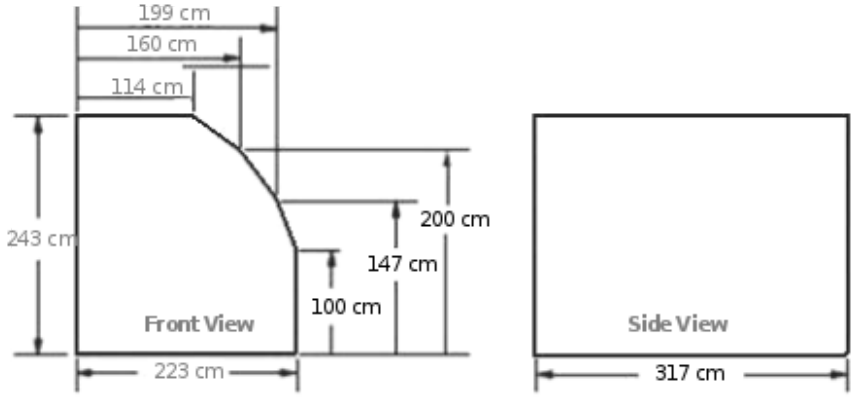

10.2 Contour II

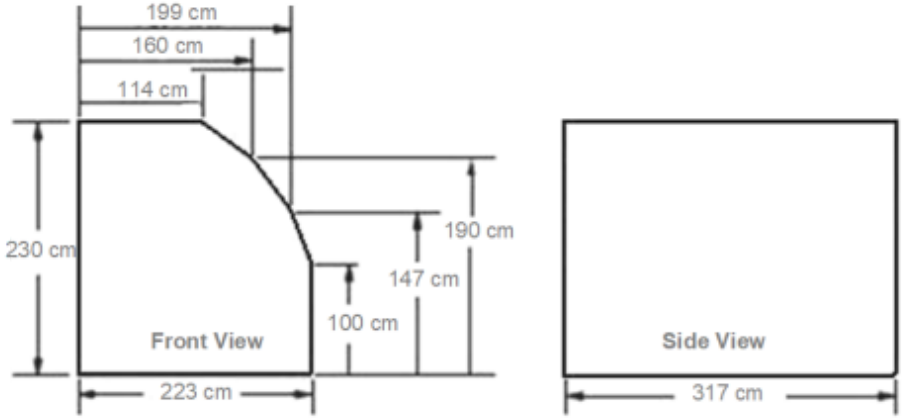

10.3 Contour III

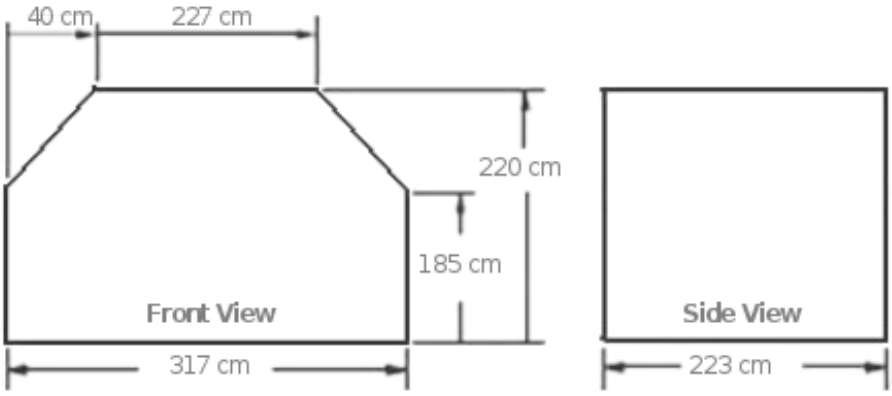

UNCONTROLLED DOCUMENT (28 NOVEMBER 2024 16:00:14)

UNCONTROLLED DOCUMENT

10.4 Centreline 125”/88” or 125”/96” Contours

Lateral 125”/88” (A thru K) or 125”/96” (A thru J)

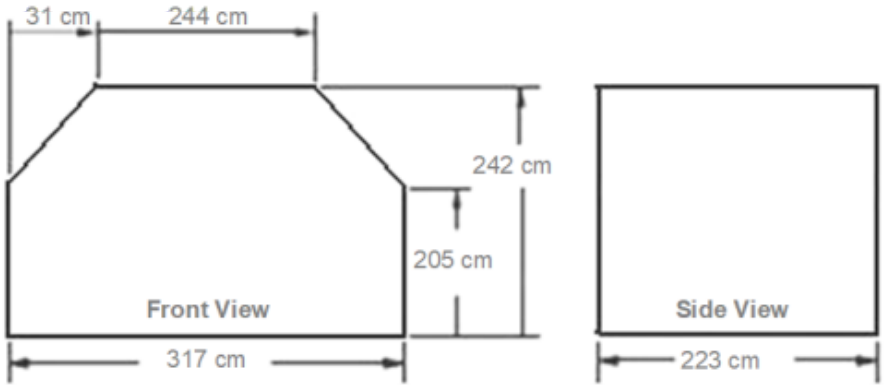

Lateral 125”/88” (L thru P) or 125”/96” (K thru M)

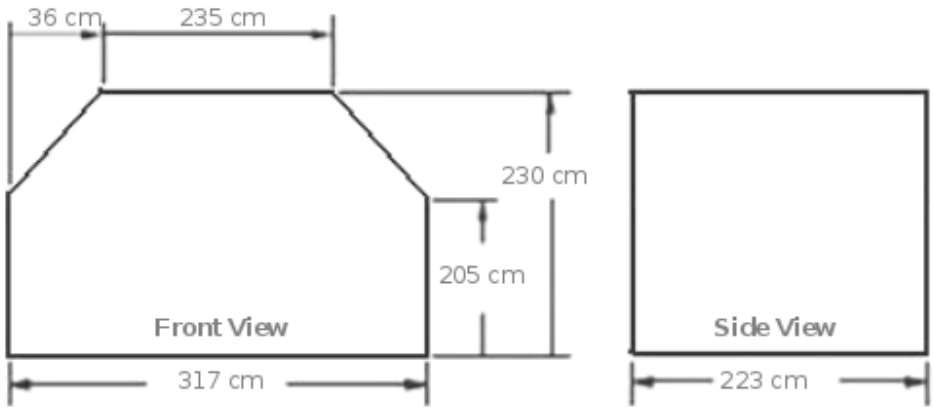

Longitudinal 125”/96” (AB thru JK):

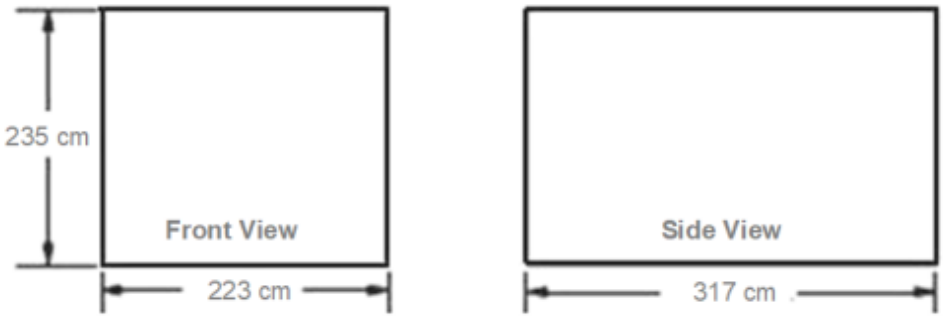

Note: AMJ loadable with sloped side facing left (towards door)

UNCONTROLLED DOCUMENT (28 NOVEMBER 2024 16:00:14)

UNCONTROLLED DOCUMENT

11. Maximum Position Weights

11.1 Maximum Main-deck ULD Weights in Kilograms

Valid for registrations: **TCMNV**

ULD Config.	ULD Position														
88" Twin.	**AL/R**	**BL/R**	**CL/R**	**DL/R**	**EL/R**	**FL/R**	**GL/R**	**HL/R**	**JL/R**						
Kgs	2000	2358	2537	4321			3164	2400	2090						
Lbs	4409	5197	5593	9526			6975	5292	4607						
88" Lat.	**A**	**B**	**C**	**D**	**E**	**F**	**G**	**H**	**J**	**K**	**L**	**M**	**P**	**R**	**S**
Kgs	2826	3070	3391		5707	6033				3360		3219	2826		2313
Lbs	6230	6768	7476		12582	13300				7408		7097	6230		5099
96" Lat.	**AA**	**BB**	**CC**	**DD**	**EE**	**FF**	**GG**	**HH**	**JJ**	**KK**	**LL**	**MM**	**PP**	**RR**	
Kgs	3080	3426	3696	4274	5670				4082	3660	3335	3080		2313	
Lbs	6790	7553	8148	9423	12500				8999	8069	7352	6790		5099	
96" Long.	**AB**	**BC**	**CE**	**EF**	**FG**	**GH**	**HJ**								
Kgs	4001		4330	4281	6804		4800								
Lbs	8821		9546	9438	15000		1582								

Valid for registrations: **TCMCE, 4LUCK**

ULD Config.	ULD Position														
88" Twin	**AB L/R**	**BC L/R**	**CE L/R**	**EF L/R**	**FH L/R**	**HJ L/R**	**JK L/R**	**KM L/R**	**MP L/R**	**PR**	**RS**	**ST**			
Kgs	2000	2358	2537	4321			3181	2400	2090	2826		2429			
Lbs	4410	5197	5593	9526			7013	5292	4607	6230		5354			
96" Twin	**AB L/R**	**BC L/R**	**CE L/R**	**EF L/R**	**FH L/R**	**HJ L/R**	**JK L/R**	**KM L/R**							
Kgs	2000	2358	2537	4321			3181	2400							
Lbs	4410	5197	5593	9526			7013	5292							
96" Long.	**AB**	**BC**	**CE**	**EF**	**FH**	**HJ**	**JK**								
Kgs	4001		4331	4281	6804		4800								
Lbs	8820		9548	9438	15000		10582								
88" Lat.	**A**	**B**	**C**	**D**	**E**	**F**	**G**	**H**	**J**	**K**	**L**	**M**	**P**	**R**	**S**
Kgs	2826	3070	3391		5707	6033				3581	3391	3189	2826		2728
Lbs	6230	6769	7476		12581	13300				7894	7476	7030	6230		6014
96" Lat.	**AA**	**BB**	**CC**	**DD**	**EE**	**FF**	**GG**	**HH**	**JJ**	**KK**	**LL**	**MM**	**PP**	**RR**	
Kgs	3080	3426	3696	4274	5670				4648	3696	3259	3080		2705	
Lbs	6790	7553	8148	9422	12500				10246	8148	7184	6790		5964	

UNCONTROLLED DOCUMENT (28 NOVEMBER 2024 16:00:14)

Valid for registrations: **TCMCC, TCMCG**

ULD Config.	ZFW (1000Kg)	ULD Position											
		A1L/R	A2L/R	A3L/R	A4L/R	A5L/R	A6L/R	A7L/R	A8L/R	A9L/R	A10C	A11C	A12C
18 longitudinal twin track and 3 Lateral centreline 125/88" positions	80 to 90	1636	1642	1977	3569	3495	3392	1817	1749	1353	1822	1753	1499
	90 to 100	1771	1778	2138	3848	3768	3658	1967	1896	1470	1970	1897	1595
	100 to 110	1906	1914	2298	4127	4042	3924	2117	2043	1588	2119	2041	1690
	110 to 120	1984	1984	2381	4286	4286	4190	2267	2189	1705	2267	2185	1786
	120 to 130	1984	1984	2381	4286	4286	4286	2381	2336	1823	2416	2329	1881

ULD Config.	ZFW (1000Kg)	ULD Position											
		B1L/R	B2L/R	B3L/R	B4L/R	B5L/R	B6L/R	B7L/R	B8L/R	B9C	B10C	B11C	B12C
16 Longitudinal twin-track and 4 Lateral centreline 125/96" positions	80 to 90	1636	1642	1977	3569	3495	3392	1817	1748	2141	2015	1918	1424
	90 to 100	1771	1778	2138	3848	3768	3658	1967	1895	2315	2179	2075	1546
	100 to 110	1906	1914	2298	4127	4042	3924	2117	2042	2489	2343	2232	1668
	110 to 120	1984	1984	2381	4286	4286	4190	2267	2189	2664	2506	2388	1791
	120 to 130	1984	1984	2381	4286	4286	4286	2381	2336	2838	2670	2545	1913

ULD Config.	ZFW (1000Kg)	ULD Position											
		C1C	C2C	C3C	C4C	C5C	C6C	C7C	C8C	C9C	C10C	C11C	C12C
8 Longitudinal single-track 125/96" and 4 Lateral centreline 125/96" positions	80 to 90	3301	3314	3983	5492	5380	5224	3675	3543	2141	2015	1918	1424
	90 to 100	3560	3574	4293	5914	5794	5626	3965	3826	2315	2179	2075	1546
	100 to 110	3820	3835	4603	6336	6207	6029	4254	4110	2489	2343	2232	1668
	110 to 120	3969	3969	4763	6577	6577	6431	4544	4393	2664	2506	2388	1791
	120 to 130	3969	3969	4763	6577	6577	6577	4763	4677	2838	2670	2545	1913

UNCONTROLLED DOCUMENT

UNCONTROLLED DOCUMENT

ULD Config.	ZFW (1000Kg)	ULD Position														
		D1C	D2C	D3C	D4C	D5C	D6C	D7C	D8C	D9C	D10C	D11C	D12C	D13C	D14C	D15C
15 Lateral single-track 125/88" positions	80 to 90	2322	2330	2805	2804	2798	5011	4934	4837	4724	2577	2504	2000	1822	1753	1499
	90 to 100	2504	2513	3023	3022	3016	5393	5311	5206	5086	2781	2704	2163	1970	1897	1595
	100 to 110	2687	2696	3242	3241	3233	5776	5688	5576	5448	2984	2904	2325	2119	2041	1690
	110 to 120	2794	2794	3353	3353	3353	6036	6036	5945	5810	3188	3104	2488	2267	2185	1786
	120 to 130	2794	2794	3353	3353	3353	6036	6036	6036	6036	3353	3304	2650	2416	2329	1881

ULD Config.	ZFW (1000Kg)	ULD Position													
		E1C	E2C	E3C	E4C	E5C	E6C	E7C	E8C	E9C	E10C	E11C	E12C	E13C	E14C
14 Lateral single-track 125/96" positions	80 to 90	2534	2542	3061	3058	5505	5425	5325	5188	2820	2728	2141	2015	1918	1424
	90 to 100	2733	2742	3299	3296	5925	5839	5731	5585	3042	2946	2315	2179	2075	1546
	100 to 110	2932	2941	3537	3534	6345	6253	6138	5981	3265	3164	2489	2343	2232	1668
	110 to 120	3048	3048	3658	3658	6584	6584	6544	6378	3487	3382	2664	2506	2388	1791
	120 to 130	3048	3048	3658	3658	6584	6584	6584	6584	3658	3600	2838	2670	2545	1913

11.2 Maximum Lower-deck Compartment Weights in Kilograms

11.2.1 Forward Hold

Position	Max. Gross Weight per ULD (in kilograms)			
	88"/125"	96"/125"	60.4"/125" (ALP)	60.4"/61.5" (AKE)
11P-21P	4626	4626		
11-23 L/R			3175	1587

11.2.2 Aft Hold

Position	Max. Gross Weight per ULD (in kilograms)			
	88"/125"	96"/125"	60.4"/125" (ALP)	60.4"/61.5" (AKE, AKH)
31-42L/R*			3174	1587
51*			X	1587

*Valid for TCMNV only.

Note: Where a ULD is transported on position 51, the total useable weight of bulk is reduced to 1183kg.

UNCONTROLLED DOCUMENT (28 NOVEMBER 2024 16:00:14)

UNCONTROLLED DOCUMENT

11.2.3 Bulk Hold

Valid for registrations: **TCMCC, TCMCG, TCMCE, 4LUCK**

Compt.	Volume (m3)	Max. Weight (kg)	Max. Capacity (kg)
A	11.5	1841	2770
B	4.1	657	
D	1.7	272	

Valid for registration: **TCMNV**

Compt.	Volume (m3)	Max. Weight (kg)	Max. Capacity (kg)
A	4.1	657	1442
B	1.7	272	
D	3.2	513	

Note: Position 51 is located behind position 42L and can be accessed from the Aft Lower-deck door.

UNCONTROLLED DOCUMENT

UNCONTROLLED DOCUMENT

UNCONTROLLED DOCUMENT (28 NOVEMBER 2024 16:00:14)

12. Aircraft ULD Compatibility

12.1 Main Deck Configurations TCMNV

The loading combinations shown here are examples only. More combinations are possible. Full information covering possible loading combinations, and how they interact, can be found in the Sable system.

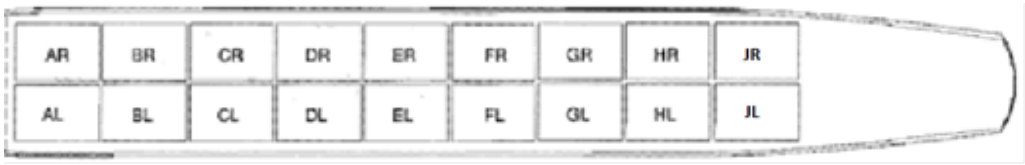

Configuration A: 3 Lateral Centre-line and 18 Longitudinal Twin-track 125”/88” positions

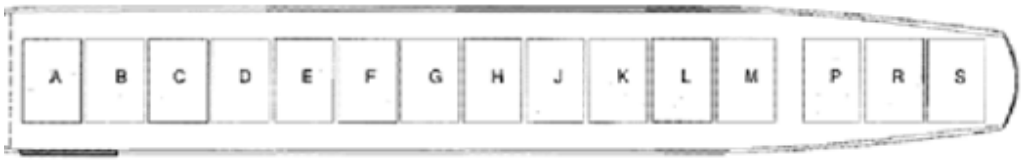

Configuration B: 15 Lateral Centre-line 125”/88” positions

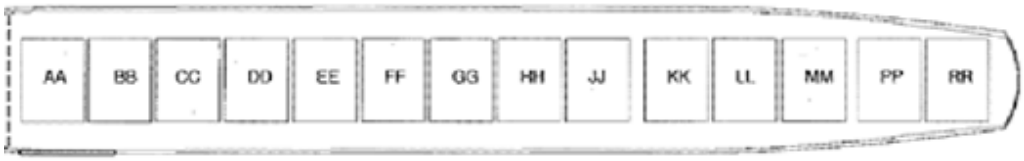

Configuration C: 14 Centre-line Lateral 125”/96” positions



Configuration D : 7 Longitudinal Centre-line 125”/96” positions

UNCONTROLLED DOCUMENT
UNCONTROLLED DOCUMENT

UNCONTROLLED DOCUMENT (28 NOVEMBER 2024 16:00:14)

UNCONTROLLED DOCUMENT

12.2 Main Deck ULD Compatibility TCMNV

The following ULD type loading restrictions apply for configurations A to C. The ULD type can be loaded on positions marked with a 'Y'. The ULD type cannot be loaded on positions marked with a 'N'.

		ULD Type									
	Pos	AAA	AAC/ LAY	AAJ/ LAK	AAX	AMF	AMJ	AMP	PAG	PMC	RAP
A	AL/R	N	Y	Y	Y1	N	N	N	Y	N	N
	BL/R	N	Y	Y	Y1	N	N	N	Y	N	N
	CL/R	N	Y	Y	Y1	N	N	N	Y	N	N
	DL/R	N	Y	Y	Y1	N	N	N	Y	N	N
	EL/R	N	Y	Y	Y1	N	N	N	Y	N	N
	FL/R	N	Y	Y	Y1	N	N	N	Y	N	N
	GL/R	N	Y	Y	Y1	N	N	N	Y	N	N
	HL/R	N	Y	Y	Y1	N	N	N	Y	N	N
	JL/R	N	Y	Y	Y1	N	N	N	Y	N	N
B	A	Y	Y	Y	N	N	N	N	Y	N	Y2
	B	Y	Y	Y	N	N	N	N	Y	N	Y2
	C	Y	Y	Y	N	N	N	N	Y	N	Y
	D	Y	Y	Y	N	N	N	N	Y	N	Y
	E	Y	Y	Y	N	N	N	N	Y	N	Y
	F	Y	Y	Y	N	N	N	N	Y	N	Y
	G	Y	Y	Y	N	N	N	N	Y	N	Y
	H	Y	Y	Y	N	N	N	N	Y	N	Y
	J	Y	Y	Y	N	N	N	N	Y	N	Y
	K	Y	Y	Y	N	N	N	N	Y	N	Y
	L	Y	Y	Y	N	N	N	N	Y	N	Y
	M	Y	Y	Y	N	N	N	N	Y	N	Y
	P	Y	Y	Y	N	N	N	N	Y	N	Y
	R	Y	Y	Y	N	N	N	N	Y	N	Y
	S	Y	Y	Y	N	N	N	N	Y	N	Y2

Y1: AAX serial ranges 1000,-1583,3339-3856,4057-4168,6694-7143, 8234-8433 and 8474-9999 not allowed

Y2: Active RAP not allowed

Notes: No overhangs allowed for Configuration A.

UNCONTROLLED DOCUMENT (28 NOVEMBER 2024 16:00:14)

The following ULD type loading restrictions apply for configurations A to C. The ULD type can be loaded on positions marked with a 'Y'. The ULD type cannot be loaded on positions marked with a 'N'.

		ULD Type											
	Pos	AAA	AAC/ LAY	AAJ/ LAK	AAX	AMA	AMF	AMJ	AMP	AMV	PAG	PMC	RAP
C	AA	N	N	N	N	N	Y	N	Y	N	N	Y	N
	BB	N	N	N	N	N	Y	N	Y	N	N	Y	N
	CC	N	N	N	N	N	Y	N	Y	N	N	Y	N
	DD	N	N	N	N	N	Y	N	Y	N	N	Y	N
	EE	N	N	N	N	N	Y	N	Y	N	N	Y	N
	FF	N	N	N	N	N	Y	N	Y	N	N	Y	N
	GG	N	N	N	N	N	Y	N	Y	N	N	Y	N
	HH	N	N	N	N	N	Y	N	Y	N	N	Y	N
	JJ	N	N	N	N	N	Y	N	Y	N	N	Y	N
	KK	N	N	N	N	N	Y	N	Y	N	N	Y	N
	LL	N	N	N	N	N	N	N	Y	N	N	Y	N
	MM	N	N	N	N	N	N	N	Y	N	N	Y	N
	PP	N	N	N	N	N	N	N	Y	N	N	Y	N
	RR	N	N	N	N	N	N	N	Y	N	N	Y	N
D	AB	N	N	N	N	Y	N	Y3	Y	Y	N	Y	N
	BC	N	N	N	N	Y	N	Y3	Y	Y	N	Y	N
	CE	N	N	N	N	Y	N	Y3	Y	Y	N	Y	N
	EF	N	N	N	N	Y	N	Y3	Y	Y	N	Y	N
	FG	N	N	N	N	Y	N	Y3	Y	Y	N	Y	N
	GH	N	N	N	N	Y	N	Y3	Y	Y	N	Y	N
	HJ	N	N	N	N	Y	N	Y3	Y	Y	N	Y	N

Y3: AMJ must be loaded with the sloped side facing left (towards the door)

UNCONTROLLED DOCUMENT
UNCONTROLLED DOCUMENT

UNCONTROLLED DOCUMENT (28 NOVEMBER 2024 16:00:14)

UNCONTROLLED DOCUMENT

12.3 Main Deck Configurations TCMCC, TCMCG.

The loading combinations shown here are examples only. More combinations are possible. Full information covering possible loading combinations, and how they interact, can be found in the Sable system.



Configuration A: 3 Lateral Centre-line and 18 Longitudinal Twin-track 125”/88” positions

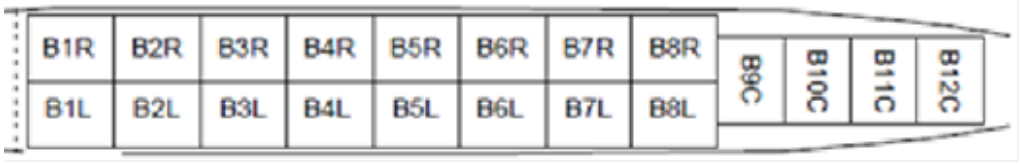

Configuration B: 16 Longitudinal twin-track and 4 Lateral centre-line 125/96” positions

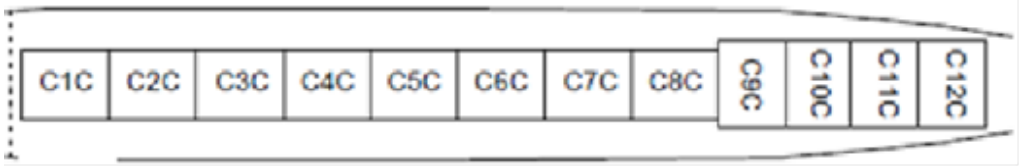

Configuration C: 8 Longitudinal single-track 125/96” and 4 Lateral centre-line 125/96” positions

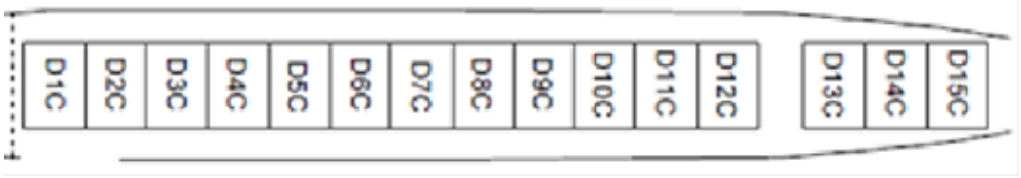

Configuration D: 15 Lateral single-track 125/88” positions

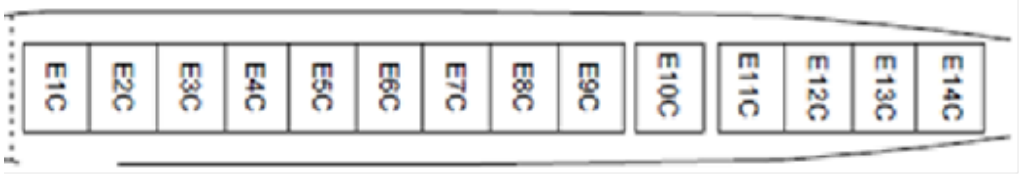

Configuration E : 14 Lateral single-track 125/96” positions

UNCONTROLLED DOCUMENT (28 NOVEMBER 2024 16:00:14)

UNCONTROLLED DOCUMENT

12.4 Main Deck ULD Compatibility TCMCC, TCMCG.

The following ULD type loading restrictions apply for configurations A to C. The ULD type can be loaded on positions marked with a 'Y'. The ULD type cannot be loaded on positions marked with a 'N'.

		ULD Type										
	Pos	AAA	AAC/ LAY	AAJ/ LAK	AAX	AMF	AMJ	AMP	AMV	PAG	PMC	RAP
A	A1 L/R	N	Y	Y	Y1	N	N	N	N	Y	N	N
	A2 L/R	N	Y	Y	Y1	N	N	N	N	Y	N	N
	A3 L/R	N	Y	Y	Y1	N	N	N	N	Y	N	N
	A4 L/R	N	Y	Y	Y1	N	N	N	N	Y	N	N
	A5 L/R	N	Y	Y	Y1	N	N	N	N	Y	N	N
	A6 L/R	N	Y	Y	Y1	N	N	N	N	Y	N	N
	A7 L/R	N	Y	Y	Y1	N	N	N	N	Y	N	N
	A8 L/R	N	Y	Y	Y1	N	N	N	N	Y	N	N
	A9 L/R	N	Y	Y	Y1	N	N	N	N	Y	N	N
	A10C	Y	Y	Y	N	N	N	N	N	Y	N	N
	A11C	Y	Y	Y	N	N	N	N	N	Y	N	N
	A12C	Y	Y	Y	N	N	N	N	N	Y	N	N
B	B1 L/R	N	N	N	N	N	N	N	N	N	Y	N
	B2 L/R	N	N	N	N	N	N	N	Y	N	Y	N
	B3 L/R	N	N	N	N	N	N	N	Y	N	Y	N
	B4 L/R	N	N	N	N	N	N	N	Y	N	Y	N
	B5 L/R	N	N	N	N	N	N	N	Y	N	Y	N
	B6 L/R	N	N	N	N	N	N	N	Y	N	Y	N
	B7 L/R	N	N	N	N	N	N	N	Y2	N	Y	N
	B8 L/R	N	N	N	N	N	N	N	N	N	Y	N
	B9 C	N	N	N	N	N	N	N	N	N	Y	N
	B10 C	N	N	N	N	N	N	N	N	N	Y	N
	B11 C	N	N	N	N	N	N	N	N	N	Y	N
	B12 C	N	N	N	N	N	N	N	N	N	Y	N
C	C1C	N	N	N	N	N	Y3	N	N	N	Y	N
	C2C	N	N	N	N	N	Y3	N	N	N	Y	N
	C3C	N	N	N	N	N	Y3	N	N	N	Y	N
	C4C	N	N	N	N	N	Y3	N	N	N	Y	N
	C5C	N	N	N	N	N	Y3	N	N	N	Y	N
	C6C	N	N	N	N	N	Y3	N	N	N	Y	N
	C7C	N	N	N	N	N	Y3	N	N	N	Y	N
	C8C	N	N	N	N	N	Y3	N	N	N	Y	N
	C9C	N	N	N	N	N	N	N	N	N	Y	N
	C10C	N	N	N	N	N	N	N	N	N	Y	N
	C11C	N	N	N	N	N	N	N	N	N	Y	N
	C12C	N	N	N	N	N	N	N	N	N	Y	N

Y1: AAX serial ranges 1000,-1583,3339-3856,4057-4168,6694-7143, 8234-8433 and 8474-9999 not allowed

Y2: AMV not allowed on position B7L

Y3: AMJ must be loaded with the sloped side facing left (towards the door)

UNCONTROLLED DOCUMENT (28 NOVEMBER 2024 16:00:14)

The following ULD type loading restrictions apply for configurations A to C. The ULD type can be loaded on positions marked with a 'Y'. The ULD type cannot be loaded on positions marked with a 'N'.

		ULD Type										
	Pos	AAA	AAC/ LAY	AAJ/ LAK	AAX	AMF	AMJ	AMP	AMV	PAG	PMC	RAP
D	D1C	Y	Y	Y	N	N	N	N	N	Y	N	Y4
	D2C	Y	Y	Y	N	N	N	N	N	Y	N	Y4
	D3C	Y	Y	Y	N	N	N	N	N	Y	N	Y
	D4C	Y	Y	Y	N	N	N	N	N	Y	N	Y
	C5C	Y	Y	Y	N	N	N	N	N	Y	N	Y
	D6C	Y	Y	Y	N	N	N	N	N	Y	N	Y
	D7C	Y	Y	Y	N	N	N	N	N	Y	N	Y
	D8C	Y	Y	Y	N	N	N	N	N	Y	N	Y
	D9C	Y	Y	Y	N	N	N	N	N	Y	N	Y
	D10C	Y	Y	Y	N	N	N	N	N	Y	N	Y
	D11C	Y	Y	Y	N	N	N	N	N	Y	N	Y
	D12C	Y	Y	Y	N	N	N	N	N	Y	N	Y
	D13C	Y	Y	Y	N	N	N	N	N	Y	N	Y
	D14C	Y	Y	Y	N	N	N	N	N	Y	N	Y
	D15C	Y	Y	Y	N	N	N	N	N	Y	N	Y4
E	E1C	N	N	N	N	Y	N	Y	N	N	Y	N
	E2C	N	N	N	N	Y	N	Y	N	N	Y	N
	E3C	N	N	N	N	Y	N	Y	N	N	Y	N
	E4C	N	N	N	N	Y	N	Y	N	N	Y	N
	E5C	N	N	N	N	Y	N	Y	N	N	Y	N
	E6C	N	N	N	N	Y	N	Y	N	N	Y	N
	E7C	N	N	N	N	Y	N	Y	N	N	Y	N
	E8C	N	N	N	N	Y	N	Y	N	N	Y	N
	E9C	N	N	N	N	Y	N	Y	N	N	Y	N
	E10C	N	N	N	N	Y	N	Y	N	N	Y	N
	E11C	N	N	N	N	N	N	Y	N	N	Y	N
	E12C	N	N	N	N	N	N	Y	N	N	Y	N
	E13C	N	N	N	N	N	N	Y	N	N	Y	N
	E14C	N	N	N	N	N	N	Y	N	N	Y	N

Y4: Active RAP not allowed

Notes:

No overhangs allowed - Configuration A.

The loading of two 96" pallet stacks side-by-side in twin-track configuration shall be avoided. The planning of 96" pallet stacks in twin-track configuration that required the pallet stacks to pass each other whilst loading or unloading shall be avoided. This is due to the lack of separation clearance between the pallet stacks when passing by each other, causing the pallet sets to become entangled.

UNCONTROLLED DOCUMENT
UNCONTROLLED DOCUMENT

UNCONTROLLED DOCUMENT (28 NOVEMBER 2024 16:00:14)

UNCONTROLLED DOCUMENT

12.5 Main Deck Configurations Main Deck ULD Compatibility TCMCE, 4LUCK.

The loading combinations shown here are examples only. More combinations are possible. Full information covering possible loading combinations, and how they interact, can be found in the Sable system.

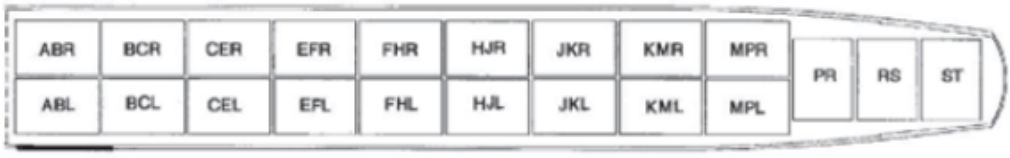

Configuration A: 18 Longitudinal twin-track and 3 Lateral centre-line 125/88” positions.



Configuration B: 16 Longitudinal twin-track 125/96” positions



Configuration C : 7 Longitudinal centre-line 125/96” positions.



Configuration D: 15 Lateral centre-line 125/88” positions.

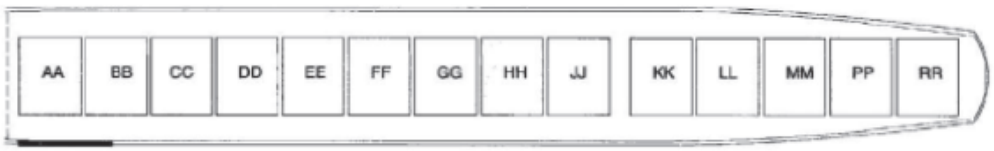

Configuration E: 14 Lateral centre-line 125/96” positions.

UNCONTROLLED DOCUMENT (28 NOVEMBER 2024 16:00:14)

UNCONTROLLED DOCUMENT

12.6 Main Deck ULD Compatibility TCMCE, 4LUCK.

The following ULD type loading restrictions apply for configurations A to C. The ULD type can be loaded on positions marked with a 'Y'. The ULD type cannot be loaded on positions marked with a 'N'.

		ULD Type										
	Pos	AAA	AAC/ LAY	AAJ/ LAK	AAX	AMF	AMJ	AMP	AMV	PAG	PMC	RAP
A	AB L/R	N	Y	Y	Y1	N	N	N	N	Y	N	N
	BC L/R	N	Y	Y	Y1	N	N	N	N	Y	N	N
	CE L/R	N	Y	Y	Y1	N	N	N	N	Y	N	N
	EF L/R	N	Y	Y	Y1	N	N	N	N	Y	N	N
	FH L/R	N	Y	Y	Y1	N	N	N	N	Y	N	N
	HJ L/R	N	Y	Y	Y1	N	N	N	N	Y	N	N
	JK L/R	N	Y	Y	Y1	N	N	N	N	Y	N	N
	KM L/R	N	Y	Y	Y1	N	N	N	N	Y	N	N
	MP L/R	N	Y	Y	Y1	N	N	N	N	Y	N	N
	PR	Y	Y	Y	N	N	N	N	N	Y	N	N
	RS	Y	Y	Y	N	N	N	N	N	Y	N	N
	ST	Y	Y	Y	N	N	N	N	N	Y	N	N
B	AB L/R	N	N	N	N	N	N	N	N	N	Y	N
	BC L/R	N	N	N	N	N	N	N	Y	N	Y	N
	CE L/R	N	N	N	N	N	N	N	Y	N	Y	N
	EF L/R	N	N	N	N	N	N	N	Y	N	Y	N
	FH L/R	N	N	N	N	N	N	N	Y	N	Y	N
	HJ L/R	N	N	N	N	N	N	N	Y	N	Y	N
	JK L/R	N	N	N	N	N	N	N	Y2	N	Y	N
	KM L/R	N	N	N	N	N	N	N	N	N	Y	N
C	AB	N	N	N	N	N	Y3	N	N	N	Y	N
	BC	N	N	N	N	N	Y3	N	N	N	Y	N
	CE	N	N	N	N	N	Y3	N	N	N	Y	N
	EF	N	N	N	N	N	Y3	N	N	N	Y	N
	FG	N	N	N	N	N	Y3	N	N	N	Y	N
	GH	N	N	N	N	N	Y3	N	N	N	Y	N
	HJ	N	N	N	N	N	Y3	N	N	N	Y	N
	JK	N	N	N	N	N	Y3	N	N	N	Y	N

Y1: AAX serial ranges 1000, -1583,3339-3856,4057-4168,6694-7143, 8234-8433 and 8474-9999 not allowed

Y2: AMV not allowed on position JKL

Y3: AMJ must be loaded with the sloped side facing left (towards the door)

Notes: No overhangs allowed - Configuration A.

The loading of two 96" pallet stacks side-by-side in twin-track configuration shall be avoided. The planning of 96" pallet stacks in twin-track configuration that required the pallet stacks to pass each other whilst loading or unloading shall be avoided. This is due to the lack of separation clearance between the pallet stacks when passing by each other, causing the pallet sets to become entangled.

UNCONTROLLED DOCUMENT (28 NOVEMBER 2024 16:00:14)

The following ULD type loading restrictions apply for configurations A to C. The ULD type can be loaded on positions marked with a 'Y'. The ULD type cannot be loaded on positions marked with a 'N'.

		ULD Type										
	Pos	AAA	AAC/ LAY	AAJ/ LAK	AAX	AMF	AMJ	AMP	AMV	PAG	PMC	RAP
D	A	Y	Y	Y	N	N	N	N	N	Y	N	Y4
	B	Y	Y	Y	N	N	N	N	N	Y	N	Y4
	C	Y	Y	Y	N	N	N	N	N	Y	N	Y
	D	Y	Y	Y	N	N	N	N	N	Y	N	Y
	E	Y	Y	Y	N	N	N	N	N	Y	N	Y
	F	Y	Y	Y	N	N	N	N	N	Y	N	Y
	G	Y	Y	Y	N	N	N	N	N	Y	N	Y
	H	Y	Y	Y	N	N	N	N	N	Y	N	Y
	J	Y	Y	Y	N	N	N	N	N	Y	N	Y
	K	Y	Y	Y	N	N	N	N	N	Y	N	Y
	L	Y	Y	Y	N	N	N	N	N	Y	N	Y
	M	Y	Y	Y	N	N	N	N	N	Y	N	Y
	P	Y	Y	Y	N	N	N	N	N	Y	N	Y
	R	Y	Y	Y	N	N	N	N	N	Y	N	Y
	S	Y	Y	Y	N	N	N	N	N	Y	N	Y
E	AA	N	N	N	N	Y	N	Y	N	N	Y	N
	BB	N	N	N	N	Y	N	Y	N	N	Y	N
	CC	N	N	N	N	Y	N	Y	N	N	Y	N
	DD	N	N	N	N	Y	N	Y	N	N	Y	N
	EE	N	N	N	N	Y	N	Y	N	N	Y	N
	FF	N	N	N	N	Y	N	Y	N	N	Y	N
	GG	N	N	N	N	Y	N	Y	N	N	Y	N
	HH	N	N	N	N	Y	N	Y	N	N	Y	N
	JJ	N	N	N	N	Y	N	Y	N	N	Y	N
	KK	N	N	N	N	Y	N	Y	N	N	Y	N
	LL	N	N	N	N	N	N	Y	N	N	Y	N
	MM	N	N	N	N	N	N	Y	N	N	Y	N
	PP	N	N	N	N	N	N	Y	N	N	Y	N
	RR	N	N	N	N	N	N	Y	N	N	Y	N

Y4: Active RAP not allowed

Notes: nil

UNCONTROLLED DOCUMENT
UNCONTROLLED DOCUMENT

UNCONTROLLED DOCUMENT (28 NOVEMBER 2024 16:00:14)

12.7 Lower Deck Configurations

12.7.1 Forward Hold



Configuration 1: 4 Lateral 125”/88” or 125”/96” positions



Configuration 2: 6 Lateral 125”/60.4” positions



Configuration 3: 12 Twin-track 61.5”/60.4” positions

12.7.2 Aft Hold

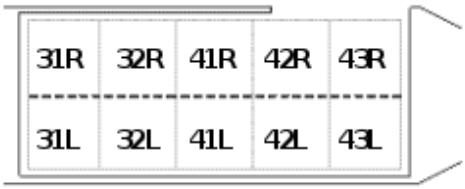

Configuration 1: 10 Twin-track 61.5”/60.4” positions or 5 Lateral 125”/60.4”positions

UNCONTROLLED DOCUMENT
UNCONTROLLED DOCUMENT

UNCONTROLLED DOCUMENT (28 NOVEMBER 2024 16:00:14)

UNCONTROLLED DOCUMENT

12.8 Lower Deck ULD Compatibility

The following ULD type loading restrictions apply. The ULD type can be loaded on positions marked with a 'Y'. The ULD type cannot be loaded on positions marked with a 'N'.

		ULD Type								
	Pos	AAJ/ LAK	AMF	RAP	PAG	PMC	PLA/ PLW	AKE	ALF	ALP
FWD 1	11P	Y	Y	Y	Y	Y	Y	N	N	N
	12P	Y	Y	Y	Y	Y	Y	N	N	N
	21P	Y	Y	Y	Y	Y	Y	N	N	N
	22P	Y	Y	Y	Y	Y	Y	N	N	N
FWD 2	11	N	N	N	N	N	Y	N	Y	Y
	12	N	N	N	N	N	Y	N	Y	Y
	13	N	N	N	N	N	Y	N	Y	Y
	21	N	N	N	N	N	Y	N	Y	Y
	22	N	N	N	N	N	Y	N	Y	Y
	23	N	N	N	N	N	Y	N	Y	Y
FWD 3	11R/L	N	N	N	N	N	N	Y	N	N
	12R/L	N	N	N	N	N	N	Y	N	N
	13R/L	N	N	N	N	N	N	Y	N	N
	21R/L	N	N	N	N	N	N	Y	N	N
	22R/L	N	N	N	N	N	N	Y	N	N
	23R/L	N	N	N	N	N	N	Y	N	N
AFT 1	31R/L	N	N	N	N	N	Y	Y	Y	Y
	32R/L	N	N	N	N	N	Y	Y	Y	Y
	33R/L	N	N	N	N	N	Y	Y	Y	Y
	41R/L	N	N	N	N	N	Y	Y	Y	Y
	42R/L	N	N	N	N	N	Y	Y	Y	Y

Notes AFT hold:

All ALP and ALF ULDs must be inspected to ensure the baseplate is flat, to prevent the ULDs from jumping the locks. ULDs with a bent baseplate will not be sufficiently restrained.

UNCONTROLLED DOCUMENT (28 NOVEMBER 2024 16:00:14)

13. Loading and Un-Loading

13.1 Cargo Loading System (CLS)

The aircraft is equipped with Lower-deck PDUs, controlled by a joystick located in the doorway of the FWD and AFT holds, and may be used for both lateral and longitudinal movement of ULDs.

Only suitably trained staff may use the CLS.

13.2 Un-Loading Sequence

Step 1: Un-load the aft lower deck and in parallel start un-loading the bulk hold.

Step 2: Un-load the ULDs on the main deck in the following step sequence, and respect standard stage un-loading method.

a. Un-load ULDs in the following numbered sequence



b. Temporarily position HL and JL onto positions CL and DL



c. Stage Un-load BR to JR, then temporarily position PR/RS/ST onto positions G/H/J



d. Un-load the remaining ULDs in the following numbered sequence



Step 3: Un-load the forward lower deck.

Note: Whilst positions CR – JR are being offloaded, positions PR/RS/ST shall be moved forward as part of the standard step-unloading procedure until they are in position CR/DR/ER (or positions forward of F) where they will remain until finally being offloaded in the final stage of Step 2. This will provide counter ballast prior to offloading CR – JR.

UNCONTROLLED DOCUMENT
UNCONTROLLED DOCUMENT

UNCONTROLLED DOCUMENT (28 NOVEMBER 2024 16:00:14)

13.3 Loading Sequence

Step 1: Load the forward lower deck.

Step 2: Load the ULDs on the main deck in the following step sequence, and respect standard stage loading method.

a. Temporarily position ST/RS/PR onto positions J/H/G, then temporarily position JL and HL onto positions DL and CL

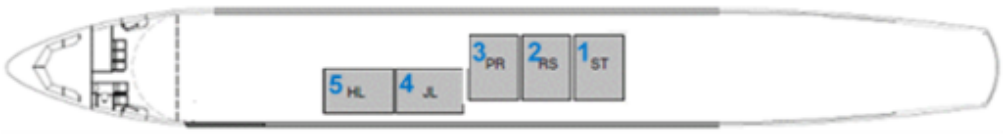

b. Move PR/RS/ST into final position, then stage load JR to BR.

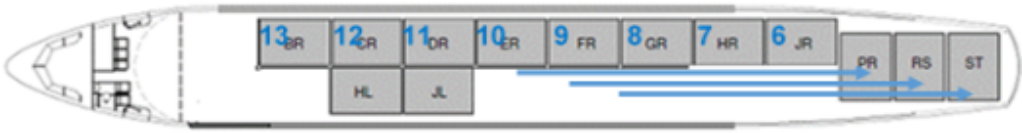

c. Move JL and HL into final position



d. Load the remaining ULDs in the following numbered sequence



Step 3: Load the aft lower deck.

UNCONTROLLED DOCUMENT
UNCONTROLLED DOCUMENT

UNCONTROLLED DOCUMENT (28 NOVEMBER 2024 16:00:14)

UNCONTROLLED DOCUMENT

13.4 Loading Notes

13.4.1 Operation of Cargo Doors

Cargo Doors shall be operated one at a time, not simultaneously. Attempting to operate more than one cargo door at the same time may cause the hydraulic system to fail requiring engineering to rectify the situation.

13.4.2 Ground Stability

The A300-600 Freighter is a stable aircraft, and it is possible to load and/or un-load more than one deck at the same time. Keep in mind that all loads aft of position **E** creates an aft moment.

As a general rule, once the FWD hold has been loaded with a minimum of 6 tons, loading may proceed with minimum risk of tail-tipping regardless of method used. However, due care must be exercised if doing so, ensuring at all times that the actual loading and/or un-loading procedure employed does not result in a tail-tip condition.

MNG Loadmaster will supervise loading and unloading the aircraft.

13.4.2.1 Pallet Stacks

Loading of pallet stacks is not allowed on positions A, AA, AL/AR, AB, RR, S and ST. The loading of two 96" pallet stacks side-by-side in twin-track configuration shall be avoided. The planning of 96" pallet stacks in twin-track configuration that required the pallet stacks to pass each other whilst loading or unloading shall be avoided. This is due to the lack of separation clearance between the pallet stacks when passing by each other, causing the pallet sets to become entangled.

UNCONTROLLED DOCUMENT

UNCONTROLLED DOCUMENT

UNCONTROLLED DOCUMENT (28 NOVEMBER 2024 16:00:14)

14. Rigid, Oversized and Special Loads

For guidance on the handling of special loads, please refer to the Special Loads Regional Contact Instructions outlined in Chapter 6 **6.12.22.3 - Determining Loadability of Special Loads**. Where direct operator approval is required, the Regional Airside Team will liaise with Global Airside as needed.

14.1 Floating / Heavy Pallets

ULDs which are heavier than the standard allowed maximum gross weight may be loaded on the main deck as centre load.

Permission must be sought from MNG before accepting any ULDs which require loading on a floating position.

The permission, including a special loading instruction, will be granted only after all details concerning the load and the loading have been checked and clarified.

14.2 Crushable Cargo Requirements

Compressible cargo must always be loaded forward of any other cargo on the Main-deck.

- For centre-line loading, positions A, AA or AB must be loaded with compressible cargo.
- For twin-track loading, positions ABL and ABR must be loaded with compressible cargo.
- For mixed centre-line and twin-track loading, either positions ABL and ABR must be loaded with compressible cargo, or the first set of twin-track ULDs must be strapped and restrained to 9G.

Where Rigid Cargo has been identified, the following positions shall be loaded with Crushable Cargo ULDs suitable for protecting the barrier wall against unrestrained Rigid Cargo.

Configuration	Positions with ULDs with crushable cargo suitable for protecting the barrier wall
Twin track 125/88	ABR/ABL
Twin track 125/96	ABR/ABL
Lateral Centre Line 88/125	A
Lateral Centre Line 96/125	AA
Longitudinal Centre Line 125/96	AB

For mixed centre-line and twin-track loading, either positions ABL and ABR must be loaded with Crushable cargo ULDs, or the first set of twin-track ULDs must be strapped and restrained to 9G. The requirement to strap the first twin-track ULDs does not apply if AMJ containers are loaded in front of the twin-track ULDs.

14.3 Piercing Cargo

Piercing cargo may not be loaded on the first and last loaded position on the aircraft.

UNCONTROLLED DOCUMENT
UNCONTROLLED DOCUMENT

UNCONTROLLED DOCUMENT (28 NOVEMBER 2024 16:00:14)

14.4 Aircraft Engines

The following aircraft engines are loadable on the A300-600 Freighter.

Engine Type	Loaded on	Allowed Loading Positions	Loading direction
BR710 BR715 CFM56-2	96” Pallet	Main deck centre-line configuration 3 Check height and observe overlap	Not important
CFM56-3 CFM56-5 CFM56-7 V2500			
JT3 JT8 complete			
JT8 Partially assembled (without thrust reverser)		Main deck	
		11P, 12P, 21P and 22P	Load through the hold door with the exhaust (aft end) of the engine first

14.5 Live Animals

14.5.1 Horses

Max. Number of Horses per Aircraft	39
Max. Number of Horses per Box	3
Groom information	MNG require a suitable number of grooms to be onboard during flight, depending on the number of horses carried.
Approved Horse Transport ULDs	MNG approved horse boxes are allowed. Foreign equipment maybe be used, provided it is IATA approved, leak-proof and covered, i.e. HMJ or equivalent
Approved Loading Configurations	125”/96” Lateral

UNCONTROLLED DOCUMENT
UNCONTROLLED DOCUMENT

UNCONTROLLED DOCUMENT (28 NOVEMBER 2024 16:00:14)

UNCONTROLLED DOCUMENT

14.5.2 Other Live Animals

The following table provides a list of commonly transported animals. If there is a requirement to transport animals not listed below, contact your Special Loads Regional contact for more information.

	Main-Deck	FWD Hold	AFT Hold	Compt. 5
Horses	Yes (max 39 horses)	No		
Day-old chickens	Yes (max 5 pallets)	No	No	No
Monkeys	Yes			
Pigs				
Cattle				
Sheep or Goats				
Dogs or Cats				
Small mammals or Birds				
Tropical Fish				
Reptiles or Amphibians				
Eels				
Crustaceans or Molluscs				
Bees				
Hatching eggs				

Note: Loading Live Animals (AVI) in Lower deck compartments is not allowed.

UNCONTROLLED DOCUMENT

UNCONTROLLED DOCUMENT (28 NOVEMBER 2024 16:00:14)

15. Restricted Commodities Loading

15.1 Radioactive (RRY), Magnetised (MAG) and Cargo Aircraft Only (CAO)

The following Dangerous Good type loading restrictions apply. The Dangerous Good type can be loaded on positions marked with a 'Y'. The Dangerous Good type cannot be loaded on positions marked with a 'N'.

	Position												
	Main-deck										Lower-deck		
DG Type	AL/R	BL/R	CL/R	DL/R	EL/R	FL/R	GL/R	HL/R	JL/R	PR-ST	FWD	AFT	Bulk
MAG	N	N	N	N	Y	Y	Y	Y	Y	Y	N	Y	N
CAO	Y*	Y*	Y*	Y*	Y*	Y*	Y*	Y*	Y*	N	Y	Y	N
RRY (max. 50 TI combined)	N	N	Y	Y	Y	Y	Y	Y	Y	Y	N	Y	N
RRY (max. 200 TI combined)	N	N	N	N	Y	Y	Y	Y	Y	Y	N	Y	N

***Note:** Cargo Aircraft Only (CAO) can be loaded on any Main Deck position AL to JL (or A1L to A9L or ABL to MPL depending on the registration) provided they are loaded accessible. Accessible means that:

- The CAO is loaded on a pallet
- All left side positions (AL up to JL) forward of the CAO are loaded with 88" pallets with 25cm (10") aisle

15.2 Dry Ice

Please see the Global Supplementary Operational Document **Dry Ice Consolidation table** for the current maximum allowed Dry Ice limits.

Dry Ice (ICE) and Live Animals (AVI)

There is no weight limit for the loading of Dry Ice (ICE) together with Live Animals (AVI) on the Main-deck.

Loading of AVI **together with** ICE is **not allowed** in the FWD & AFT holds or bulk compartment.

15.3 Lithium Batteries

Please see the Global Supplementary Operational Document **Lithium Battery Loadability Consolidation Table** for the current UN3480 Section IA/IB (RBI), UN3090 Section IA/IB (RBM), UN3481 Section I (RLI), UN3091 Section I (RLM) load ability limits.

UNCONTROLLED DOCUMENT (28 NOVEMBER 2024 16:00:14)

UNCONTROLLED DOCUMENT

16. Messaging and Reporting

16.1 Messaging

Standard messaging rules apply.

16.2 Reporting

Standard reporting rules apply.

UNCONTROLLED DOCUMENT

UNCONTROLLED DOCUMENT

UNCONTROLLED DOCUMENT (28 NOVEMBER 2024 16:00:14)

17. Load Control Data

17.1 Standard Mass Additions

17.1.1 Additional Crew Members (ACM)

Maximum Number of ACMs:	8
Mass of ACM:	100 kg

17.1.2 Fly Away Kit (FAK) and Ballast

FAK is carried as standard on this aircraft.

Ballast is not carried as standard on this aircraft.

17.2 Minimum Fuel and Standard Taxi Fuel

Minimum Fuel:	8700 kg
Standard Taxi Fuel:	500 kg

17.3 LMC Restrictions

Maximum SABLE load sheet LMC:	+/- 2500 kg
Maximum Manual load sheet LMC:	+/- 2500 kg

UNCONTROLLED DOCUMENT
UNCONTROLLED DOCUMENT

UNCONTROLLED DOCUMENT (28 NOVEMBER 2024 16:00:14)

18. Maximum Package Dimensions

18.1 Main Cargo Door

Valid For: TCMNV, TCMCC, TCMCG, TCMCE, 4LUCK

Weight and Balance Manual Supplement

LENGTH (m)	WIDTH (m)																													
	0.15	0.30	0.46	0.61	0.76	0.91	1.07	1.22	1.37	1.52	1.68	1.83	1.98	2.13	2.29	2.44	2.59	2.74	2.90	3.05	3.20	3.35								
0.15	29.64	24.45	20.30	17.37	15.19	13.50	12.15	11.06	10.15	9.38	8.73	8.16	7.67	7.24	6.86	6.52	6.21	5.94	4.78	4.78	4.78	4.78								
0.30	29.64	24.45	20.30	17.37	15.19	13.50	12.15	11.06	10.15	9.38	8.73	8.16	7.67	7.24	6.86	6.52	6.21	5.94	4.78	4.78	4.78	4.78								
0.46	29.64	24.45	20.30	17.37	15.19	13.50	12.15	11.06	10.15	9.38	8.73	8.16	7.67	7.24	6.86	6.52	6.21	5.94	4.78	4.78	4.78	4.78								
0.61	29.64	24.45	20.30	17.37	15.19	13.50	12.15	11.06	10.15	9.38	8.73	8.16	7.67	7.24	6.86	6.52	6.21	5.94	4.78	4.78	4.78	4.78								
0.76	29.64	24.45	20.30	17.37	15.19	13.50	12.15	11.06	10.15	9.38	8.73	8.16	7.67	7.24	6.86	6.52	6.21	5.94	4.78	4.78	4.78	4.78								
0.91	29.64	24.45	20.30	17.37	15.19	13.50	12.15	11.06	10.15	9.38	8.73	8.16	7.67	7.24	6.86	6.52	6.21	5.94	4.78	4.78	4.78	4.78								
1.07	29.64	24.45	20.30	17.37	15.19	13.50	12.15	11.06	10.15	9.38	8.73	8.16	7.67	7.24	6.86	6.52	6.21	5.94	4.78	4.78	4.78	4.78								
1.22	28.82	23.19	19.41	16.70	14.67	13.08	11.81	10.77	9.91	9.17	8.55	8.00	7.53	7.11	6.74	6.42	6.12	5.86	4.70	4.70	4.70	4.70								
1.37	25.36	20.86	17.73	15.43	13.66	12.27	11.14	10.20	9.42	8.75	8.18	7.68	7.24	6.85	6.51	6.21	5.94	4.55	4.55	4.55	4.55	4.55								
1.52	21.95	18.47	15.95	14.04	12.55	11.36	10.37	9.55	8.86	8.26	7.74	7.29	6.90	6.55	6.23	5.95	5.71	4.36	4.36	4.36	4.36	4.36								
1.68	19.02	16.32	14.30	12.73	11.48	10.46	9.61	8.90	8.29	7.76	7.30	6.89	6.54	6.22	5.94	5.68	5.46	4.14	4.14	4.14	4.14	4.14								
1.83	16.38	14.30	12.71	11.44	10.40	9.55	8.83	8.21	7.68	7.22	6.82	6.46	6.14	5.86	5.60	5.38	3.89	3.89	3.89	3.89	3.89	3.89								
1.98	13.96	12.40	11.16	10.15	9.32	8.61	8.01	7.49	7.04	6.64	6.29	5.98	5.70	5.45	5.23	5.03	3.58	3.58	3.58	3.58	3.58	3.58								
2.13	11.98	10.79	9.81	9.01	8.33	7.74	7.24	6.80	6.42	6.08	5.77	5.50	5.26	5.04	4.85	3.25	3.25	3.25	3.25	3.25	3.25	3.25								
2.29	9.87	9.02	8.30	7.69	7.17	6.71	6.31	5.96	5.65	5.37	5.12	4.89	4.68	4.50	2.78	2.78	2.78	2.78	2.78	2.78	2.78	2.78								
2.44	8.32	7.67	7.12	6.64	6.23	5.86	5.53	5.24	4.98	4.74	4.53	4.33	2.31	2.31	2.31	2.31	2.31	2.31	2.31	2.31	2.31	2.31								
	SWIVELING/DIAGONAL LOADING																		STRAIGHT LOADING											

UNCONTROLLED DOCUMENT

UNCONTROLLED DOCUMENT

UNCONTROLLED DOCUMENT (28 NOVEMBER 2024 16:00:14)