UNCONTROLLED DOCUMENT



MNB A332F
MNG Cargo A330-200F

Revision: 4
Date: 03 December 2024

1 MNG Cargo A330-243F Registrations
2 Aircraft Dimensions
3 Aircraft Servicing Points and Specifications
4 Ground Support Equipment
5 Standard Turnaround Times
6 Safety Areas
7 Strong Wind Conditions
8 Aircraft Door Dimensions
9 Compartment Classification and Air-Conditioning
10 Aircraft Cabin Contour Dimensions
11 Maximum Position Weights
12 Aircraft ULD Compatibility
13 Loading and Un-Loading
14 Rigid, Oversized and Special Loads
15 Restricted Commodities Loading
16 Messaging and Reporting
17 Load Control Data
18 Maximum Package Dimensions

UNCONTROLLED DOCUMENT

UNCONTROLLED DOCUMENT (03 DECEMBER 2024 17:30:09)

Page	Date	Comment
6	03 December 2024	Turn-around time amended to 1:40 hours

UNCONTROLLED DOCUMENT

UNCONTROLLED DOCUMENT

1. MNG Cargo A330-243F Registrations

IATA Designator:	**MB**
ICAO Designator:	**MNG**
Valid for:	**TCMCZ, TCMCU**

UNCONTROLLED DOCUMENT
UNCONTROLLED DOCUMENT

2. Aircraft Dimensions

Front View

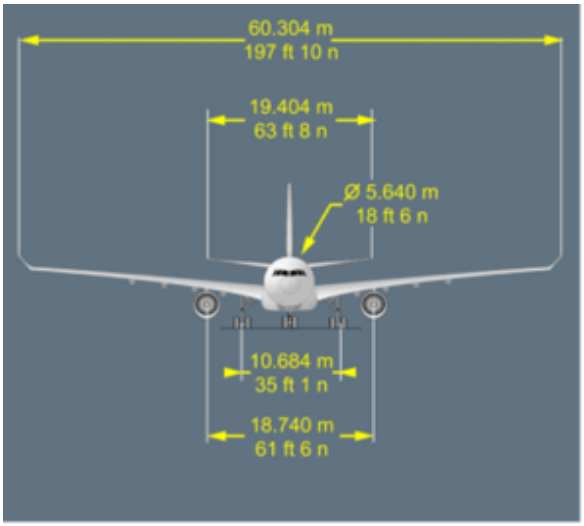

Top View

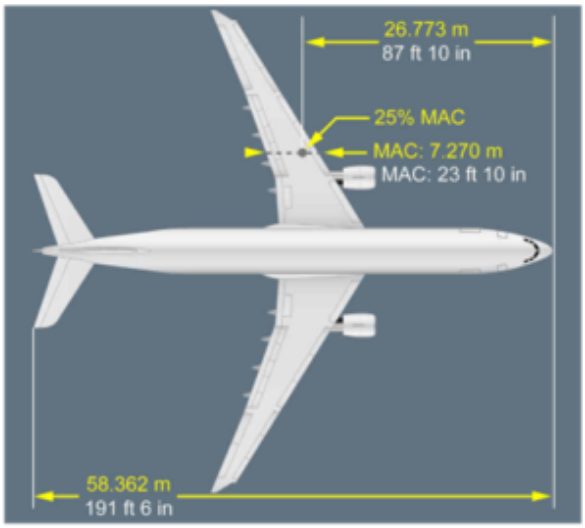

Side view

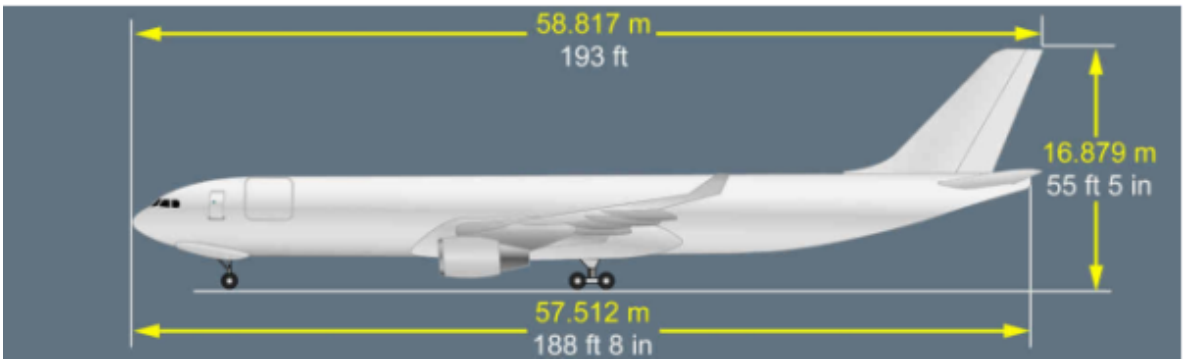

UNCONTROLLED DOCUMENT
UNCONTROLLED DOCUMENT

UNCONTROLLED DOCUMENT (03 DECEMBER 2024 17:30:09)

UNCONTROLLED DOCUMENT

3. Aircraft Servicing Points and Specifications

3.1 Servicing Points

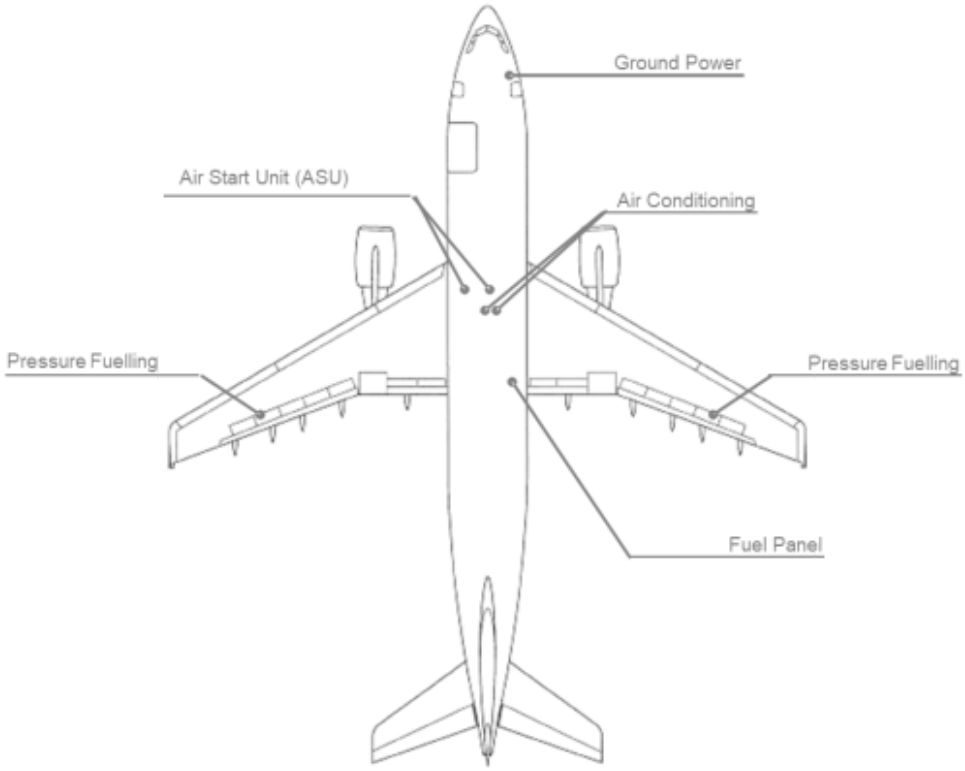

System	Distance				Height from Ground	
	AFT of Nose		From A/C Centre-line		Nominal	
	Meters	Inches	Meters	Inches	Meters	Inches
Air Conditioning	26.90	1059	0.54L	21L	1.85	73
Electrical	7.00	276	On A/C Centre-line		1.65	65
Fuel	27.80	1094	12.60R	469R	4.20	165
Fuel Panel	36.42	1434	3.24R	128R	1.85	73
Potable Water	43.88	1729	0.51R	20R	3.35	132
Lavatory System	46.39	1828	0.09L	3L	3.65	144
Pneumatic	28.61	1126	0.84L	33L	1.93	76

3.2 Servicing Specifications

System	Requirements	Notes
Ground Power Unit	115/200V AC / 90 kVA / 400 Hz	
Fuel	Jet A1	
Air Condition Unit	Maximum Flow Rate - depends on ambient air temperature	2 ACU inlets available
Air Start Unit	Minimum Capacity and Max. / Min. pressure - depends on ambient air temperature	2 ASU inlets available. 2 ASUs may be required, depending on flow rate and ambient air temperature.

UNCONTROLLED DOCUMENT (03 DECEMBER 2024 17:30:09)

UNCONTROLLED DOCUMENT

4. Ground Support Equipment

4.1 Positioning of GSE

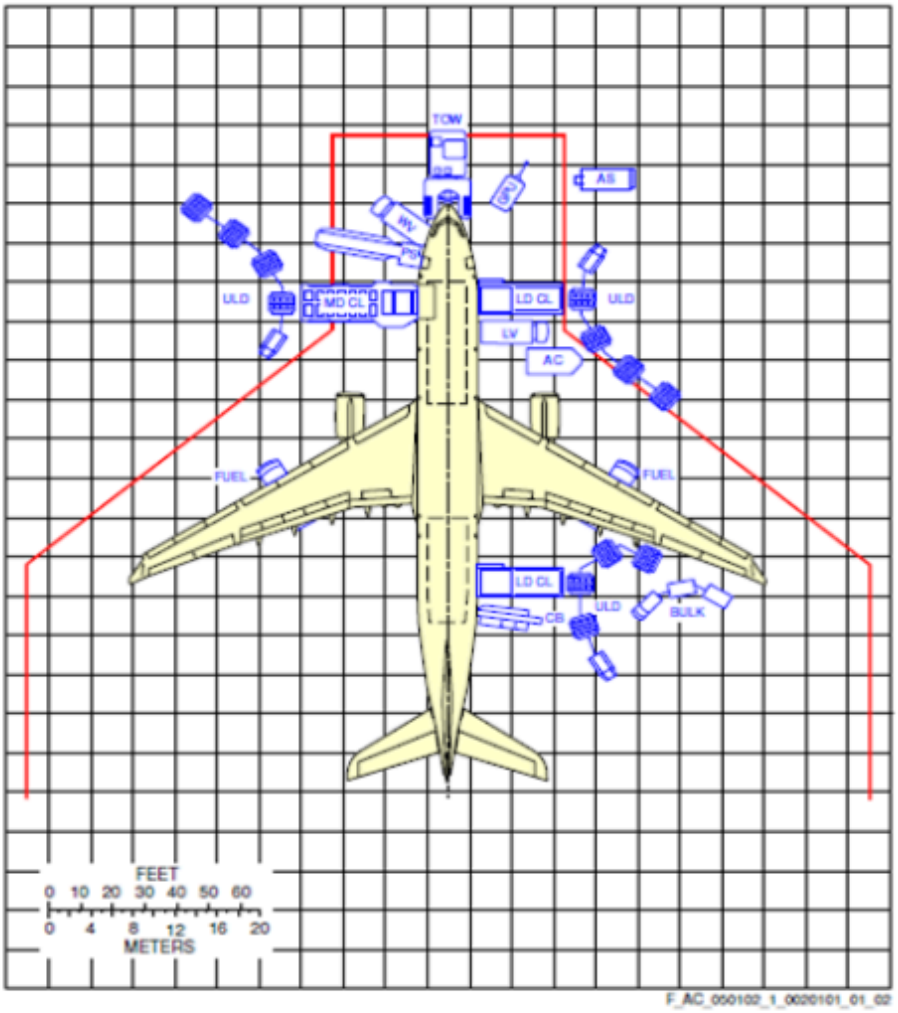

Airplane Servicing Arrangements
Typical Ramp Layout (Open Apron)

4.2 GSE Requirements

GSE	Type	Quantity
High Loader	Main-deck	1
	Standard	2
Crew stairs*	Platform height 4.82 – 5.00 meters	1
Ground Power Unit	Diesel, Electric or Ground-powered	1
Belt Loader	Standard (9 meter recommended)	1
Tractor	N/A	6
Dolly Wagon Main-deck	125”/88” and 125”/96” capable	Up to 23
Dolly Wagon Lower-deck	125”/88” and 125”/96” capable	Up to 8
	60.4”/61.5” or 60.4/125” capable	Up to 26
Belly Container / Wagon	As required	According to load

UNCONTROLLED DOCUMENT (03 DECEMBER 2024 17:30:09)

UNCONTROLLED DOCUMENT

5. Standard Turnaround Times

Turn-around time	01:40 hours

UNCONTROLLED DOCUMENT

UNCONTROLLED DOCUMENT

UNCONTROLLED DOCUMENT (03 DECEMBER 2024 17:30:09)

6. Safety Areas

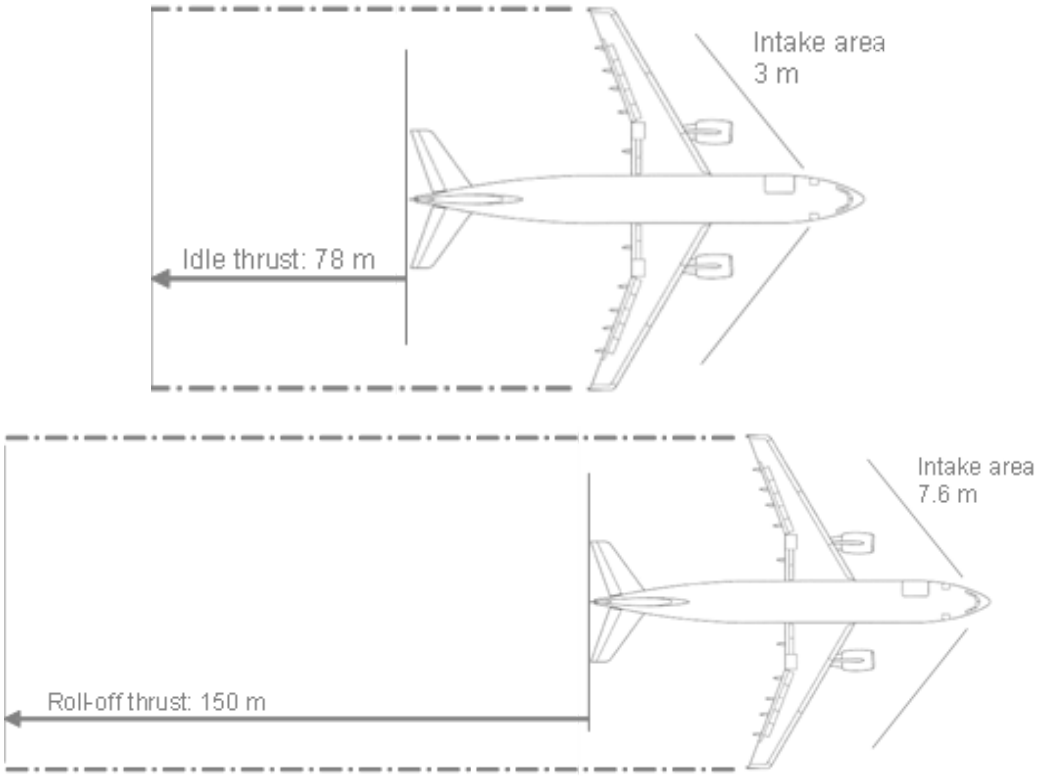

UNCONTROLLED DOCUMENT
UNCONTROLLED DOCUMENT

UNCONTROLLED DOCUMENT (03 DECEMBER 2024 17:30:09)

7. Strong Wind Conditions

If the wind conditions on the ramp reach the following speeds, the corresponding actions shall be taken.

Wind Speed	Action
Up to 40 knots	Normal Operations: All doors can be opened and left open.
Up to 50 knots	Normal Operations: If the aircraft nose is positioned into the wind.
More than 40 knots	Do not open beyond Canopy Position
More than 60 knots	All open doors shall be closed immediately (Regardless of the angle of the wind).

UNCONTROLLED DOCUMENT
UNCONTROLLED DOCUMENT

UNCONTROLLED DOCUMENT (03 DECEMBER 2024 17:30:09)

8. Aircraft Door Dimensions

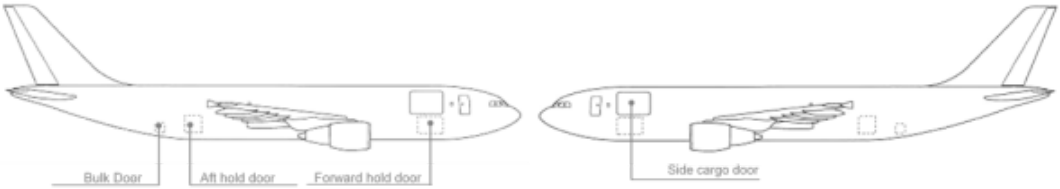

Door width, height, and sill height are defined as follows.

(This drawing is for illustration purposes only and may not be an exact representation of this aircraft type)

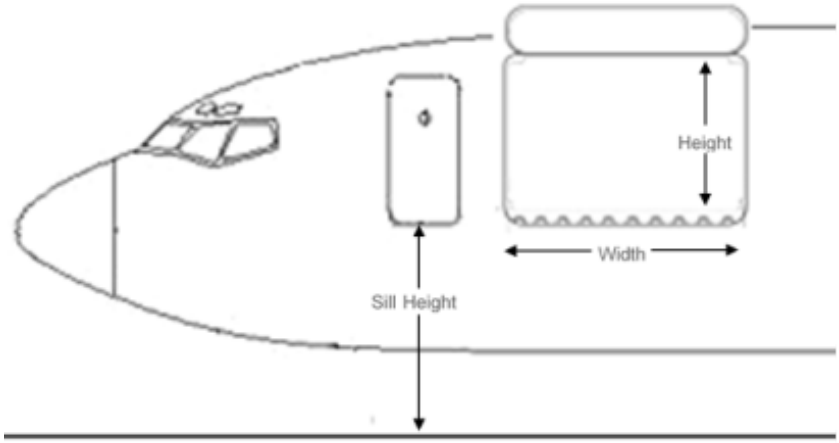

Dimensions are in centimetres (cm), inches (in) and meters (m).

Door	Door Width (cm)	Door Width (in)	Door Height (cm)	Door Height (in)	Max. Door Sill Height (m)
Crew Door	-		-		4.98
Side Cargo Door	358.1	140.98	256.1	100.83	5.06
Forward Hold	270.1	106.34	166.9	66.89	3.11
Aft Hold	272.1	107.13	168.2	66.22	3.52
Bulk Hold	95	37.40	63.7	25.08	3.61

Maximum height for a Lower Deck ULD is 164cm (64 inches)

UNCONTROLLED DOCUMENT (03 DECEMBER 2024 17:30:09)

9. Compartment Classification and Air-Conditioning

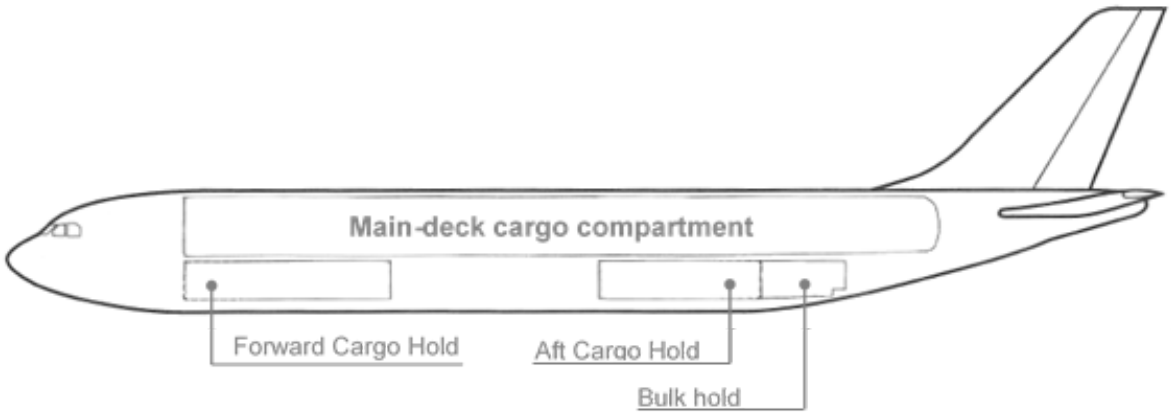

9.1 Compartment Classification

Compartment		Features
Main-deck	Positions ABL to PRL loaded with 88” or 96” ULD **with** 50cm (18”) isle	- Classification **E**
		- Pressurisation
		- Smoke Detection
		- **Accessible** during flight
	Positions ABL to PRL loaded with 88” or 96” ULD **without** 50 cm (18”) aisle	- Classification **B**
		- Pressurisation
		- Smoke Detection
		- **In-accessible** during flight
Lower-deck Forward and Aft Compartments		- Classification **C**
		- Pressurisation
		- Smoke Detection
		- Fire Suppression
		- **In-accessible** during flight

9.2 Air-Conditioning

	Main-deck	Forward Hold	Aft Hold	Bulk
Temperature	5 C to 25C	5 C to 25C	5 C to 25C	5 C to 25C
Heating	Yes	Yes		Yes
Heat adjust	Yes	Yes		Yes
Cooling	Yes	Yes		Yes
Ventilation	Yes	Yes		Yes

UNCONTROLLED DOCUMENT
UNCONTROLLED DOCUMENT

UNCONTROLLED DOCUMENT (03 DECEMBER 2024 17:30:09)

10. Aircraft Cabin Contour Dimensions

The aircraft is divided into two contour zones: CI and CII.

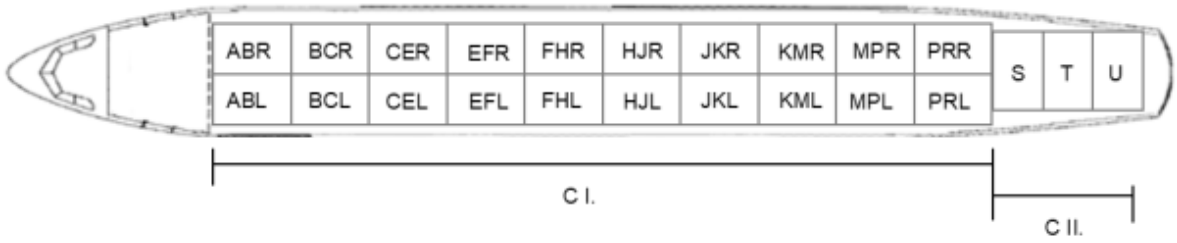

As an example, this drawing illustrates a cross-section of contour zone CI.

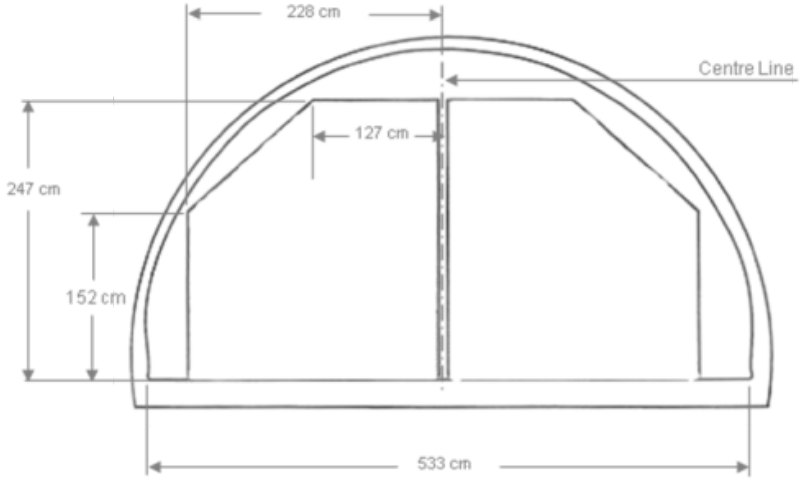

Note: All heights are given from top of rollers.

UNCONTROLLED DOCUMENT
UNCONTROLLED DOCUMENT

UNCONTROLLED DOCUMENT (03 DECEMBER 2024 17:30:09)

UNCONTROLLED DOCUMENT

10.1 Contour I

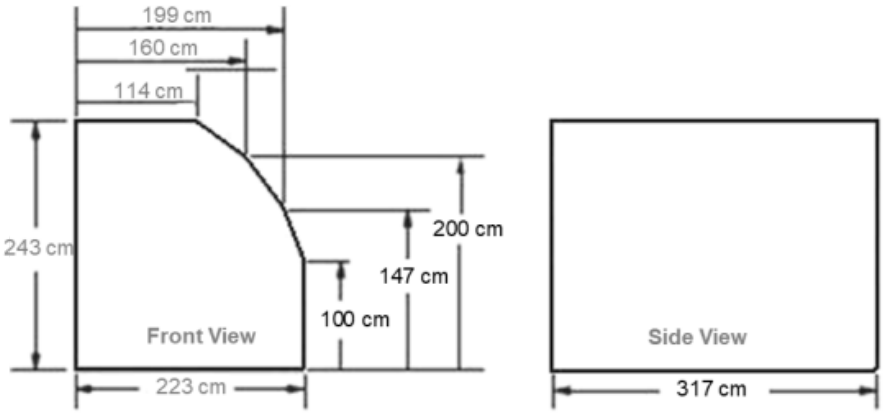

10.2 Contour II

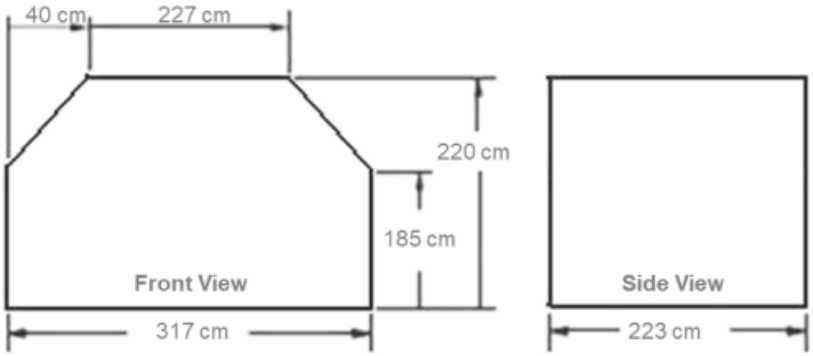

UNCONTROLLED DOCUMENT

UNCONTROLLED DOCUMENT (03 DECEMBER 2024 17:30:09)

UNCONTROLLED DOCUMENT

10.3 Centreline 125”/88” or 125”/96” Contours

Lateral 125”/88” (A thru P) or 125”/96” (AA thru MM)

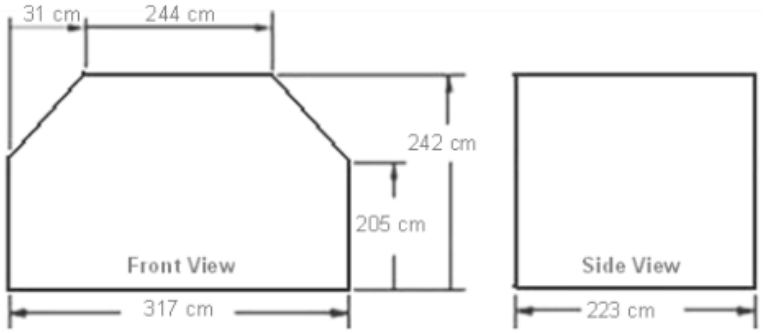

Lateral 125”/88” (R thru S) or 125”/96” (PP thru RR)

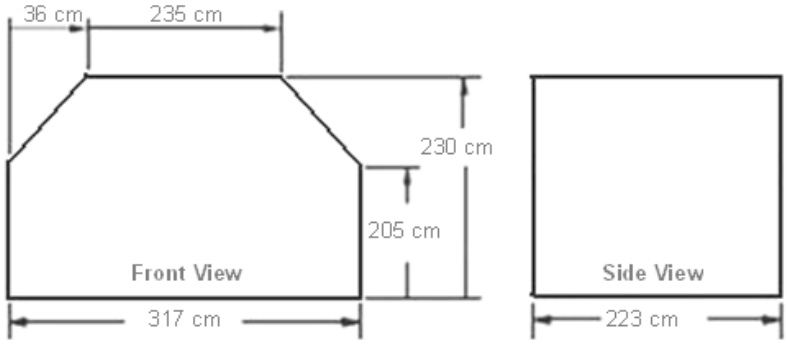

Longitudinal 125”/96” (AB thru MP):

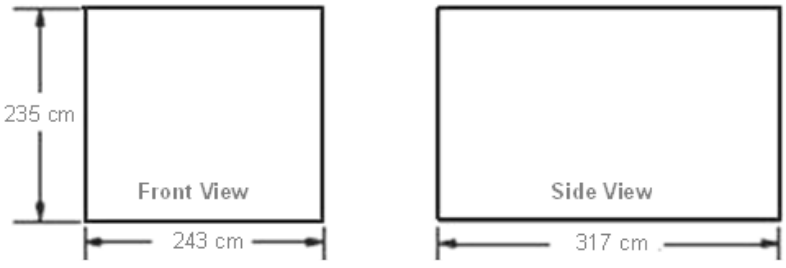

Note: AMJ loadable with sloped side facing left (towards door)

UNCONTROLLED DOCUMENT (03 DECEMBER 2024 17:30:09)

11. Maximum Position Weights

11.1 Maximum Main-deck ULD Weights

Max Gross Weights in Kilograms (kg):

	ULD Position and Max. Gross Weight (kg)															
ULD Config.	**ABL/R**	**BCL/R**	**CEL/R**	**EFL/R**	**FHL/R**	**HJL/R**	**JKL/R**	**KML/R**	**MPL/R**	**PRL/R**						
88" Twin	2000	2358	2400	3825	4321			2964	2756	2629						
96" Twin	2000	2358	2400	3825	4321			2964	2756							
ULD Config.	**A**	**B**	**C**	**D**	**E**	**F**	**G**	**H**	**J**	**K**	**L**	**M**	**P**	**R**	**S**	**T**	**U**
88" Lateral	2826	3126	3391		4687	6033				5945	5945		3725	3714		3059	2541
ULD Config.	**AA**	**BB**	**CC**	**DD**	**EE**	**FF**	**GG**	**HH**	**JJ**	**KK**	**LL**	**MM**	**PP**	**RR**	**SS**	**TT**	
96" Lateral	3080	3428	3696		5670					4822	4400	4091	4048		3389	2809	
ULD Config.	**AB**	**BC**	**CE**	**EF**	**FH**	**HJ**	**JK**	**KM**	**MP**								
96" Long.	3429	3941	4001	6804				4868	4445								
ULD Config.	**CFR**	**FJR**	**JLR**	**LPR**													
16ft. Long.	7729	10668		6236													
ULD Config.	**CFG**	**FJG**	**JLG**														
20ft. Long.	10602	11340															

Max Gross Weights in Pounds (lbs):

	ULD Position and Max. Gross Weight (lbs)															
ULD Config.	**ABL/R**	**BCL/R**	**CEL/R**	**EFL/R**	**FHL/R**	**HJL/R**	**JKL/R**	**KML/R**	**MPL/R**	**PRL/R**						
88" Twin	4409	5198	5291	8433	9526			6534	6076	5795						
96" Twin	4409	5198	5291	8433	9526			6534	6076							
ULD Config.	**A**	**B**	**C**	**D**	**E**	**F**	**G**	**H**	**J**	**K**	**L**	**M**	**P**	**R**	**S**	**T**	**U**
88" Lateral	6230	6885	7475		10333	13300				13106	8900		8212	8187		6743	5601
ULD Config.	**AA**	**BB**	**CC**	**DD**	**EE**	**FF**	**GG**	**HH**	**JJ**	**KK**	**LL**	**MM**	**PP**	**RR**	**SS**	**TT**	
96" Lateral	6790	7557	8148		12500					10630	9700	9019	8924		7471	6192	
ULD Config.	**AB**	**BC**	**CE**	**EF**	**FH**	**HJ**	**JK**	**KM**	**MP**								
96" Long.	7559	8688	8820	15000				10732	9799								
ULD Config.	**CFR**	**FJR**	**JLR**	**LPR**													
16ft. Long.	17039	23518		13748													
ULD Config.	**CFG**	**FJG**	**JLG**														
20ft. Long.	23373	25000															

Note: The max gross weight includes the tare weight of the ULDs, including nets or igloos.

UNCONTROLLED DOCUMENT (03 DECEMBER 2024 17:30:09)

11.2 Maximum Lower-deck Compartment Weights

11.2.1 Forward and Aft Lower Deck Compartments

Hold	position	ULD Max. Gross Weights in Kilograms (kg)			
		125"/88"	125"/96"	125"/60.4" (ALP)	61.5"/60.4" (AKE)
Forward	11 L/R - 23 L/R	4626	5103	3174	1587
	11P, 12P, 13P 21P,22P				
Aft	31 L/R - 43 L/R				
	31P, 32P 41P, 42P				

Note: The max gross weight includes the tare weight of the ULDs, including nets or igloos.

11.2.2 Bulk Hold

Bay/ Section	Maximum Capacity	
	Gross Weight (kg)	Volume (m3)
51	339	1.87
52	1413	7.87
53	1716	9.94
Total:	**3468**	**19.68**

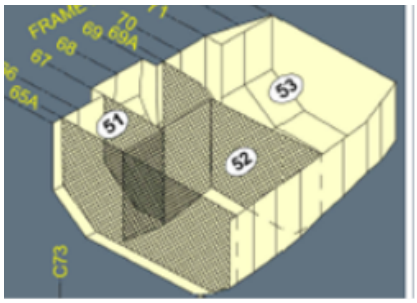

UNCONTROLLED DOCUMENT
UNCONTROLLED DOCUMENT

UNCONTROLLED DOCUMENT (03 DECEMBER 2024 17:30:09)

12. Aircraft ULD Compatibility

12.1 Main Deck Configurations

The loading combinations shown here are examples only. More combinations are possible. Full information covering possible loading combinations, and how they interact, can be found in the Sable system.

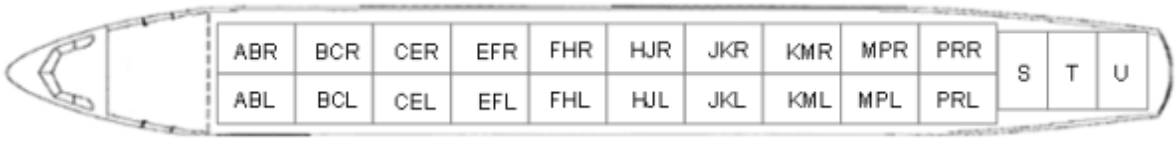

Configuration 1(Green): 20 Longitudinal Twin-track 125”/88” and 3 centre- line 125”/96” or 88” positions



Configuration 2(Green): 18 Longitudinal Twin-track 125”/96” and 4 centre- line 125”/96” or 88” positions



Configuration 3(Blue): 17 Lateral centre-line 125”/88” positions



Configuration 4(Yellow): 9 Longitudinal centre-line 125”/96” positions

UNCONTROLLED DOCUMENT
UNCONTROLLED DOCUMENT

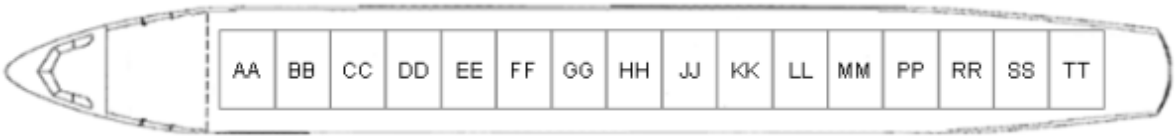

Configuration 5(Red): 16 Lateral centre-line 96”/125” positions



Configuration 6(Purple): 3 longitudinal centre-line 238.5” / 96” (20ft)



Configuration 7(Purple): 4 longitudinal centre-line 196” / 96” (16ft)

UNCONTROLLED DOCUMENT
UNCONTROLLED DOCUMENT

UNCONTROLLED DOCUMENT (03 DECEMBER 2024 17:30:09)

UNCONTROLLED DOCUMENT

12.2 Main Deck ULD Compatibility

The following ULD type loading restrictions apply for configurations A to C. The ULD type can be loaded on positions marked with a 'Y'. The ULD type cannot be loaded on positions marked with a 'N'.

		ULD Type												
	Pos	AAA	AAC/ LAY	AAJ/ LAK	AAX	AMF	AMJ	AMP	AMV	PAG	PMC	PGA	PRA	RAP
Configuration 1	ABL/R	N	Y	Y	Y	N	N	N	N	Y	N	N	N	N
	BCL/R	N	Y	Y	Y	N	N	N	N	Y	N	N	N	N
	CEL/R	N	Y	Y	Y	N	N	N	N	Y	N	N	N	N
	EFL/R	N	Y	Y	Y	N	N	N	N	Y	N	N	N	N
	FHL/R	N	Y	Y	Y	N	N	N	N	Y	N	N	N	N
	HJL/R	N	Y	Y	Y	N	N	N	N	Y	N	N	N	N
	JKL/R	N	Y	Y	Y	N	N	N	N	Y	N	N	N	N
	KML/R	N	Y	Y	Y	N	N	N	N	Y	N	N	N	N
	MPL/R	N	Y	Y	Y	N	N	N	N	Y	N	N	N	N
	PRL/R	N	Y	Y	Y	N	N	N	N	Y	N	N	N	N
	S	Y	Y	Y	N	N	N	N	N	Y	N	N	N	Y
	T	Y	Y	Y	N	N	N	N	N	Y	N	N	N	Y
	U	Y	Y	Y	N	N	N	N	N	Y	N	N	N	Y
Configuration 2	ABL/R	N	N	N	N	N	N	N	N	N	Y	N	N	N
	BCL/R	N	N	N	N	N	N	N	Y	N	Y	N	N	N
	CEL/R	N	N	N	N	N	N	N	Y	N	Y	N	N	N
	EFL/R	N	N	N	N	N	N	N	Y	N	Y	N	N	N
	FHL/R	N	N	N	N	N	N	N	Y	N	Y	N	N	N
	HJL/R	N	N	N	N	N	N	N	Y	N	Y	N	N	N
	JKL/R	N	N	N	N	N	N	N	Y	N	Y	N	N	N
	KML/R	N	N	N	N	N	N	N	Y	N	Y	N	N	N
	MPL/R	N	N	N	N	N	N	N	Y1	N	Y	N	N	N
	PP	N	N	N	N	N	N	N	N	N	Y	N	N	N
	RR	N	N	N	N	N	N	N	N	N	Y	N	N	N
	SS	N	N	N	N	N	N	N	N	N	Y	N	N	N
	TT	N	N	N	N	N	N	N	N	N	Y	N	N	N
Configuration 3	A	Y	Y	Y	N	N	N	N	N	Y	N	N	N	Y2
	B	Y	Y	Y	N	N	N	N	N	Y	N	N	N	Y2
	C	Y	Y	Y	N	N	N	N	N	Y	N	N	N	Y
	D	Y	Y	Y	N	N	N	N	N	Y	N	N	N	Y
	E	Y	Y	Y	N	N	N	N	N	Y	N	N	N	Y
	F	Y	Y	Y	N	N	N	N	N	Y	N	N	N	Y
	G	Y	Y	Y	N	N	N	N	N	Y	N	N	N	Y
	H	Y	Y	Y	N	N	N	N	N	Y	N	N	N	Y
	J	Y	Y	Y	N	N	N	N	N	Y	N	N	N	Y
	K	Y	Y	Y	N	N	N	N	N	Y	N	N	N	Y
	L	Y	Y	Y	N	N	N	N	N	Y	N	N	N	Y
	M	Y	Y	Y	N	N	N	N	N	Y	N	N	N	Y
	P	Y	Y	Y	N	N	N	N	N	Y	N	N	N	Y
	R	Y	Y	Y	N	N	N	N	N	Y	N	N	N	Y
	S	Y	Y	Y	N	N	N	N	N	Y	N	N	N	Y
	T	Y	Y	Y	N	N	N	N	N	Y	N	N	N	Y
	U	Y	Y	Y	N	N	N	N	N	Y	N	N	N	Y

Y1: AMV not allowed on position MPL

Y2: Active RAP not allowed

UNCONTROLLED DOCUMENT (03 DECEMBER 2024 17:30:09)

The following ULD type loading restrictions apply for configurations A to C. The ULD type can be loaded on positions marked with a 'Y'. The ULD type cannot be loaded on positions marked with a 'N'.

		ULD Type														
	Pos	AAA	AAC/ LAY	AAJ/ LAK	AAX	AMF	AMJ	AMP	AMV	AMP	AMX	PAG	PMC	PGA	PRA	RAP
Configuration 4	AB	N	N	N	N	N	Y3	N	N	N	N	N	Y	N	N	N
	BC	N	N	N	N	N	Y3	N	N	N	N	N	Y	N	N	N
	CE	N	N	N	N	N	Y3	N	N	N	N	N	Y	N	N	N
	EF	N	N	N	N	N	Y3	N	N	N	N	N	Y	N	N	N
	FH	N	N	N	N	N	Y3	N	N	N	N	N	Y	N	N	N
	HJ	N	N	N	N	N	Y3	N	N	N	N	N	Y	N	N	N
	JK	N	N	N	N	N	Y3	N	N	N	N	N	Y	N	N	N
	KM	N	N	N	N	N	Y3	N	N	N	N	N	Y	N	N	N
	MP	N	N	N	N	N	Y3	N	N	N	N	N	Y	N	N	N
Configuration 5	AA	N	N	N	N	Y	N	N	N	Y	N	N	Y	N	N	N
	BB	N	N	N	N	Y	N	N	N	Y	N	N	Y	N	N	N
	CC	N	N	N	N	Y	N	N	N	Y	N	N	Y	N	N	N
	DD	N	N	N	N	Y	N	N	N	Y	N	N	Y	N	N	N
	EE	N	N	N	N	Y	N	N	N	Y	N	N	Y	N	N	N
	FF	N	N	N	N	Y	N	N	N	Y	N	N	Y	N	N	N
	GG	N	N	N	N	Y	N	N	N	Y	N	N	Y	N	N	N
	HH	N	N	N	N	Y	N	N	N	Y	N	N	Y	N	N	N
	JJ	N	N	N	N	Y	N	N	N	Y	N	N	Y	N	N	N
	KK	N	N	N	N	Y	N	N	N	Y	N	N	Y	N	N	N
	LL	N	N	N	N	Y	N	N	N	Y	N	N	Y	N	N	N
	MM	N	N	N	N	Y	N	N	N	Y	N	N	Y	N	N	N
	PP	N	N	N	N	N	N	N	N	Y	N	N	Y	N	N	N
	RR	N	N	N	N	N	N	N	N	Y	N	N	Y	N	N	N
	SS	N	N	N	N	N	N	N	N	Y	N	N	Y	N	N	N
	TT	N	N	N	N	N	N	N	N	Y	N	N	Y	N	N	N
Config. 6	CFG	N	N	N	N	N	N	N	N	N	N	N	N	Y	N	N
	FJG	N	N	N	N	N	N	N	N	N	N	N	N	Y	N	N
	JLG	N	N	N	N	N	N	N	N	N	N	N	N	Y	N	N
Config. 7	CFR	N	N	N	N	N	N	N	N	N	N	N	N	N	Y	N
	FJR	N	N	N	N	N	N	N	N	N	N	N	N	N	Y	N
	JLR	N	N	N	N	N	N	N	N	N	N	N	N	N	Y	N
	LPR	N	N	N	N	N	N	N	N	N	N	N	N	N	Y	N

Y3: AMJ must be loaded with sloped side facing left (towards door)

Note: The loading of two 96" pallet stacks side-by-side in twin-track configuration shall be avoided. The planning of 96" pallet stacks in twin-track configuration that requires the pallet stacks to pass each other whilst loading or unloading shall be avoided. This is due to the lack of separation clearance between the pallet stacks when passing by each other, causing the pallet sets to become entangled.

UNCONTROLLED DOCUMENT
UNCONTROLLED DOCUMENT

UNCONTROLLED DOCUMENT (03 DECEMBER 2024 17:30:09)

12.3 Lower Deck Configurations

12.3.1 Forward Hold

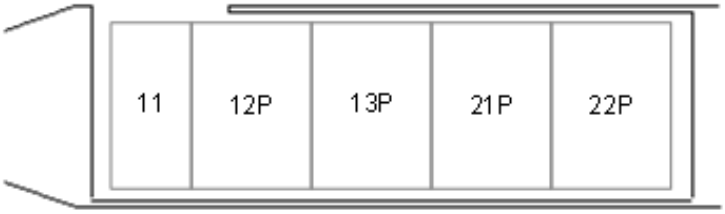

Configuration 1: 4 x 125”/88” or 96” and 1 x 60.4”/125” positions

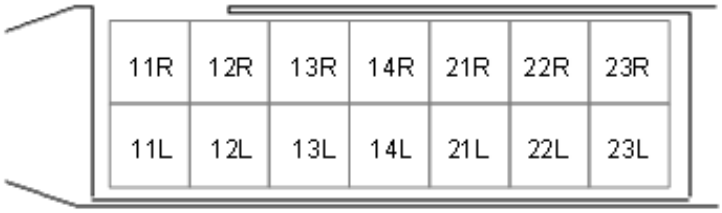

Configuration 2: 7 x Lateral 125”/60.4” or 14 Twin-track 61.5”/60.4” positions

12.3.2 Aft Hold



Configuration 1: 4 x Lateral 125”x88” or 96” positions

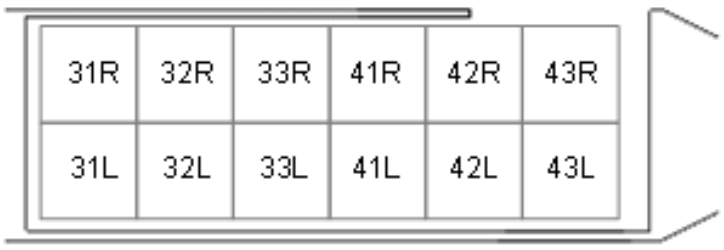

Configuration 2: 6 x Lateral 125”/60.4” or 12 Twin-track 61.5”/60.4” positions

UNCONTROLLED DOCUMENT
UNCONTROLLED DOCUMENT

UNCONTROLLED DOCUMENT (03 DECEMBER 2024 17:30:09)

UNCONTROLLED DOCUMENT

12.4 Lower Deck ULD Compatibility

The following ULD type loading restrictions apply. The ULD type can be loaded on positions marked with a 'Y'. The ULD type cannot be loaded on positions marked with a 'N'.

		ULD Type					
	Pos	AAF	AAJ/ LAK	RAP	PAG	AKE	ALP
FWD 125"/88" or 96"	11	N	N	N	N	N	Y
	12P	Y	Y	Y	Y	N	N
	13P	Y	Y	Y	Y	N	N
	21P	Y	Y	Y	Y	N	N
	22P	Y	Y	Y	Y	N	N
FWD 125"/60.4"	11	N	N	N	N	N	Y
	12	N	N	N	N	N	Y
	13	N	N	N	N	N	Y
	21	N	N	N	N	N	Y
	22	N	N	N	N	N	Y
	23	N	N	N	N	N	Y
FWD 61.5"/60.4"	11R/L	N	N	N	N	Y	N
	12R/L	N	N	N	N	Y	N
	13R/L	N	N	N	N	Y	N
	21R/L	N	N	N	N	Y	N
	22R/L	N	N	N	N	Y	N
	23R/L	N	N	N	N	Y	N
AFT 125"/88" or 96"	31	Y	Y	Y	Y	N	N
	32	Y	Y	Y	Y	N	N
	41	Y	Y	Y	Y	N	N
	42	Y	Y	Y	Y	N	N
AFT 61.5"/60.4"	31R/L	N	N	N	N	Y	N
	32R/L	N	N	N	N	Y	N
	33R/L	N	N	N	N	Y	N
	41R/L	N	N	N	N	Y	N
	42R/L	N	N	N	N	Y	N
	43R/L	N	N	N	N	Y	N
AFT 125"/60.4"	31	N	N	N	N	N	Y
	32	N	N	N	N	N	Y
	33	N	N	N	N	N	Y
	41	N	N	N	N	N	Y
	42	N	N	N	N	N	Y
	43	N	N	N	N	N	Y

Note: All ALP ULDs must be inspected to ensure the base-plate is flat, to prevent the ULDs from jumping the locks. ULDs with a bent base-plate will not be sufficiently restrained.

Whenever possible in the Aft Hold, a full complement of either ALP or AKE ULDs should be carried. If this is not possible, load the aft hold from position 43L/43R and forward.

UNCONTROLLED DOCUMENT (03 DECEMBER 2024 17:30:09)

13. Loading and Un-Loading

13.1 Cargo Loading System (CLS)

The aircraft is equipped with Lower-deck PDUs, controlled by a joystick located in the doorway of the FWD and AFT holds, and may be used for both lateral and longitudinal movement of ULDs.

Only suitably trained staff may use the CLS.

13.2 Un-Loading Sequence

Step 1: Un-load the aft lower deck.

Step 2: Un-load the ULDs on the main deck in the following numbered sequence and respect the standard stage un-loading method.

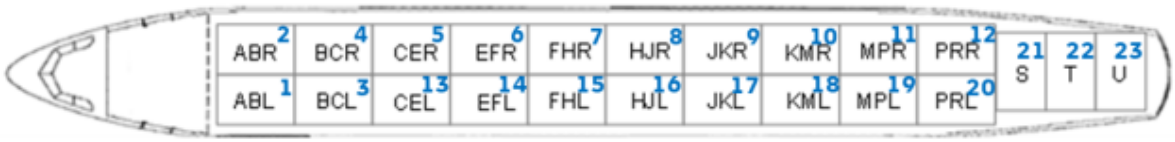

Step 3: Un-load the forward lower deck.

UNCONTROLLED DOCUMENT
UNCONTROLLED DOCUMENT

UNCONTROLLED DOCUMENT (03 DECEMBER 2024 17:30:09)

13.3 Loading Sequence

Step 1: Load the forward lower deck.

Step 2: Load the ULDs on the main deck in the following step sequence, and respect standard stage loading method.

a. Follow the numbered sequence temporarily loading position PRL and MPL onto positions FHL and EFL.



b. Move PRL and MPL into final positions.



c. Load the remaining ULDs in the following numbered sequence

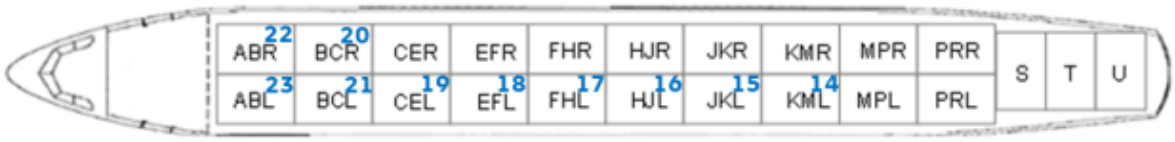

Step 3: Load the aft lower deck.

13.4 Loading Notes

13.4.1 Ground Stability

The A330-243 Freighter is a stable aircraft, and it is possible to load and/or un-load more than one deck at the same time. Keep in mind that all loads aft of position H create an aft moment.

UNCONTROLLED DOCUMENT
UNCONTROLLED DOCUMENT

UNCONTROLLED DOCUMENT (03 DECEMBER 2024 17:30:09)

14. Rigid, Oversized and Special Loads

For guidance on the handling of special loads, please refer to the Special Loads Regional Contact Instructions outlined in Chapter 6 **6.12.22.3 - Determining Loadability of Special Loads**. Where direct operator approval is required, the Regional Airside Team will liaise with Global Airside as needed.

14.1 Floating / Heavy Pallets

ULDs which are heavier than the standard allowed maximum gross weight may be loaded on the main deck as center load.

Permission must be sought from MNG before accepting any ULDs which require loading on a floating position.

The permission, including a special loading instruction, will be granted only after all details concerning the load and the loading have been checked and clarified.

14.2 Crushable Cargo Requirements

Compressible cargo must always be loaded forward of any other cargo on the Main-deck.

Where Rigid Cargo has been identified, the following positions shall be loaded with Crushable Cargo ULDs suitable for protecting the barrier wall against unrestrained Rigid Cargo.

Configuration	Positions with ULDs with crushable cargo suitable for protecting the barrier wall
Twin track 125/88	ABR/ABL
Twin track 125/96	ABR/ABL
Lateral Center Line 88/125	A
Lateral Center Line 96/125	AA
Longitudinal Center Line 125/96	AB

For mixed centreline and twin-track loading, either positions ABL and ABR must be loaded with Crushable cargo ULDs, or the first set of twin-track ULDs must be strapped and restrained to 9G.

14.3 Piercing Cargo

Piercing cargo may not be loaded on the first and last loaded position on the aircraft.

UNCONTROLLED DOCUMENT
UNCONTROLLED DOCUMENT

UNCONTROLLED DOCUMENT (03 DECEMBER 2024 17:30:09)

UNCONTROLLED DOCUMENT

14.4 Aircraft Engines

The following aircraft engines are loadable on the A330-243 Freighter.

Engine Type	Loaded on	Allowed Loading Positions	Loading direction
BR710 BR715 CFM56-2	96” Pallet	Main deck centre-line configuration 3 Check height and observe overlap	Not important
CFM56-3 CFM56-5 CFM56-7 V2500			
JT3 JT8 complete			
JT8 Partially assembled (without thrust reverser)		Main deck	
		12P, 13P, 21P and 22P	Load through the hold door with the exhaust (aft end) of the engine first

14.5 Live Animals

14.5.1 Horses

Max. Number of Horses per Aircraft	45
Max. Number of Horses per Box	3
Max. number of Horses per Groom	MNG require a suitable number of grooms to be onboard during flight, depending on the number of horses carried.
Approved Horse Transport ULDs	MNG approved horse boxes are allowed. Foreign equipment by be used, provided it is IATA approved, leak-proof and covered, i.e. HMJ or equivalent.
Approved Loading Configurations	125”/96” Lateral (Configuration 4)

UNCONTROLLED DOCUMENT

UNCONTROLLED DOCUMENT

UNCONTROLLED DOCUMENT (03 DECEMBER 2024 17:30:09)

UNCONTROLLED DOCUMENT

14.5.2 Other Live Animals

The following table provides a list of commonly transported animals. If there is a requirement to transport animals not listed below, contact your Special Loads Regional Contact.

	Main-Deck	FWD Hold	AFT Hold	Compt. 5
Horses	Yes (max 45 horses)	No		
Day-old chickens	Yes			
Monkeys				
Pigs				
Cattle				
Sheep or Goats				
Dogs or Cats				
Small mammals or Birds	Yes	No	No	No
Tropical Fish				
Reptiles or Amphibians				
Eels				
Crustaceans or Molluscs				
Bees				
Hatching eggs				

UNCONTROLLED DOCUMENT

UNCONTROLLED DOCUMENT

UNCONTROLLED DOCUMENT (03 DECEMBER 2024 17:30:10)

15. Restricted Commodities Loading

15.1 Radioactive (RRY), Magnetised (MAG) and Cargo Aircraft Only (CAO)

The following Dangerous Good type loading restrictions apply. The Dangerous Good type can be loaded on positions marked with a 'Y'. The Dangerous Good type cannot be loaded on positions marked with a 'N'.

DG Type	Position													
	Main-deck											Lower-deck		
	AB L/R	BC L/R	CE L/R	EF L/R	FH L/R	HJ L/R	JK L/R	KM L/R	MP L/R	PR L/R	S-U	FWD	AFT	Bulk
MAG	N	N	N	N	N	N	Y	Y	Y	Y	Y	N	Y	N
CAO	Y	Y	Y	Y	Y	Y	Y	Y	Y	Y	N	Y	Y	Y
RRY (max. 50 TI combined)	N	N	Y	Y	Y	Y	Y	Y	Y	Y	Y	N	Y	N
RRY (max. 200 TI combined)	N	N	N	N	Y	Y	Y	Y	Y	Y	Y	N	Y	N

Note: Cargo Aircraft Only (CAO) can be loaded on any Main Deck position ABL to JKL provided they are loaded accessible. Accessible means that:

- The CAO is loaded on a pallet.
- All twin-track positions forward of the CAO are loaded with 88" ULDs or 96" pallets with 25cm (10") aisle.

15.2 Dry Ice

Please see the Global Supplementary Operational Document **Dry Ice Consolidation table** for the current maximum allowed Dry Ice limits.

15.3 Dry Ice (ICE) and Live Animals (AVI)

There is no additional weight limit for the loading of Dry Ice (ICE) together with Live Animals (AVI) on the Main-deck of the A330-243 Freighter.

Loading AVI to Lower deck compartments **is not allowed.**

15.4 Lithium Batteries

Please see the Global Supplementary Operational Document **Lithium Battery Loadability Consolidation Table** for the current UN3480 Section IA/IB (RBI), UN3090 Section IA/IB (RBM), UN3481 Section I (RLI), UN3091 Section I (RLM) load ability limits.

UNCONTROLLED DOCUMENT
UNCONTROLLED DOCUMENT

16. Messaging and Reporting

16.1 Messaging

Standard messaging rules apply.

16.2 Reporting

Standard reporting rules apply.

UNCONTROLLED DOCUMENT
UNCONTROLLED DOCUMENT

UNCONTROLLED DOCUMENT (03 DECEMBER 2024 17:30:10)

UNCONTROLLED DOCUMENT

17. Load Control Data

17.1 Standard Mass Additions

17.1.1 Additional Crew Members (ACM)

Maximum Number of ACMs:	8
Mass of ACM:	100 kg

17.1.2 Fly Away Kit (FAK) and Ballast

FAK: Included in DOW/DOI.

Ballast is not carried as standard on this aircraft.

17.2 Minimum Fuel and Standard Taxi Fuel

Remaining Fuel:	5800 kg
Standard Taxi Fuel:	600 kg

17.3 LMC Restrictions

Maximum SABLE Load Sheet LMC:	+/- 2500 kg
Maximum Manual Load Sheet LMC:	+/- 2500 kg

UNCONTROLLED DOCUMENT

UNCONTROLLED DOCUMENT

UNCONTROLLED DOCUMENT (03 DECEMBER 2024 17:30:10)

18. Maximum Package Dimensions

18.1 Main Cargo Door

18.1.1 Straight loading

The maximum cubic dimensions of packages which can be straight-loaded through the main-deck cargo door are defined below.

Package height(1)		MAX package length	
(in)	(m)	(in)	(m)
42	1.07	188	4.78
48	1.22	185	4.70
54	1.37	179	4.55
60	1.52	172	4.37
66	1.68	163	4.14
72	1.83	153	3.89
78	1.98	141	3.58
84	2.13	128	3.25
90	2.29	109	2.77
96	2.44	91	2.31
MAX package width(2) = 132.77 in (3.372 m)			

(1)The height is measured from the top of the rollers of the CLS.

18.1.2 Swivel / Diagonal Loading

The maximum cubic dimensions of packages which can be loaded onto the aircraft by swivelling through the main-deck cargo door are defined below.

Note that if the package dimensions exceed the limits given in the below table, loading may still be possible and shall be considered on a case-by-case basis.

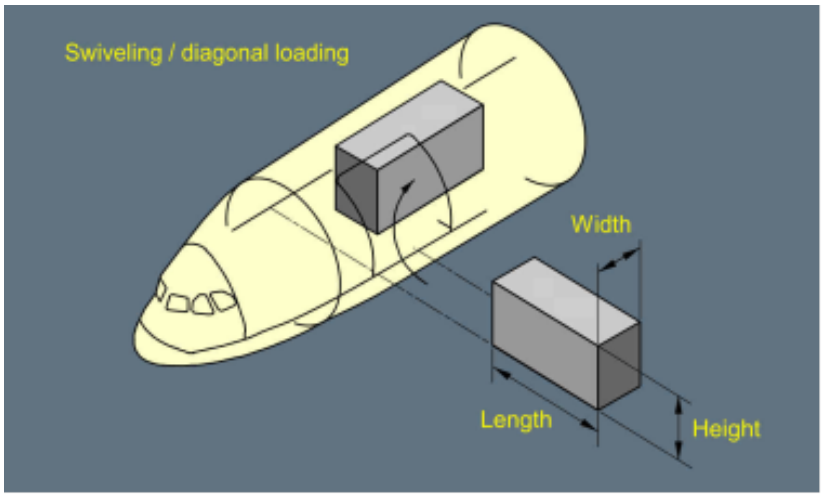

UNCONTROLLED DOCUMENT
UNCONTROLLED DOCUMENT

UNCONTROLLED DOCUMENT (03 DECEMBER 2024 17:30:10)

METRIC UNITS

PACKAGE WIDTH (m)	PACKAGE HEIGHT[1] (m)									
	1.07	1.22	1.37	1.52	1.68	1.83	1.98	2.13	2.29	2.44
	MAX LENGTH (m)									
0.15	29.64	28.83	25.35	21.94	19.02	16.38	13.97	11.99	9.88	8.30
0.30	24.46	23.19	20.85	18.46	16.31	14.30	12.40	10.80	9.02	7.67
0.46	20.29	19.40	17.73	15.95	14.30	12.70	11.15	9.80	8.30	7.11
0.61	17.37	16.71	15.42	14.05	12.72	11.43	10.16	9.02	7.70	6.65
0.76	15.19	14.68	13.66	12.55	11.48	10.41	9.32	8.33	7.16	6.22
0.91	13.49	13.08	12.27	11.35	10.46	9.55	8.61	7.75	6.70	5.87
1.07	12.14	11.81	11.15	10.36	9.60	8.84	8.00	7.24	6.32	5.54
1.22	11.05	10.77	10.21	9.55	8.89	8.20	7.49	6.81	5.97	5.23
1.37	10.16	9.91	9.42	8.86	8.28	7.67	7.04	6.43	5.64	4.98
1.52	9.37	9.17	8.76	8.26	7.75	7.21	6.63	6.07	5.36	4.75
1.68	8.74	8.53	8.18	7.75	7.29	6.81	6.30	5.76	5.10	4.52
1.83	8.15	8.00	7.67	7.29	6.88	6.45	5.97	5.51	4.88	4.34
1.98	7.67	7.52	7.24	6.91	6.53	6.15	5.69	5.26	4.67	
2.13	7.24	7.11	6.86	6.55	6.22	5.87	5.46	5.05	4.50	
2.29	6.86	6.73	6.50	6.22	5.94	5.61	5.23	4.85		
2.44	6.53	6.43	6.20	5.94	5.69	5.38	5.03			
2.59	6.22	6.12	5.94	5.72	5.46					
2.74	5.94	5.87								

[1] *The height is measured from the top of the rollers of the CLS.*

UNCONTROLLED DOCUMENT
UNCONTROLLED DOCUMENT

UNCONTROLLED DOCUMENT (03 DECEMBER 2024 17:30:10)