UNCONTROLLED DOCUMENT

UNCONTROLLED DOCUMENT

MNB A333P2F
MNG Cargo A330-300P2F

Revision: 3
Date: 28 November 2024

1 MNG Airlines A330-343P2F Registrations
2 Aircraft Dimensions
3 Aircraft Servicing Points and Specifications
4 Ground Support Equipment
5 Standard Turnaround Times
6 Safety Areas
7 Strong Wind Conditions
8 Aircraft Door Dimensions
9 Compartment Classification and Air-Conditioning
10 Aircraft Cabin Contour Dimensions
11 Maximum Position Weights
12 Aircraft ULD Compatibility
13 Loading and Un-Loading
14 Rigid, Oversized and Special Loads
15 Restricted Commodities Loading
16 Messaging
17 Reporting
18 Load Control Data
19 Maximum Package Dimensions Main deck

UNCONTROLLED DOCUMENT (28 NOVEMBER 2024 16:05:24)

Page	Date	Comment
34	28 November 2024	Global Airside replaced with Special Loads Regional contact. *(Minor)*

UNCONTROLLED DOCUMENT

UNCONTROLLED DOCUMENT

1. MNG Airlines A330-343P2F Registrations

IATA Designator:	**MB**
ICAO Designator:	**MNB**
Valid for:	**TCMCM, TCMCN, TCMCO**

UNCONTROLLED DOCUMENT
UNCONTROLLED DOCUMENT

2. Aircraft Dimensions

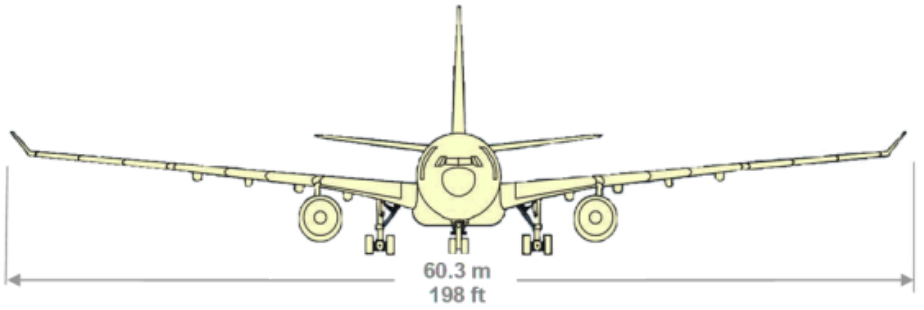

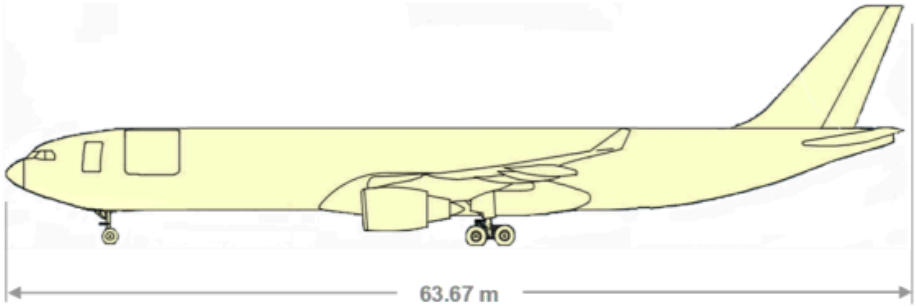

UNCONTROLLED DOCUMENT
UNCONTROLLED DOCUMENT

UNCONTROLLED DOCUMENT (28 NOVEMBER 2024 16:05:24)

UNCONTROLLED DOCUMENT

3. Aircraft Servicing Points and Specifications

3.1 Servicing Points

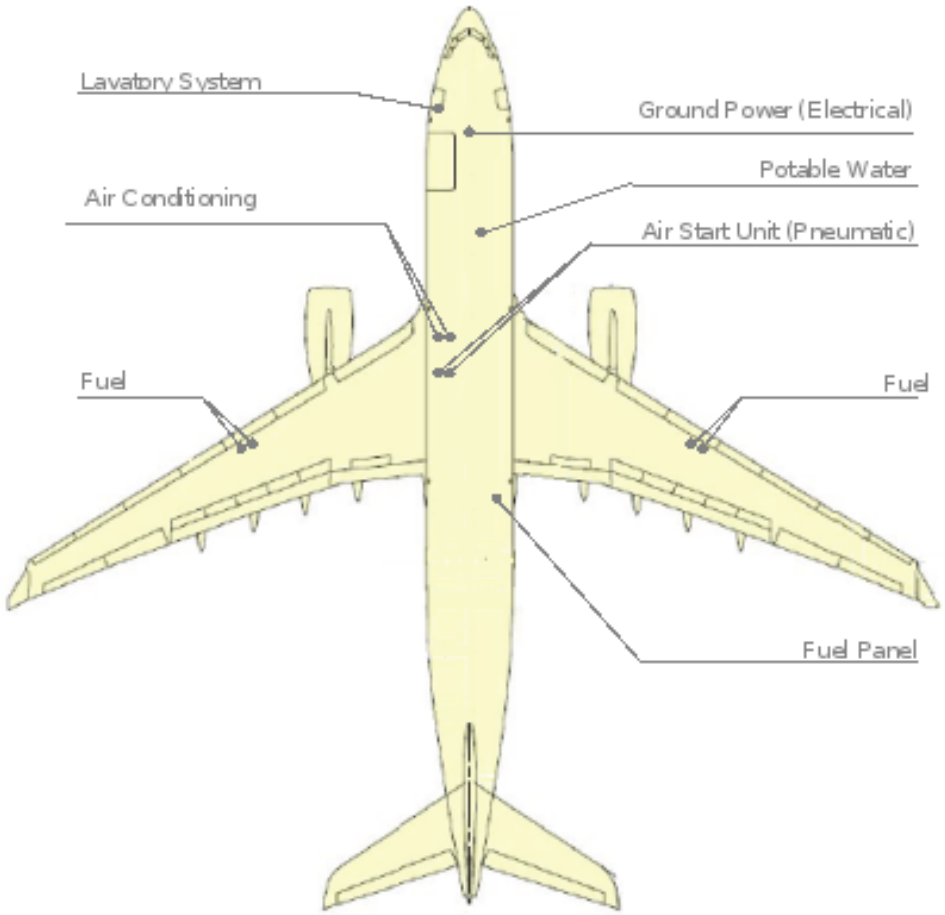

System		Distance				Nominal Height from Ground	
		AFT of Nose		From A/C Centreline			
		Meter	Feet	Meter	Feet	Meter	Feet
Air Conditioning	High Pressure	21,0	68,9	0,8	2,6	1,9	6,2
	Low Pressure	19,3	63,3	0,3	1	2,1	6,9
				0,8	2,6		
Ground Power (Electrical)		7,20	23,6	0		2,3	7,5
Fuel		26,8 L/R	L/R	12,6 L/R	41,3 L/R	5,1	16,7
Fuel Panel		31,1	102	0,8 R	2,6 R	1,9	6,2
Lavatory System	Service Panel 1	5,5	18	1,4 L	4,7 L	3	9,8
	Service Panel 2	6	19,7	1,7 L	5,5 L	3,2	10,5
Air Starter Unit (Pneumatic)	High Pressure	20,7	67,9	0,8 L	2,6	2	6,6
		21,1	69,2			1,9	6,2
	Low Pressure	19,3	63,3	0,3	1	2,1	6,9
				0,8	2,6	2,1	6,9

UNCONTROLLED DOCUMENT (28 NOVEMBER 2024 16:05:24)

UNCONTROLLED DOCUMENT

3.2 Servicing Specifications

System	Requirements		Remark
Air Conditioning	Maximum Flow Rate Maximum Output Pressure	3,2 kg/sec 70 mbar	2 x 8 in. AS4262 ´type B´ connection
Ground Power (Electrical)	Type Power Requirement	3 Phase, 115 V, 400 Hz 2 x 90 kVA	AC outlets: ´HUBBELL 5258´ DC outlets: ´HUBBELL 7472´
Fuel	JET A1		max. pressure: 50 Psi / 3,5 Bar max. suction: 11 Psi / 0,8 Bar
Potable Water*	Total Capacity	18L / 4,76 US Gal manual filling only*	No external access point available.
Lavatory System	Total Waste Capacity Maximum Delivery Pressure Recommended Flow Rate Chemical Fluid	35 L 2.4 bar 38 L/min 9,5 L	1st panel: ´Roylyn´ 1 Inch: for flushing & filling 2nd panel: ´Taco´ 4 Inch: for draining. For lavatory service under severe heat conditions, please refer to C109.4.
Air Starter Unit (Pneumatic)	Minimum Capacity (*) Capacity Range to idle in 90s, Airflow (kg/min) / Air Supply Pressure (PSIA) / Air Supply Temperature (°C)	85/45/220-112/48/85*	High Pressure: 2 x 3 Inch ISO 2026 connections

UNCONTROLLED DOCUMENT

UNCONTROLLED DOCUMENT

UNCONTROLLED DOCUMENT (28 NOVEMBER 2024 16:05:24)

UNCONTROLLED DOCUMENT

4. Ground Support Equipment

4.1 Positioning of GSE

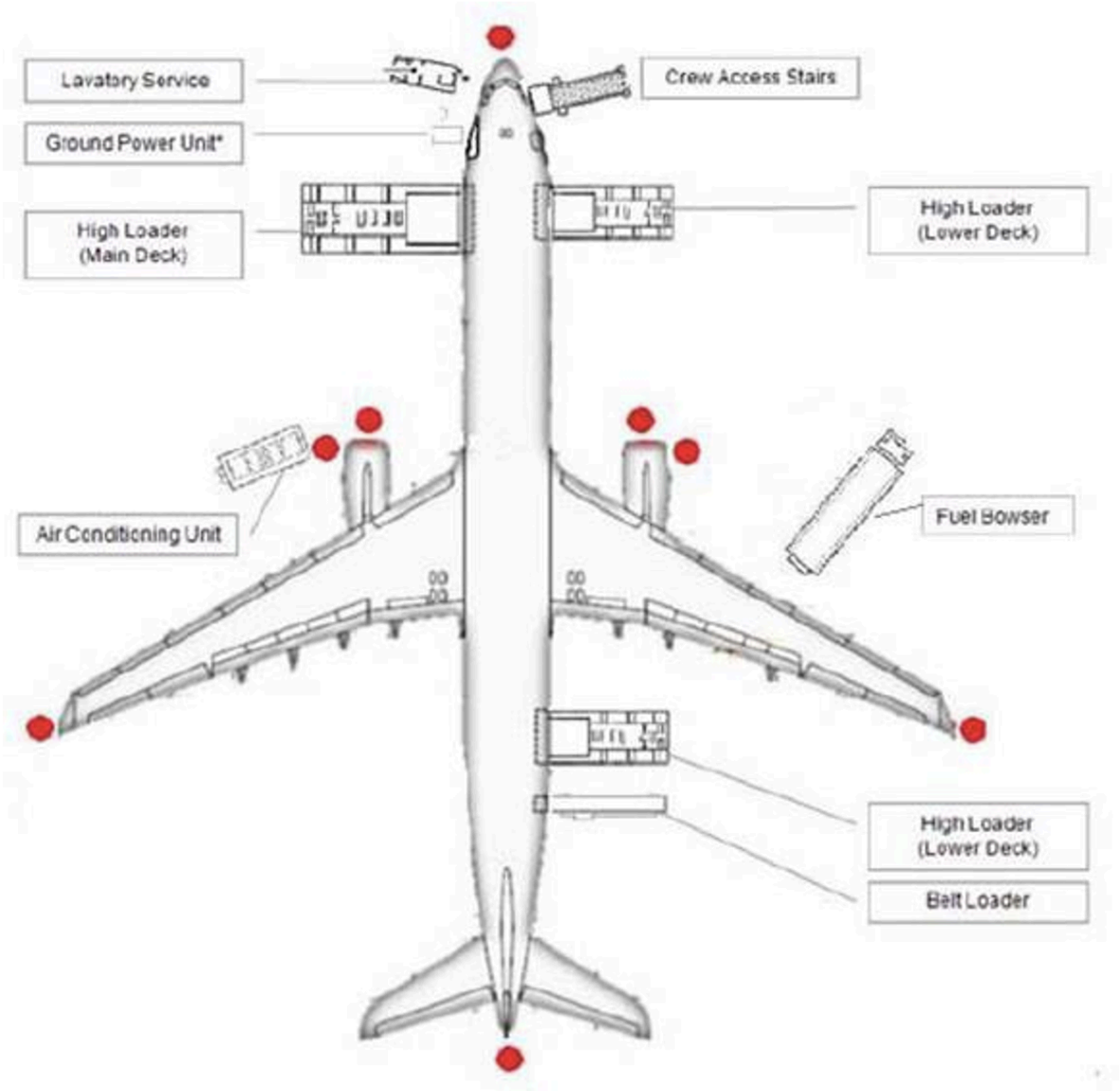

GPU Connection Point A

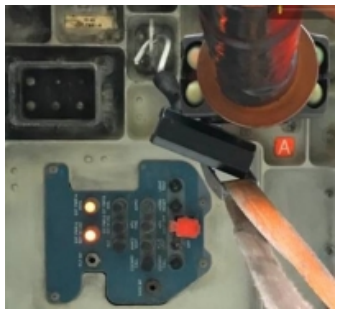

*Note:

The A330 has two GPU connection sockets: A & B.
If the GPU being used has only one connection cable, then socket A shall be used (see photograph).
If the GPU being used has two connection cables then both A and B shall be used: first A, then B.

UNCONTROLLED DOCUMENT (28 NOVEMBER 2024 16:05:24)

UNCONTROLLED DOCUMENT

4.2 GSE Requirements

GSE	Type	Quantity
High Loader	Main-deck Standard	1 2
Crew stairs*	Platform height 4.62 – 4.67 meters	1
Ground Power Unit	Diesel, Electric or Ground-powered	1
Belt Loader	Standard (9 meter recommended)	1
Tractor	N/A	6
Dolly Wagon Main-deck	125”/88” and 125”/96” capable	Up to 26
Dolly Wagon Lower-deck	125”/88” and 125”/96” capable	Up to 11
	60.4”/61.5” or 60.4/125” capable	Up to 32
Belly Container / Wagon	As required	According to load

UNCONTROLLED DOCUMENT

UNCONTROLLED DOCUMENT

UNCONTROLLED DOCUMENT (28 NOVEMBER 2024 16:05:24)

UNCONTROLLED DOCUMENT

5. Standard Turnaround Times

Turn-around time for a transit stop:	01:35 hours
Turn-around time for an end stop:	01:45 hours

UNCONTROLLED DOCUMENT

UNCONTROLLED DOCUMENT

UNCONTROLLED DOCUMENT (28 NOVEMBER 2024 16:05:24)

6. Safety Areas

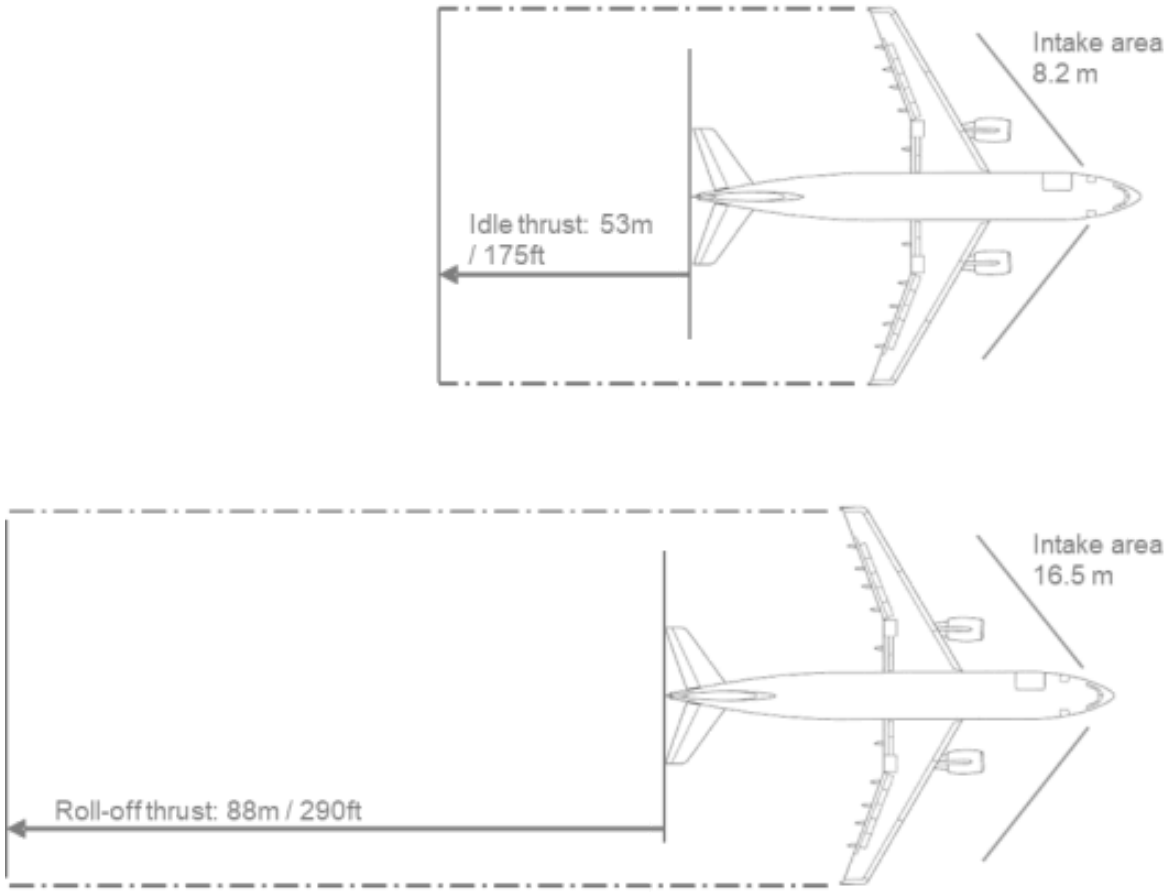

UNCONTROLLED DOCUMENT
UNCONTROLLED DOCUMENT

UNCONTROLLED DOCUMENT (28 NOVEMBER 2024 16:05:24)

UNCONTROLLED DOCUMENT

7. Strong Wind Conditions

If the wind conditions on the ramp reach the following speeds, the corresponding actions shall be taken regardless of the angle of the wind.



Wind Speed	Action
Up to 40 knots	Normal Operations: All doors can be opened and left open.
More than 40 knots	Do not open additional doors.
More than 40 knots	All open doors shall be closed immediately

Doors shall remain closed until wind speed has decreased below the 40-knot threshold.

UNCONTROLLED DOCUMENT

UNCONTROLLED DOCUMENT

UNCONTROLLED DOCUMENT (28 NOVEMBER 2024 16:05:24)

8. Aircraft Door Dimensions

8.1 Cabin Door

During opening and closing, the doors swing approximately 75cm out of the aircraft.

Maximum Door Sill Height: 5 m / 16,4 ft

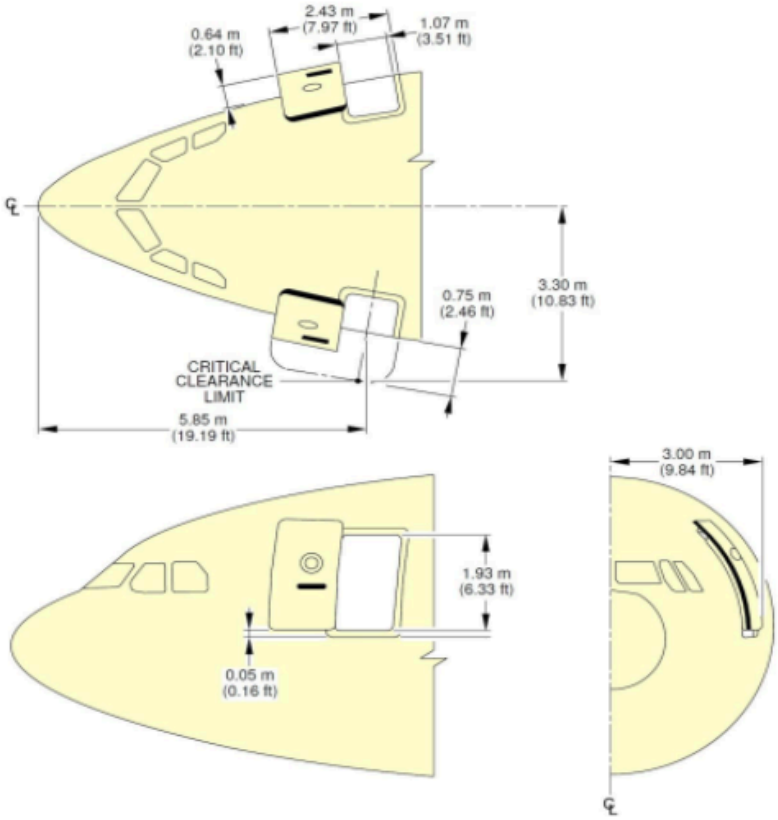

UNCONTROLLED DOCUMENT
UNCONTROLLED DOCUMENT

UNCONTROLLED DOCUMENT (28 NOVEMBER 2024 16:05:24)

UNCONTROLLED DOCUMENT

UNCONTROLLED DOCUMENT

8.2 Main Deck Cargo Door

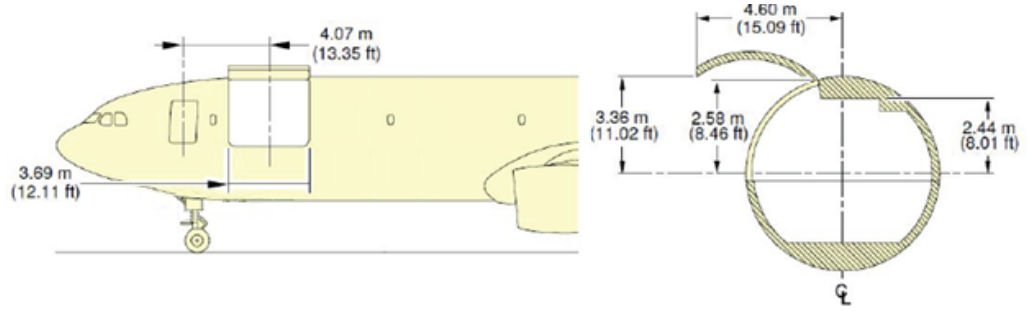

Do not operate the main-deck cargo door while the red warning light is on.

The dimensions of the Main-deck cargo doors is 3.581 M wide and 2.561 M high

When the warning light is on, residual pressure in the aircraft can cause the door to open with sudden force. This can cause injury to persons and/or damage to the aircraft.

8.3 Forward Lower deck Door

During opening and closing of the forward and aft hold doors, the door swings down below door-sill level.

Maximum Door Sill Height: 3,1m / 10,2 ft

The dimension of the forward lower-deck door is 2.446 M wide and 1.699 M high.

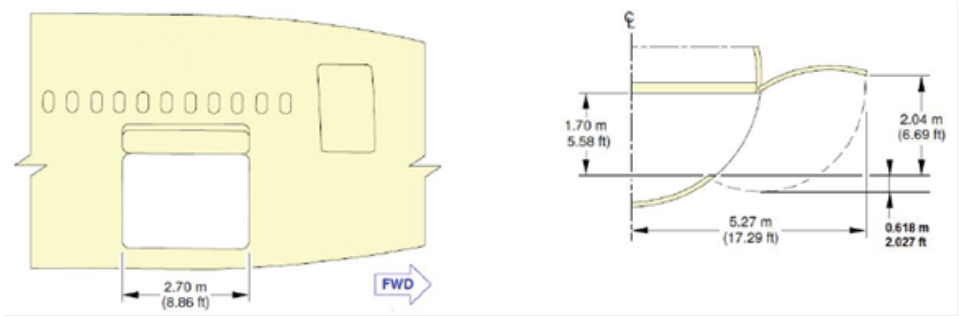

UNCONTROLLED DOCUMENT (28 NOVEMBER 2024 16:05:24)

UNCONTROLLED DOCUMENT

UNCONTROLLED DOCUMENT

UNCONTROLLED DOCUMENT

8.4 Aft Lower deck Door

During opening and closing of the forward and aft hold doors, the door swings down below door-sill level.

Maximum Door Sill Height: 3,52 m / 11,55 ft

The dimension of the Aft lower-deck door is 2.446 M wide and 1.699 M high.

Note: Lower-deck doors of containerised compartments must be opened using technical / maintenance steps to reach the cargo doors. In cases where technical / maintenance steps are not available, it is permitted to use belt-loaders with raised safety rails as long as they do not cause an obstacle. The use of a ULD loader / hi-loader to open / close lower deck doors is prohibited.

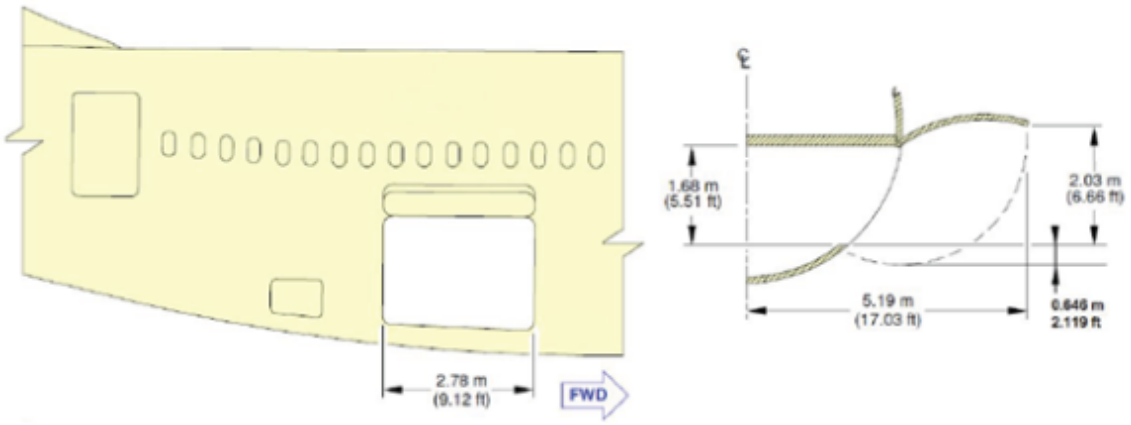

8.5 Bulk Door

Maximum Door Sill Height: 3,61 m / 11,84 ft

Note: Lower-deck door panels shall only be operated using stairs or belt loaders.

The dimension of the Bulk Door is 2.446 M wide and 1.699 M high.

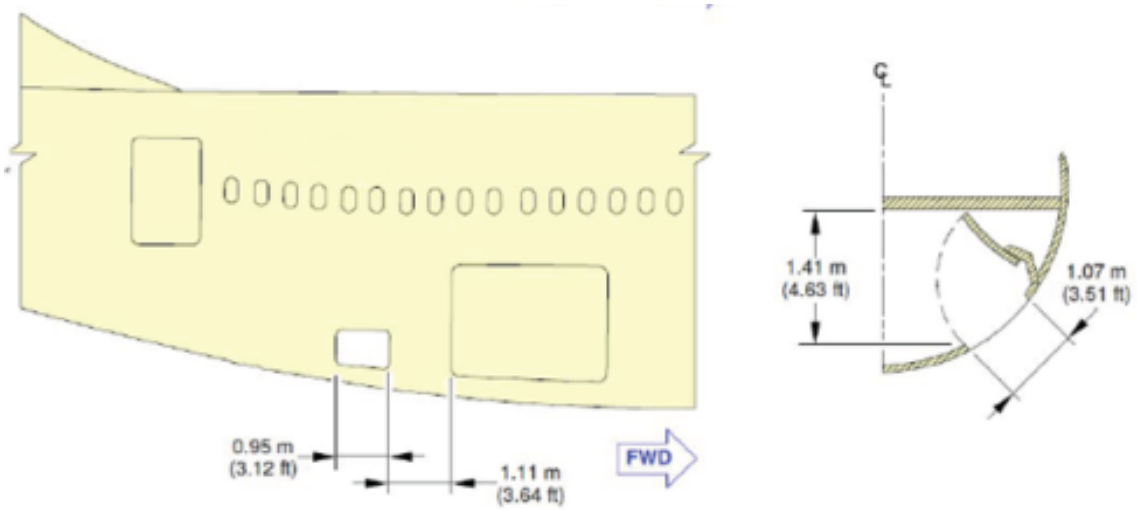

UNCONTROLLED DOCUMENT (28 NOVEMBER 2024 16:05:24)

UNCONTROLLED DOCUMENT

8.6 Cargo Door Dimensions table

Door	Door Width (cm)	Door Width (In)	Door Height (cm)	Door Height (In)	Max. Door Sill Height (m)
Crew Door	-	-	-	-	4.55
Side Cargo Door	358.1	145	256.1	96	4.92
Forward Hold	244.6	106	169.9	67	2.70
Aft Hold	244.6	107	169.9	66	3.43
Bulk Hold	95	37	62	24	3.68

Maximum height for a Lower Deck ULD is 164cm (64 inches)

UNCONTROLLED DOCUMENT

UNCONTROLLED DOCUMENT

UNCONTROLLED DOCUMENT (28 NOVEMBER 2024 16:05:24)

UNCONTROLLED DOCUMENT

9. Compartment Classification and Air-Conditioning

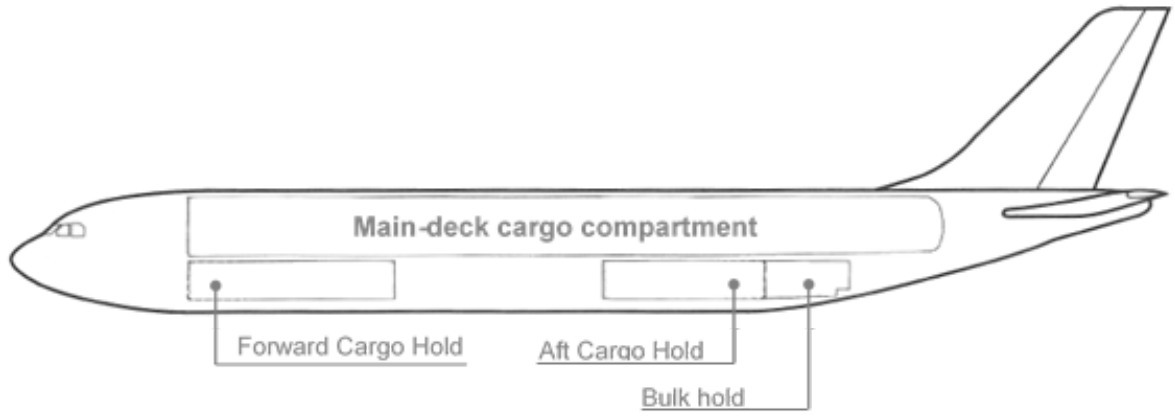

9.1 Compartment Classification

Compartment	Features
Main-deck	- Classification **E**
	- Pressurisation
	- Smoke Detection
Lower-deck	- Classification **C**
	- Pressurisation
	- Smoke Detection
	- Fire Suppression
	- **In-accessible** during flight

Note: Main-deck is accessible if single row configuration is applied.

9.2 Air-Conditioning

	Main-deck	Forward Hold	Aft Hold	Bulk	
Temperature	18 C to 30C	5 C to 25C	No Temp Control	5 C to 25C	
Heating	Yes	Yes	Yes		Yes
Heat adjust	Yes	Yes	No		Yes
Cooling	No	Yes	No		Yes
Ventilation	Yes				

UNCONTROLLED DOCUMENT (28 NOVEMBER 2024 16:05:24)

10. Aircraft Cabin Contour Dimensions

The aircraft is divided into two contour zones: CI and CII.

All heights are given from top of rollers.

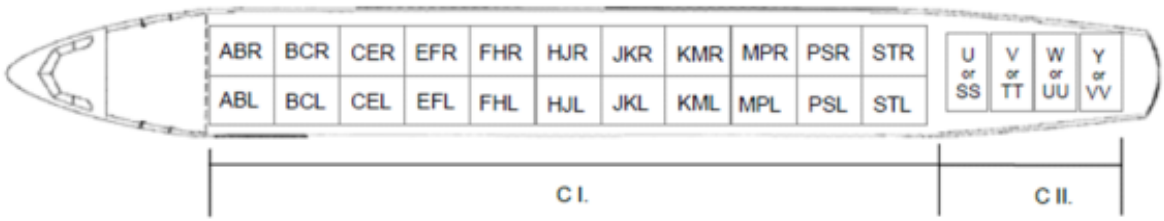

As an example, this drawing illustrates a cross-section of contour zone CI (positions ABR/ABL thru STR/STL)

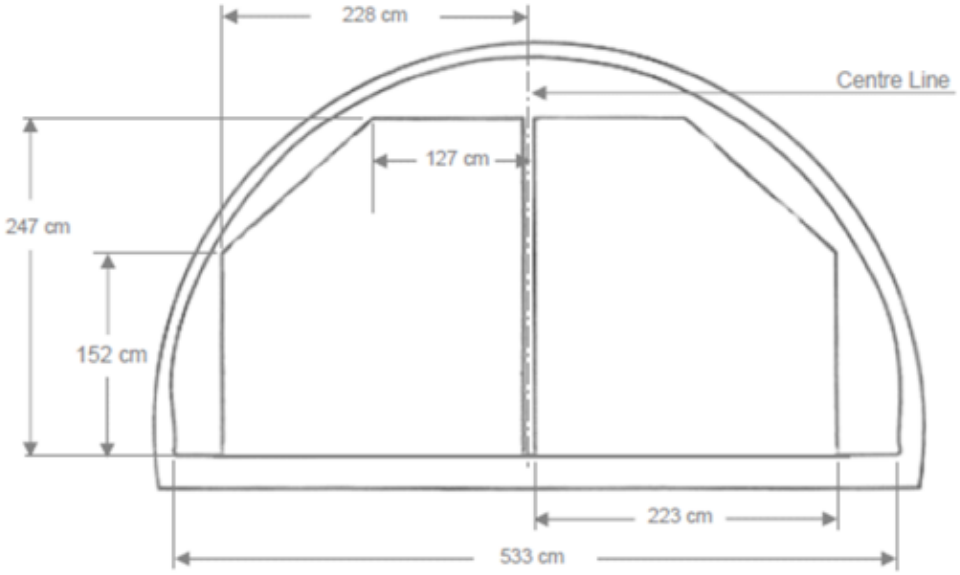

UNCONTROLLED DOCUMENT
UNCONTROLLED DOCUMENT

UNCONTROLLED DOCUMENT (28 NOVEMBER 2024 16:05:24)

UNCONTROLLED DOCUMENT

10.1 Contour CI:

Twin-track positions **ABR/ABL** thru **STR/STL**.

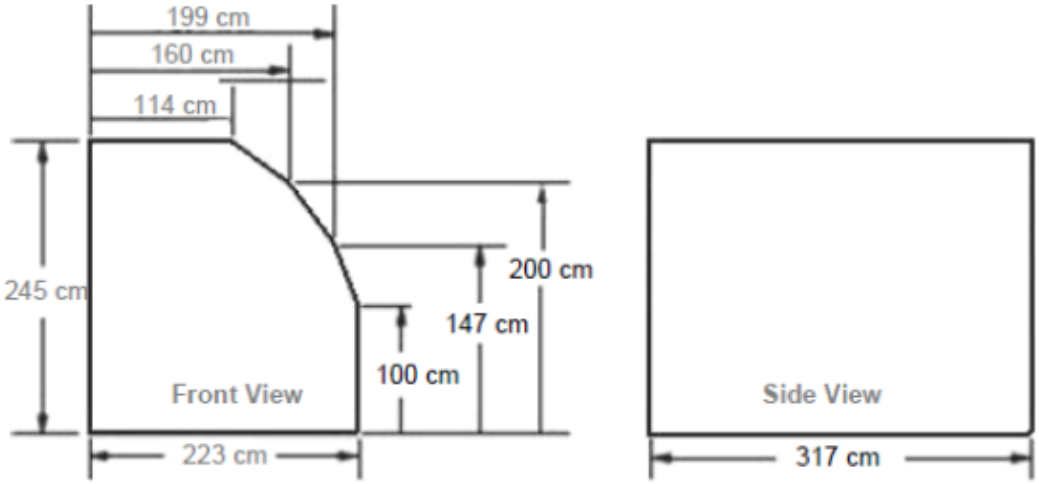

10.2 Contour CII:

Centre-line positions **U to Y (88")** or **SS to VV (96").**

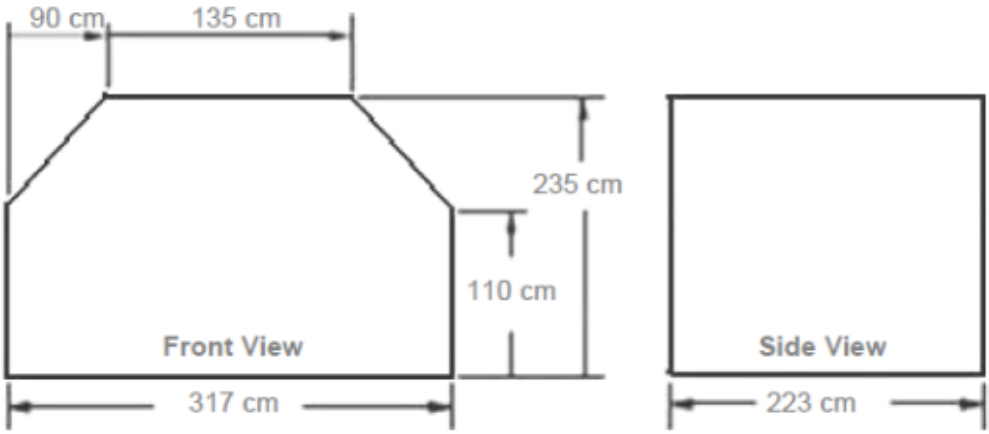

UNCONTROLLED DOCUMENT (28 NOVEMBER 2024 16:05:24)

UNCONTROLLED DOCUMENT

10.3 Single Track Contours:

Main-deck 10ft Lateral (125”/88” or 96”) ULDs, Centre-line positions **A to T (88”)** or **AA to RR (96”).**

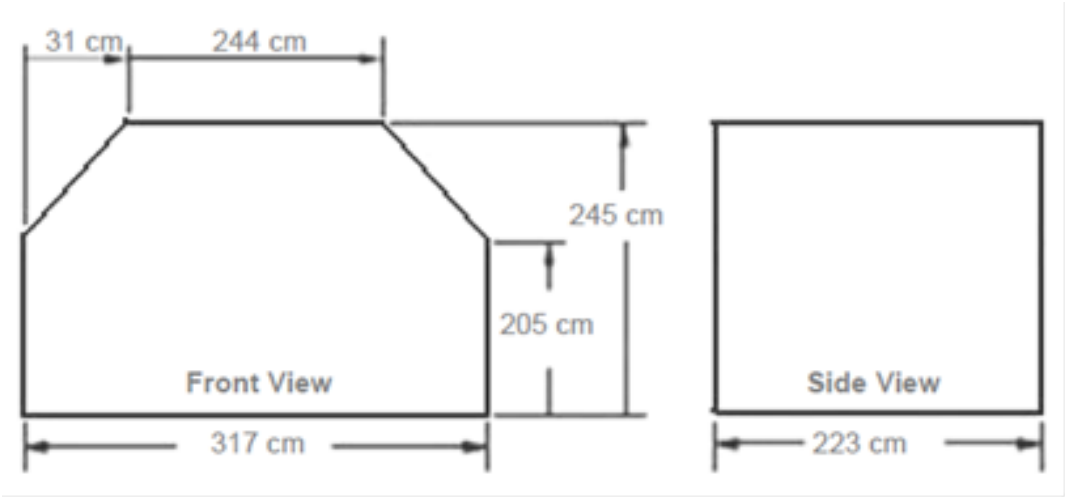

Main-deck 10ft Lateral (125”/88” or 96”) ULDs, Centre-line positions **U to Y (88”)** or **SS to VV (96”)**.

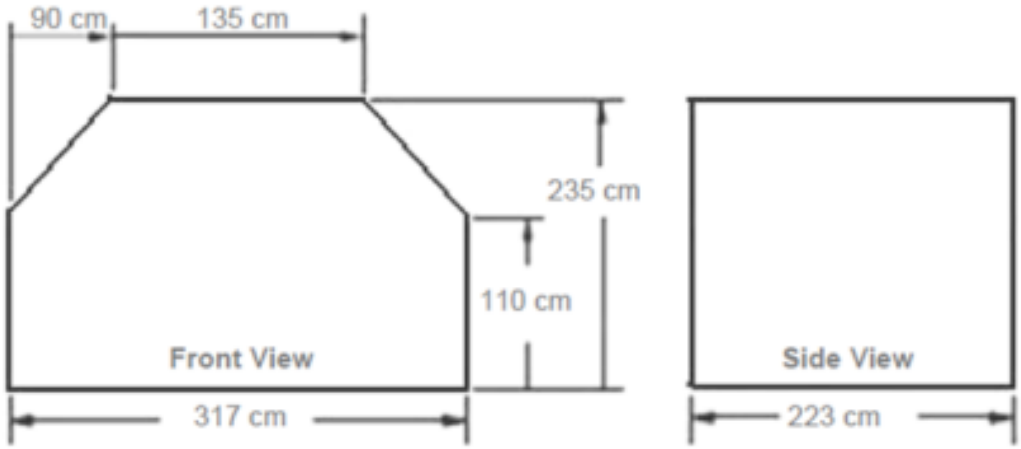

Main-deck 10ft Longitudinal (125”/96”) ULDs, Centre-line positions **AB to PS.**

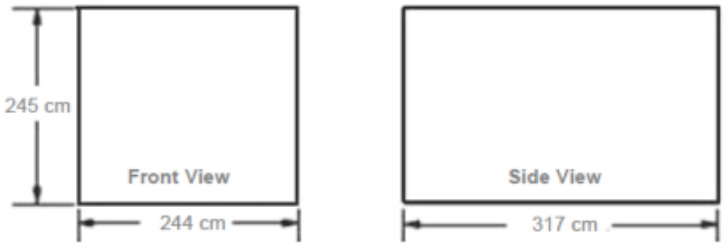

UNCONTROLLED DOCUMENT (28 NOVEMBER 2024 16:05:24)

11. Maximum Position Weights

11.1 Maximum Main-deck ULD Weights

	ULD Position and Max. Gross Weight (kg)																		
ULD Config.1 &2	**ABL/R**	**BCL/R**	**CEL/R**	**EFL/R**	**FHL/R**	**HJL/R**	**JKL/R**	**KML/R**	**MPL/R**	**PSL/R**	**STL/R**								
88" Twin	2000	2000	2361	2400	3831	4321			2948	2753	2629								
96" Twin	2000	2000	2361	2400	3831	4321			2948	2753	2629								
ULD Config.3	**A**	**B**	**C**	**D**	**E**	**F**	**G**	**H**	**J**	**K**	**L**	**M**	**P**	**R**	**S**	**T**	**U**	**V**	**W**	**Y**
88" Lateral	2826		2826	3391			6033					4914	4037	3887	3714			3542	3021	2422
ULD Config.4	**AA**	**BB**	**CC**	**DD**	**EE**	**FF**	**GG**	**HH**	**JJ**	**KK**	**LL**	**MM**	**PP**	**RR**	**SS**	**TT**	**UU**	**VV**		
96" Lateral	3080		3250	3696		5095	5670				5463	4400	4192	4048		3999	3300	2688		
ULD Config.5	**AB**	**BC**	**CE**	**EF**	**FH**	**HJ**	**JK**	**KM**	**MP**	**PS**										
96" Long.	3429		3945	4001	6804				4823	4442										
***ULD Config.6**			**CFR**		**FGR**		**GJR**		**JMR**		**MRR**									
16' Long			5993		8973		10668		10668		6236									
***ULD Config.7**					**EGG**		**GKG**		**KPG**											
20' Long					10547		11340		11340											

Note: *Configurations 6 and 7 not available for registration TCMCO

UNCONTROLLED DOCUMENT (28 NOVEMBER 2024 16:05:24)

UNCONTROLLED DOCUMENT

UNCONTROLLED DOCUMENT

11.2 Maximum Lower-deck Compartment Weights

Hold	Position	ULD Size				Max. Capacity (kg)
		88" /125" (AAJ)	96" /125" (PMC)	60,4" /125" (ALP)	60,4"/61,5" (AKE)	
FWD	11P, 12P, 21P, 22P, 23P, 24P	4626	5103			22861
	11, 12, 13, 14, 21, 22, 23, 24, 25, 26			3174		
	11, 12, 13, 21, 22, 23, 24, 25, 26 all positions R + L				1587	
AFT	31P, 32P, 33P, 41P, 42P	4626	5103			18507
	31, 32, 33, 34 41, 42, 43			3174		
	31, 32, 33, 34 41, 42, 43 (L&R)				1587	
	31, 32, 33 34, 41 (L&R)					
	31, 32, 33 34, 41					

11.2.1 Bulk Cargo Compartment

Compartment	Volume (m3)	Max. Weight (Kg)	Max. Capacity (Kg)
51	1.87	339	3468
52	7.87	1413	
53	9.94	1716	

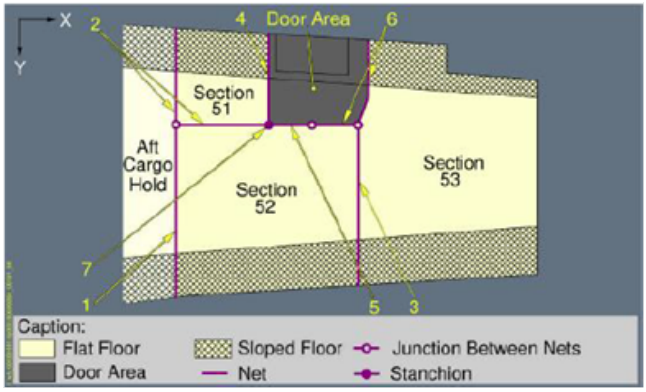

UNCONTROLLED DOCUMENT (28 NOVEMBER 2024 16:05:24)

12. Aircraft ULD Compatibility

12.1 Main Deck Configurations

The following pages display all individual loading configurations separately. The different loading configurations may be combined, depending on availability of restraints. For detailed information covering interaction of loading configurations, consult either SABLE or the on-board bay/position markings.

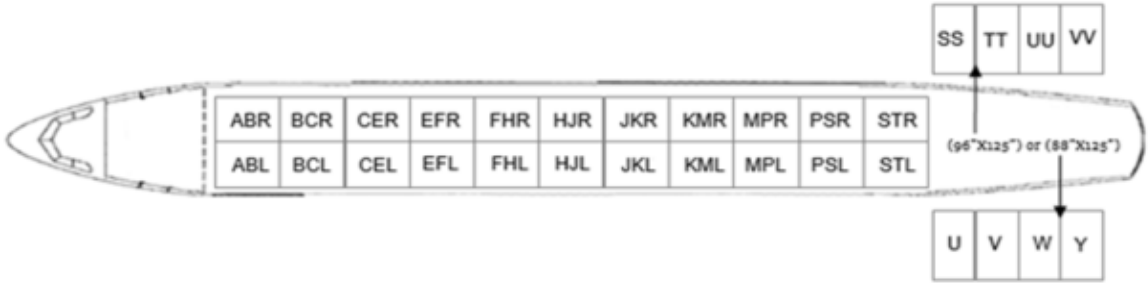

Configuration 1: 22 longitudinal twin-track 125”/88” and 4 Lateral centre-line 125”/88” or 96” positions

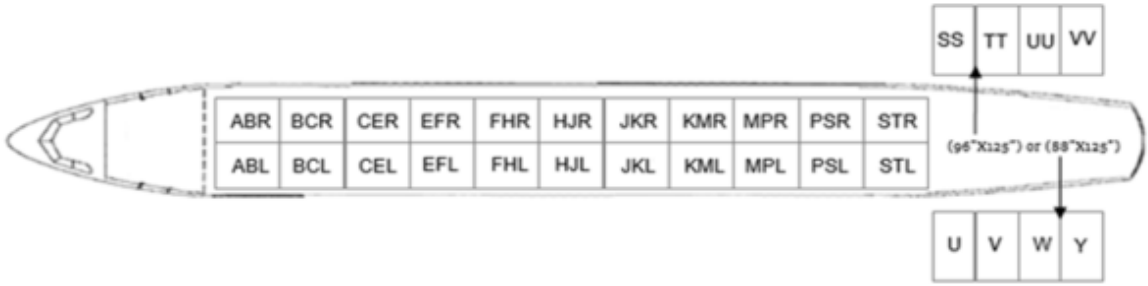

Configuration 2: 22 longitudinal twin-track 125”/96” and 4 Lateral centre-line 125”/88” or 96” positions



Configuration 3: 20 Lateral centre-line 125”/88” positions

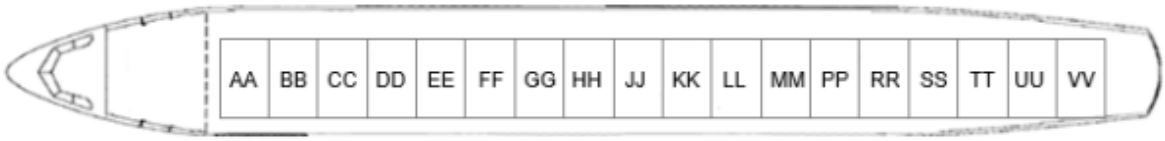

Configuration 4: 18 Lateral centre-line 125”/ 96” positions

UNCONTROLLED DOCUMENT
UNCONTROLLED DOCUMENT

UNCONTROLLED DOCUMENT (28 NOVEMBER 2024 16:05:24)



Configuration 5: 10 longitudinal centre-line 125”/96” positions and 5 lateral centre-line 125”/88” or 96” positions

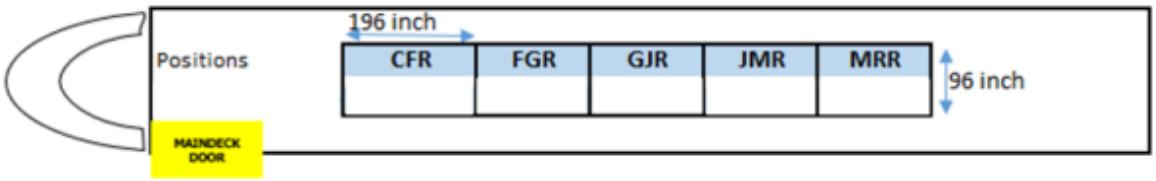

***Configuration 6:** 4 longitudinal centre-line 16ft positions

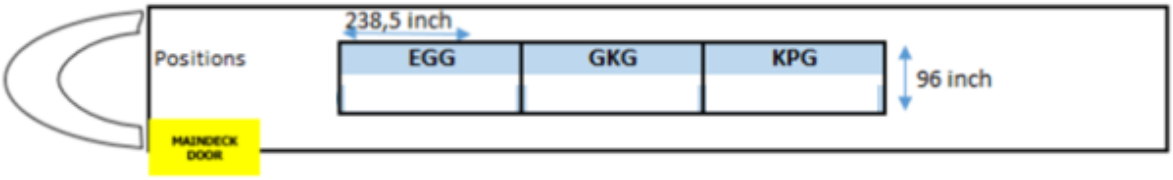

***Configuration 7:** 3 longitudinal centre-line 20ft positions

Note: Configurations 6 & 7 not available on registration TCMCO

UNCONTROLLED DOCUMENT
UNCONTROLLED DOCUMENT

UNCONTROLLED DOCUMENT (28 NOVEMBER 2024 16:05:24)

UNCONTROLLED DOCUMENT

12.2 Main Deck ULD Compatibility

The following ULD type loading restrictions apply for configurations A to C. The ULD type can be loaded on positions marked with a 'Y'. The ULD type cannot be loaded on positions marked with a 'N'.

		ULD Type										
	Pos	AAA	AAC/ LAY	AAJ/ LAK	AAX	AMF	AMJ	AMP	AMV	PAG	PMC	RAP
Configuration 1	ABL/R	N	Y	Y	Y	N	N	N	N	Y	N	N
	BCL/R	N	Y	Y	Y	N	N	N	N	Y	N	N
	CEL/R	N	Y	Y	Y	N	N	N	N	Y	N	N
	EFL/R	N	Y	Y	Y	N	N	N	N	Y	N	N
	FHL/R	N	Y	Y	Y	N	N	N	N	Y	N	N
	HJL/R	N	Y	Y	Y	N	N	N	N	Y	N	N
	JKL/R	N	Y	Y	Y	N	N	N	N	Y	N	N
	KML/R	N	Y	Y	Y	N	N	N	N	Y	N	N
	MPL/R	N	Y	Y	Y	N	N	N	N	Y	N	N
	PSL/R	N	Y	Y	Y	N	N	N	N	Y	N	N
	STL/R	N	Y	Y	Y	N	N	N	N	Y	N	N
Configuration 2	ABL/R	N	N	N	N	N	N	N	Y	N	Y	N
	BCL/R	N	N	N	N	N	N	N	Y	N	Y	N
	CEL/R	N	N	N	N	N	N	N	Y	N	Y	N
	EFL/R	N	N	N	N	N	N	N	Y	N	Y	N
	FHL/R	N	N	N	N	N	N	N	Y	N	Y	N
	HJL/R	N	N	N	N	N	N	N	Y	N	Y	N
	JKL/R	N	N	N	N	N	N	N	Y	N	Y	N
	KML/R	N	N	N	N	N	N	N	Y	N	Y	N
	MPL/R	N	N	N	N	N	N	N	Y	N	Y	N
	PSL/R	N	N	N	N	N	N	N	Y	N	Y	N
	STL/R	N	N	N	N	N	N	N	Y	N	Y	N
Configuration 3	A	Y	Y	Y	N	N	N	N	N	Y	N	Y1
	B	Y	Y	Y	N	N	N	N	N	Y	N	Y1
	C	Y	Y	Y	N	N	N	N	N	Y	N	Y
	D	Y	Y	Y	N	N	N	N	N	Y	N	Y
	E	Y	Y	Y	N	N	N	N	N	Y	N	Y
	F	Y	Y	Y	N	N	N	N	N	Y	N	Y
	G	Y	Y	Y	N	N	N	N	N	Y	N	Y
	H	Y	Y	Y	N	N	N	N	N	Y	N	Y
	J	Y	Y	Y	N	N	N	N	N	Y	N	Y
	K	Y	Y	Y	N	N	N	N	N	Y	N	Y
	L	Y	Y	Y	N	N	N	N	N	Y	N	Y
	M	Y	Y	Y	N	N	N	N	N	Y	N	Y
	P	Y	Y	Y	N	N	N	N	N	Y	N	Y
	R	Y	Y	Y	N	N	N	N	N	Y	N	Y
	S	Y	Y	Y	N	N	N	N	N	Y	N	Y
	T	Y	Y	Y	N	N	N	N	N	Y	N	Y
	U	Y	Y	Y	N	N	N	N	N	Y	N	Y
	V	Y	Y	Y	N	N	N	N	N	Y	N	Y
	W	Y	Y	Y	N	N	N	N	N	Y	N	Y
	Y	Y	Y	Y	N	N	N	N	N	Y	N	Y

UNCONTROLLED DOCUMENT (28 NOVEMBER 2024 16:05:24)

The following ULD type loading restrictions apply for configurations A to C. The ULD type can be loaded on positions marked with a 'Y'. The ULD type cannot be loaded on positions marked with a 'N'.

		ULD Type													
	Pos	AAA	AAC/ LAY	AAJ/ LAK	AAX	AMF	AMJ	AMP	AMV	PAG	PMC	RAP	PRA	PRB	PGA
Configuration 4	AA	N	N	N	N	Y	N	Y	N	N	Y	N	N	N	N
	BB	N	N	N	N	Y	N	Y	N	N	Y	N	N	N	N
	CC	N	N	N	N	Y	N	Y	N	N	Y	N	N	N	N
	DD	N	N	N	N	Y	N	Y	N	N	Y	N	N	N	N
	EE	N	N	N	N	Y	N	Y	N	N	Y	N	N	N	N
	FF	N	N	N	N	Y	N	Y	N	N	Y	N	N	N	N
	GG	N	N	N	N	Y	N	Y	N	N	Y	N	N	N	N
	HH	N	N	N	N	Y	N	Y	N	N	Y	N	N	N	N
	JJ	N	N	N	N	Y	N	Y	N	N	Y	N	N	N	N
	KK	N	N	N	N	Y	N	Y	N	N	Y	N	N	N	N
	LL	N	N	N	N	Y	N	Y	N	N	Y	N	N	N	N
	MM	N	N	N	N	Y	N	Y	N	N	Y	N	N	N	N
	PP	N	N	N	N	Y	N	Y	N	N	Y	N	N	N	N
	RR	N	N	N	N	Y	N	Y	N	N	Y	N	N	N	N
	SS	N	N	N	N	N	N	Y	N	N	Y	N	N	N	N
	TT	N	N	N	N	N	N	Y	N	N	Y	N	N	N	N
	UU	N	N	N	N	N	N	Y	N	N	Y	N	N	N	N
	VV	N	N	N	N	N	N	Y	N	N	Y	N	N	N	N
Configuration 5	AB	N	N	N	N	N	Y2	N	N	N	Y	N	N	N	N
	BC	N	N	N	N	N	Y2	N	N	N	Y	N	N	N	N
	CE	N	N	N	N	N	Y2	N	N	N	Y	N	N	N	N
	EF	N	N	N	N	N	Y2	N	N	N	Y	N	N	N	N
	FH	N	N	N	N	N	Y2	N	N	N	Y	N	N	N	N
	HJ	N	N	N	N	N	Y2	N	N	N	Y	N	N	N	N
	JK	N	N	N	N	N	Y2	N	N	N	Y	N	N	N	N
	KM	N	N	N	N	N	Y2	N	N	N	Y	N	N	N	N
	MP	N	N	N	N	N	Y2	N	N	N	Y	N	N	N	N
	PS	N	N	N	N	N	Y2	N	N	N	Y	N	N	N	N
Configuration 6	CFR	N	N	N	N	N	N	N	N	N	N	N	N	N	N
	FGR	N	N	N	N	N	N	N	N	N	N	N	N	N	N
	CJR	N	N	N	N	N	N	N	N	N	N	N	N	N	N
	JMR	N	N	N	N	N	N	N	N	N	N	N	N	N	N
	MRR	N	N	N	N	N	N	N	N	N	N	N	N	N	N
Config. 7	EGG	N	N	N	N	N	N	N	N	N	N	N	N	N	N
	GKG	N	N	N	N	N	N	N	N	N	N	N	N	N	N
	KPG	N	N	N	N	N	N	N	N	N	N	N	N	N	N

Y1: Active RAP not allowed

Y2: AMJ must be loaded with the sloped side facing left (towards door)

*No overhangs allowed Config. 1

Notes: All Pallets must be to contour. Configurations 6 & 7 not available on registration TCMCO

UNCONTROLLED DOCUMENT

12.3 Lower Deck Configurations

12.3.1 Forward Hold



Configuration 1: 6 Lateral 125”/88” ULDs or 6 Lateral 125”/96”ULDs

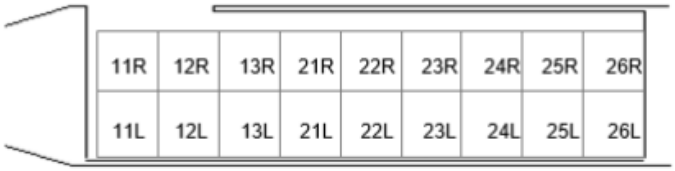

Configuration 2: 7 x Lateral 125”x60.4” or 14 Twin-track 61.5”x60.4” positions

12.3.2 Aft Hold



Configuration 1: 4 Lateral 125”x88” ULDs or 4 Lateral 125”x96”ULDs

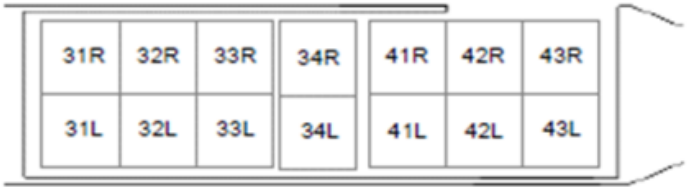

Configuration 2: 6 Lateral 125”/60.4” (Positions: 32 – 43) or 13 Twin-track 61.5”/60.4” ULD (Positions 31R; 32R/L and afterwards)

UNCONTROLLED DOCUMENT

UNCONTROLLED DOCUMENT

UNCONTROLLED DOCUMENT (28 NOVEMBER 2024 16:05:25)

UNCONTROLLED DOCUMENT

12.4 Lower Deck ULD Compatibility

The following ULD type loading restrictions apply. The ULD type can be loaded on positions marked with a 'Y'. The ULD type cannot be loaded on positions marked with a 'N'.

		ULD Type									
	Pos	AAJ/ LAK	AMF	AMP	RAP	PAG	PMC	AKE	PKC	RKN	ALP
FWD 1	11P	Y	Y	Y	Y	Y	Y	N	N	N	N
	12P	Y	Y	Y	Y	Y	Y	N	N	N	N
	13P	Y	Y	Y	Y	Y	Y	N	N	N	N
	21P	Y	Y	Y	Y	Y	Y	N	N	N	N
	22P	Y	Y	Y	Y	Y	Y	N	N	N	N
FWD 2	11 (L/R)	N	N	N	N	N	N	Y	Y	Y	Y
	12 (L/R)	N	N	N	N	N	N	Y	Y	Y	Y
	13 (L/R)	N	N	N	N	N	N	Y	Y	Y	Y
	21 (L/R)	N	N	N	N	N	N	Y	Y	Y	Y
	22 (L/R)	N	N	N	N	N	N	Y	Y	Y	Y
	23 (L/R)	N	N	N	N	N	N	Y	Y	Y	Y
	24 (L/R)	N	N	N	N	N	N	Y	Y	Y	Y
	25 (L/R)	N	N	N	N	N	N	Y	Y	Y	Y
	26 (L/R)	N	N	N	N	N	N	Y	Y	Y	Y
AFT 1	31P	Y	Y	Y	Y	Y	Y	N	N	N	N
	32P	Y	Y	Y	Y	Y	Y	N	N	N	N
	33P	Y	Y	Y	Y	Y	Y	N	N	N	N
	41P	Y	Y	Y	Y	Y	Y	N	N	N	N
	42P	Y	Y	Y	Y	Y	Y	N	N	N	N
AFT 2	31 (R/L)	N	N	N	N	N	N	Y	Y	Y	Y
	32 (R/L)	N	N	N	N	N	N	Y	Y	Y	Y
	33 (R/L)	N	N	N	N	N	N	Y	Y	Y	Y
	34 (R/L)	N	N	N	N	N	N	Y	Y	Y	Y
	41 (R/L)	N	N	N	N	N	N	Y	Y	Y	Y
	42 (R/L)	N	N	N	N	N	N	Y	Y	Y	Y
	43 (R/L)	N	N	N	N	N	N	Y	Y	Y	Y

Aft hold notes:

Whenever possible, a full complement of either ALP or AKE ULDs should be carried.

All ALP ULDs must be inspected to ensure the base-plate is flat, to prevent the ULDs from jumping the locks. ULDs with a bent base-plate will not be sufficiently restrained.

UNCONTROLLED DOCUMENT (28 NOVEMBER 2024 16:05:25)

13. Loading and Un-Loading

13.1 Cargo Loading System (CLS)

The Main-deck loading system is controlled by the:

- Master Control Panel (MCP)
- Center Row Panel (CRP)
- Local Control Panel (LCPs)

There are four LCPs: two on the right hand side (LCP-RH2 & LCP-RH3) and two on the left hand side (LCP-LH2 & LCP-LH3).

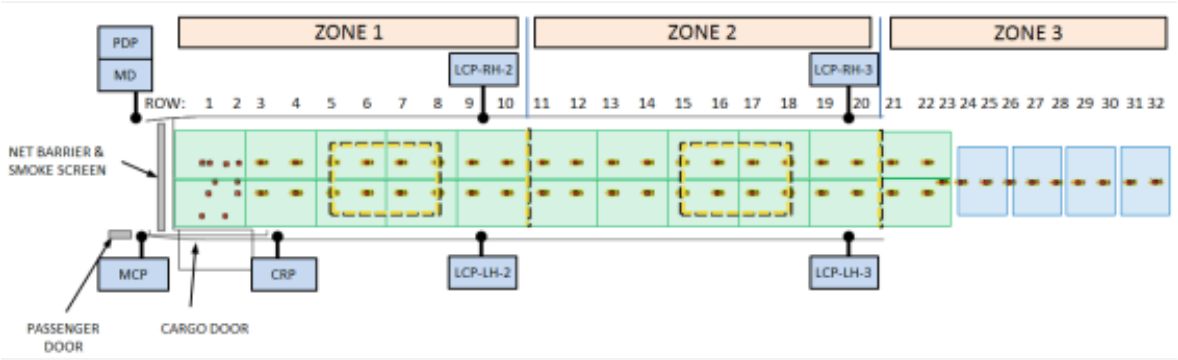

A minimum of 2 persons are required to operate the CLS: First, a qualified team member to operate the MCP (or the CRP) and a regular loading team member to operate the LCPs.

The aircraft is equipped with Lower-deck PDUs, controlled by a joystick located in the doorway of the FWD and AFT holds, and may be used for both lateral and longitudinal movement of ULDs.

13.2 Risk of Tail-Tipping

Observe the following rules to prevent risk of tail-tipping.

These load instructions are created using calculated notional conditions and cannot be taken as an absolute as the conditions on the day may not be the same, caution and common sense should always be employed when loading or unloading any aircraft. If it doesn't look right STOP!

The aircraft is more unstable the higher the wind speed. The following loading sequence assumes the aircraft arrives with a LW ZF of 25% MAC, 40kt wind (door limit), and all main deck ULDs at maximum weight.

UNCONTROLLED DOCUMENT
UNCONTROLLED DOCUMENT

UNCONTROLLED DOCUMENT (28 NOVEMBER 2024 16:05:25)

UNCONTROLLED DOCUMENT

13.3 Loading Sequence

Step 1: This load sequence does not rely on lower deck loads. Load the forward lower deck. The aft lower deck and bulk holds may be loaded up to the total weight loaded in the forward hold simultaneously to the main deck loading (i.e. total load in FWD 3000 kg = Aft may be loaded up to 3000 kg – then wait for main deck loading completion before finishing the loading).

Step 2: Load the Main-deck in the following sequence, and respect standard stage loading method:



UNCONTROLLED DOCUMENT (28 NOVEMBER 2024 16:05:25)

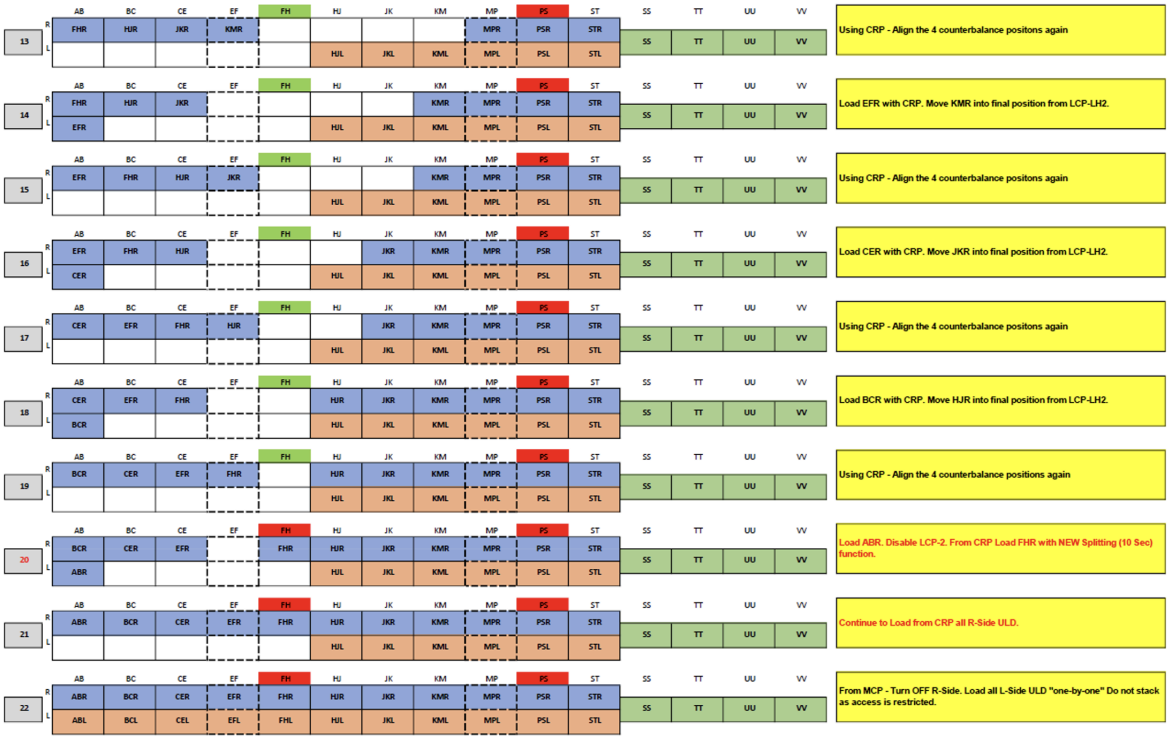

Step 3: Any remaining load for the aft lower-deck & bulk holds may now be loaded.

Note: Anything AFT of position J produces an AFT index effect.

Load should be prepared on the ground and placed onto the hi-loader in the order shown below:

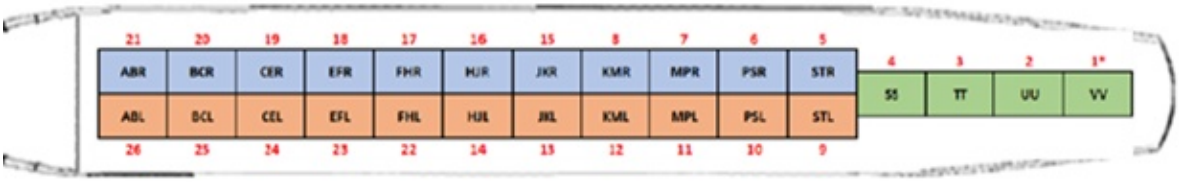

UNCONTROLLED DOCUMENT
UNCONTROLLED DOCUMENT

UNCONTROLLED DOCUMENT (28 NOVEMBER 2024 16:05:25)

UNCONTROLLED DOCUMENT

13.4 Un-Load Sequence

Step 1: Un-load the AFT Hold and Bulk Hold in parallel.

Step 2: Unload the Main-deck in the following sequence, and respect standard stage loading method:

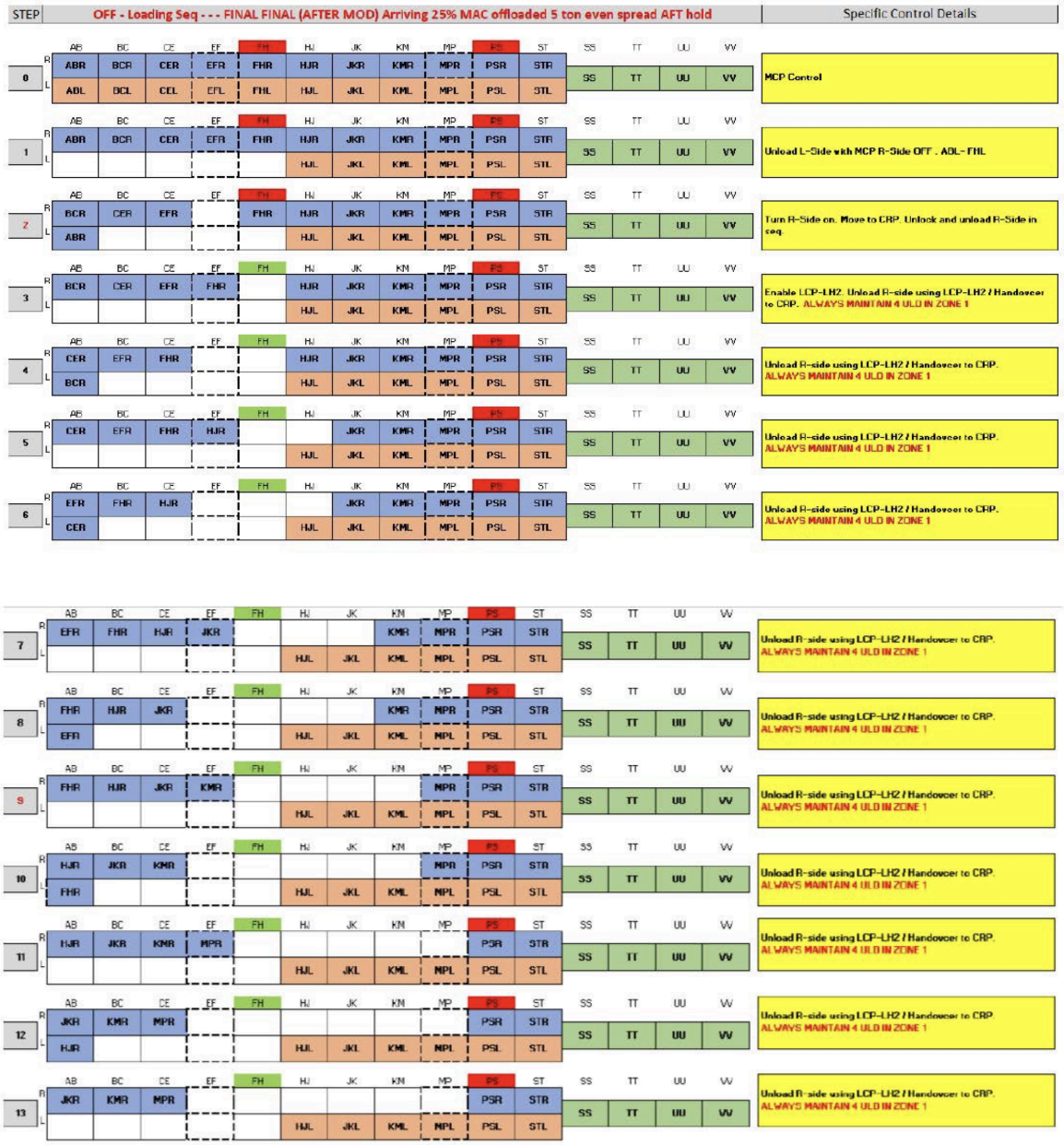

UNCONTROLLED DOCUMENT

UNCONTROLLED DOCUMENT (28 NOVEMBER 2024 16:05:25)



Step 3: Un-load the FWD Hold

The load will be unloaded from the aircraft in the following order:

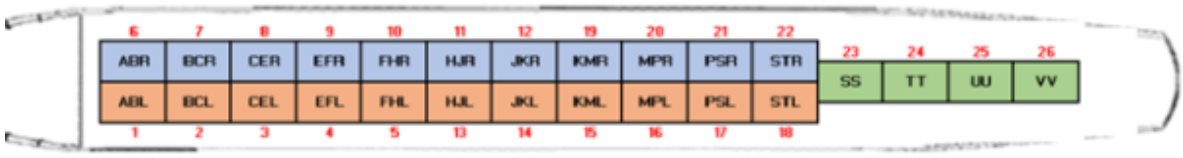

UNCONTROLLED DOCUMENT
UNCONTROLLED DOCUMENT

UNCONTROLLED DOCUMENT (28 NOVEMBER 2024 16:05:25)

UNCONTROLLED DOCUMENT

13.5 Loading Notes

13.5.1 Ground Stability

To ensure ground stability, the Lower Deck FWD hold and Main Deck shall be loaded first and can be loaded simultaneously. Loading of the Lower Deck Aft and / or Bulk Hold is to be completed last.

13.5.2 Cargo loading systems (CLS)

When the CLS receives power - Zones 2 & 3 are DISABLED, Zone 1 is active. MCP is in use for LH-Side Offload.

When an Unload command is given – All PDUs in the control area will drive. This can cause the ULDs to push up against the raised locks and can cause difficulty in retracting them to unload the ULD. A momentary Load command from the control area will reverse the ULD to relieve the pressure on the locks enabling them to be retracted as required.

CAUTION - Any previously unlocked ULDs that are in a staging position (ULDs that are in the same control area) will also move momentarily in the command direction given (Unload/Load). – CARE must be exercised before any commands are given.

13.5.3 Tail Tank Effect on Ground Stability

This aircraft is fitted with a tail-tank in the horizontal stabiliser. Any fuel remaining in the tail-tank will have a considerable aft moment effect.

Note: Un-loading and loading with fuel remaining in the tail-tank is prohibited. On arrival, the crew has to be asked whether fuel is remaining in the trim tank, and if so, to transfer it to the centre tank prior offload.

UNCONTROLLED DOCUMENT

UNCONTROLLED DOCUMENT

UNCONTROLLED DOCUMENT (28 NOVEMBER 2024 16:05:25)

UNCONTROLLED DOCUMENT

13.5.4 Transit loads

No transit material is allowed to remain on board in the AFT lower deck. Transit material on main deck shall be completely offloaded and subsequently reloaded.

If 4 tons are loaded in FWD lower deck, partial offload of main deck is allowed, as long as main deck transit material is placed forward of position JKL/JKR* and stage loading is respected at all times.

Bulk hold transit load may remain on board in case the FWD lower deck is loaded with a minimum of 4 tons.

* For EU standard twin track loading configuration; all other configurations as per below.

Note that any material beyond the following points will create an AFT moment:

- Twin track 125x88 Position JKL/JKR
- Twin track 125x96 Position JKL/JKR
- Single row 88x125 Position K
- Single row 96x125 Position JJ
- Longitudinal 125x96 Position JK

For all other loading configurations, the above loading/un-loading methods shall be applied in an equivalent way during the loading as well as un-loading process.

Special care shall be taken to the aircraft balance during loading and offloading when all lower decks are empty or only filled with ELDs.

This requires the following sequential offloading and loading process:

When a ULD is offloaded or moved forward, its vacant/empty position has to be occupied by the next ULD in line such that the empty position travels to the back of the main cargo deck.

When a ULD is loaded or moved backward, its vacant/empty position should be occupied by the next ULD in line up to position E with the aim to provide sufficient counterweight for the ULDs being loaded.

UNCONTROLLED DOCUMENT

UNCONTROLLED DOCUMENT

UNCONTROLLED DOCUMENT (28 NOVEMBER 2024 16:05:25)

14. Rigid, Oversized and Special Loads

For guidance on the handling of special loads, please refer to the Special Loads Regional Contact Instructions outlined in Chapter 6 **6.12.22.3 - Determining Loadability of Special Loads**. Where direct operator approval is required, the Regional Airside Team will liaise with Global Airside as needed.

14.1 Floating / Heavy Pallets

ULDs which are heavier than the standard allowed maximum gross weight may be loaded on the main deck as centre load.

Permission must be sought from your Special Loads Regional contact before accepting any ULDs which require loading on a floating position.

The permission, including a special loading instruction, will be granted only after all details concerning the load and the loading have been checked and clarified.

14.2 Crushable Cargo Requirements

If one or several rigid cargo ULDs are loaded on any aircraft position then one or several crushable cargo ULDs must be loaded between the barrier wall and the rigid cargo ULD(s).

If there are rigid cargo ULDs on board the aircraft, the crushable cargo ULDs must be in the first loaded positions aft of the barrier wall. The preferred (but not mandatory) positions for the crushable cargo ULDs are the positions directly behind the barrier wall: Positions A, AA, ABR/ABL, AB. This requirement does not apply if there is no rigid cargo on board the aircraft.

If the rigid cargo ULD is loaded on one side of a side-by-side configuration, then the position laterally adjacent to the crushable cargo ULD must also be occupied with a crushable cargo ULD. This configuration protects the barrier wall against the potential impacts due to the rigid cargo in the case of transverse accelerations.

The weight of the crushable cargo depends on the weight of the rigid cargo. Refer to the table below to determine the minimum weight required for the crushable cargo ULD.

If several rigid cargo ULDs are loaded, it is the weight of the heaviest rigid cargo ULD that is used to determine the minimum weight for the crushable cargo ULD.

The minimum weight of crushable cargo can be loaded on one or several cargo ULDs.

UNCONTROLLED DOCUMENT
UNCONTROLLED DOCUMENT

UNCONTROLLED DOCUMENT (28 NOVEMBER 2024 16:05:25)

UNCONTROLLED DOCUMENT

Crushable Load Minimum Weight Requirements

Crushable Load Minimum Weight Requirements	
Rigid Cargo ULD Weight (kg)	Crushable Cargo ULDs minimum Weight (kg)
1000	393
1500	590
2000	786
2500	982
3000	1179
3500	1375
4000	1557
4500	1726
5000	1892
5500	2058
6000	2224
6500	2389
7000	2555
7500	2721
8000	2887
8500	3053
9000	3218
9500	3384
10000	3550
10500	3716
11000	3882
11500	4051
12000	4227
12500	4403
13000	4579
13500	4755
14000	4931
14500	5107
15000	5284
15500	5460
16000	5636
16500	5812

UNCONTROLLED DOCUMENT

UNCONTROLLED DOCUMENT (28 NOVEMBER 2024 16:05:25)

UNCONTROLLED DOCUMENT

UNCONTROLLED DOCUMENT

14.3 Piercing Cargo

Loading of pipes, bars, poles or any other long/thin items is not allowed on the first and last loading position of any given configuration.

14.4 Aircraft Engines

To gain approval for loading of Aircraft Engines please contact your Special Loads Regional Contact.

14.5 Live Animals

14.5.1 Horses

The carriage of horses is permitted with approval from MNG Airlines. For approval, please contact your Special Loads Regional Contact.

14.5.2 Other Live Animals

The following table provides a list of commonly transported animals. If there is a requirement to transport animals not listed below, contact your Special Loads Regional Contact for more information.

	Main-Deck	FWD Hold	AFT Hold	BULK
Horses	Yes	No		
Day-old chickens	Yes	No		
Monkeys				
Pigs				
Cattle				
Sheep or Goats				
Dogs or Cats				
Small mammals or Birds				
Tropical Fish				
Reptiles or Amphibians				
Eels				
Crustaceans or Molluscs				
Bees				
Hatching Eggs				

UNCONTROLLED DOCUMENT (28 NOVEMBER 2024 16:05:25)

15. Restricted Commodities Loading

15.1 Radioactive (RRY), Magnetised (MAG) and Cargo Aircraft Only (CAO)

The following Dangerous Good type loading restrictions apply. The Dangerous Good type can be loaded on positions marked with a 'Y'. The Dangerous Good type cannot be loaded on positions marked with a 'N'.

	Position														
	Main-deck												Lower-deck		
DG Type	AB L/R	BC L/R	CE L/R	EF L/R	FH L/R	HJ L/R	JK L/R	KM L/R	MP L/R	PS L/R	ST L/R	U-Y	FWD	AFT	Bulk
MAG	N	N	N	N	N	N	Y	Y	Y	Y	Y	Y	N	Y	N
CAO	N	N	N	N	N	N	N	N	N	N	N	N	Y	Y	N
RRY (max. 50 TI combined)	N	N	Y	Y	Y	Y	Y	Y	Y	Y	Y	Y	N	Y	N
RRY (max. 200 TI combined)	N	N	N	N	Y	Y	Y	Y	Y	Y	Y	Y	N	Y	N

Notes:

MAG - Centreline loading position **K** or behind only.

15.2 Dry Ice

Please see the Global Supplementary Operational Document **Dry Ice Consolidation table** for the current maximum allowed Dry Ice limits.

15.3 Dry Ice (ICE) and Live Animals (AVI)

There is no additional weight limit for the loading of Dry Ice (ICE) together with Live Animals (AVI) on the Main-deck of this aircraft.

Loading of AVI together with ICE is not allowed in the FWD & AFT Holds or BULK compartment.

15.4 Lithium Batteries

Please see the Global Supplementary Operational Document **Lithium Battery Loadability Consolidation Table** for the current UN3480 Section IA/IB (RBI), UN3090 Section IA/IB (RBM), UN3481 Section I (RLI), UN3091 Section I (RLM) load ability limits.

UNCONTROLLED DOCUMENT
UNCONTROLLED DOCUMENT

UNCONTROLLED DOCUMENT (28 NOVEMBER 2024 16:05:25)

UNCONTROLLED DOCUMENT

16. Messaging

Standard messaging rules apply.

UNCONTROLLED DOCUMENT

UNCONTROLLED DOCUMENT

UNCONTROLLED DOCUMENT (28 NOVEMBER 2024 16:05:25)

UNCONTROLLED DOCUMENT

17. Reporting

Standard reporting rules apply.

UNCONTROLLED DOCUMENT

UNCONTROLLED DOCUMENT

UNCONTROLLED DOCUMENT (28 NOVEMBER 2024 16:05:25)

UNCONTROLLED DOCUMENT

18. Load Control Data

18.1 Standard Mass Additions

18.1.1 Additional Crew Members (ACM)

Maximum Number of ACMs:	6
Mass of ACM:	85 kg each, Luggage 10kg each and 5kg catering each

18.1.2 Fly Away Kit (FAK) and Ballast

FAK is not carried as standard on this aircraft.

Ballast is not carried as standard on this aircraft.

18.2 Minimum Fuel and Standard Taxi Fuel

Standard Taxi Fuel:	600 kg

18.3 LMC Restrictions

SABLE Load-sheet:	+/- 2500 kg

UNCONTROLLED DOCUMENT

UNCONTROLLED DOCUMENT

UNCONTROLLED DOCUMENT (28 NOVEMBER 2024 16:05:25)

19. Maximum Package Dimensions Main deck

Maximum Length (m)		Package Height(1) (m)									
		1.07	1.22	1.37	1.52	1.68	1.83	1.98	2.13	2.29	2.44
Package Width (m)	0.15	29.64	28.83	25.35	21.94	19.02	16.38	13.97	11.99	9.88	8.30
	0.30	24.46	23.19	20.85	18.46	16.31	14.30	12.40	10.80	9.02	7.67
	0.43	20.29	19.40	17.73	15.95	14.30	12.70	11.15	9.80	8.30	7.11
	0.61	17.37	16.71	15.42	14.0S	12.72	11.43	10.16	9.02	7.70	6.65
	0.76	15.19	14.68	13.66	12.55	11.48	10.41	9.32	8.33	7.16	6.22
	0.91	13.49	13.08	12.27	11.35	10.46	9.55	8.61	7.75	6.70	5.87
	1.07	12.14	11.81	11.15	10.36	9.60	8.84	8.00	7.24	6.32	5.54
	1.22	11.05	10.77	10.21	9.55	8.89	8.20	7.49	6.81	5.97	5.23
	1.37	10.16	9.91	9.42	8.86	8.28	7.67	7.04	6.43	5.64	4.98
	1.52	9.37	9.17	8.76	8.26	7.75	7.21	6.63	6.07	5.36	4.75
	1.68	8.74	8.53	8.18	7.75	7.29	6.81	6.30	5.76	5.10	4.52
	1.83	8.15	8.00	7.67	7.29	6.88	6.45	5.97	5.51	4.88	4.34
	1.98	7.67	7.52	7.24	6.91	6.53	6.15	5.69	5.26	4.67	
	2.13	7.24	7.11	6.86	6.55	6.22	5.87	5.46	5.05	4.50	
	2.29	6.86	6.73	6.50	6.22	5.94	5.61	5.23	4.85		
	2.44	6.53	6.43	6.20	5.94	5.69	5.38	5.03			
	2.59	6.22	6.12	5.94	5.72	5.46					
	2.74	5.94	5.87								

*The height is measured from the top of the rollers of the CLS.

UNCONTROLLED DOCUMENT
UNCONTROLLED DOCUMENT

UNCONTROLLED DOCUMENT (28 NOVEMBER 2024 16:05:25)