UNCONTROLLED DOCUMENT



MNB B734SF
MNG Cargo B737-400SF

Revision: 2
Date: 13 November 2024

1 MNG Cargo Boeing 737-400SF Registrations
2 Aircraft Dimensions
3 Aircraft Servicing Points and Specifications
4 Ground Support Equipment
5 Standard Turnaround Times
6 Safety Areas
7 Strong Wind Conditions
8 Aircraft Door Dimensions
9 Compartment Classification and Air-Conditioning
10 Aircraft Cabin Contour Dimensions
11 Maximum Position Weights
12 Aircraft ULD Compatibility
13 Loading and Un-Loading
14 Rigid, Oversized and Special Loads
15 Restricted Commodities Loading
16 Messaging and Reporting
17 Load Control Data
18 Maximum Package Dimensions

UNCONTROLLED DOCUMENT

UNCONTROLLED DOCUMENT

Page	Date	Comment
13	13 November 2024	ULD types no longer in the network removed. *(Minor)*
15	13 November 2024	Guidance on the handling of special loads information added. *(Minor)*

UNCONTROLLED DOCUMENT

UNCONTROLLED DOCUMENT

1. MNG Cargo Boeing 737-400SF Registrations

IATA Designator:	MB
ICAO Designator:	MNB
Valid for:	**TCMCF**

UNCONTROLLED DOCUMENT
UNCONTROLLED DOCUMENT

UNCONTROLLED DOCUMENT

2. Aircraft Dimensions

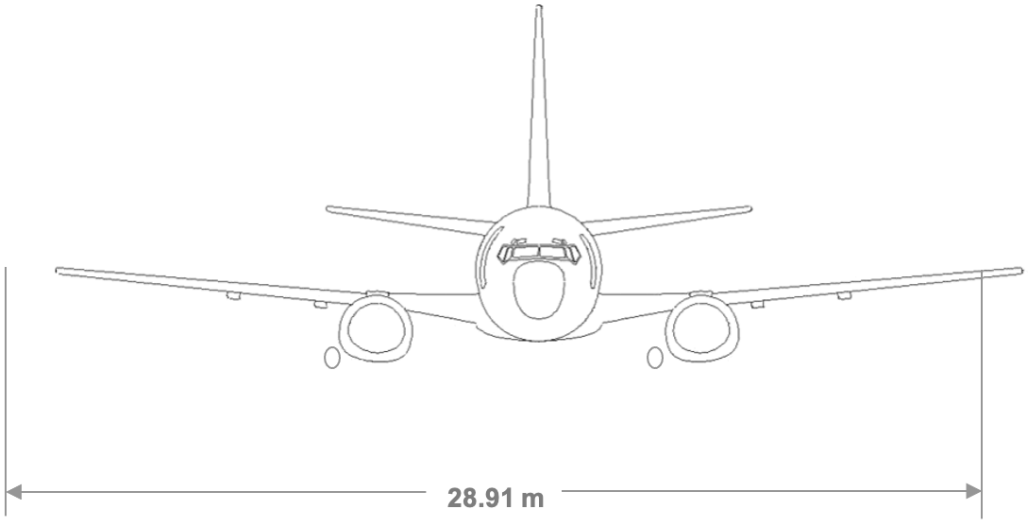

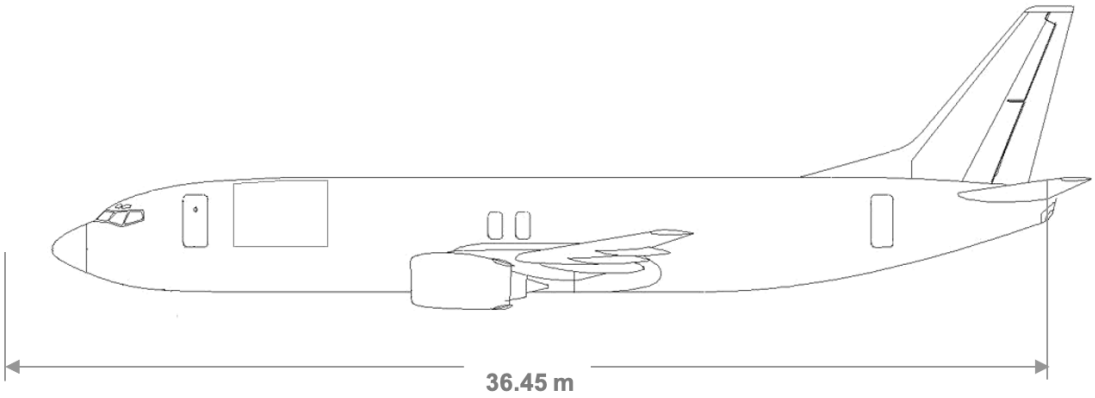

UNCONTROLLED DOCUMENT

UNCONTROLLED DOCUMENT

UNCONTROLLED DOCUMENT (13 NOVEMBER 2024 15:59:55)

UNCONTROLLED DOCUMENT

UNCONTROLLED DOCUMENT

UNCONTROLLED DOCUMENT

3. Aircraft Servicing Points and Specifications

3.1 Servicing Points

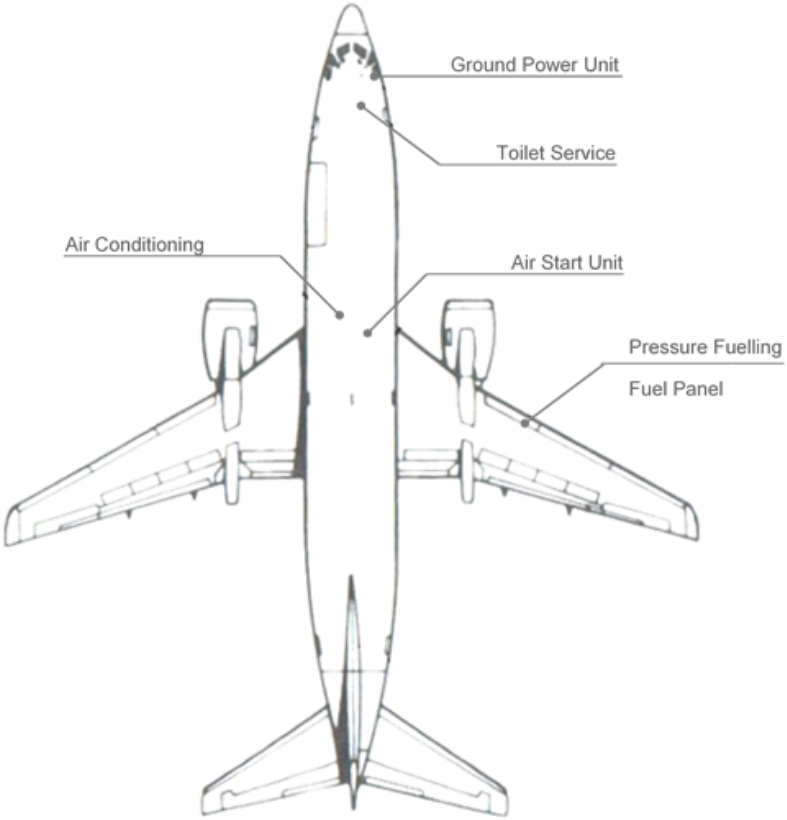

3.2 Servicing Specifications

System	Requirements	Notes
Ground Power Unit	115/200V AC / 60 kVA / 400 Hz	
Fuel	Jet A1	Fuel Control Panel **on RH wing only**
Air Condition Unit	Maximum Flow Rate 210 ppm	1 ACU inlet available
Air Start Unit	Minimum Capacity 120-145 ppm Max. / Min. pressure 45 / 30 psi	1 ASU inlet available.

UNCONTROLLED DOCUMENT (13 NOVEMBER 2024 15:59:55)

UNCONTROLLED DOCUMENT

4. Ground Support Equipment

4.1 Positioning of GSE

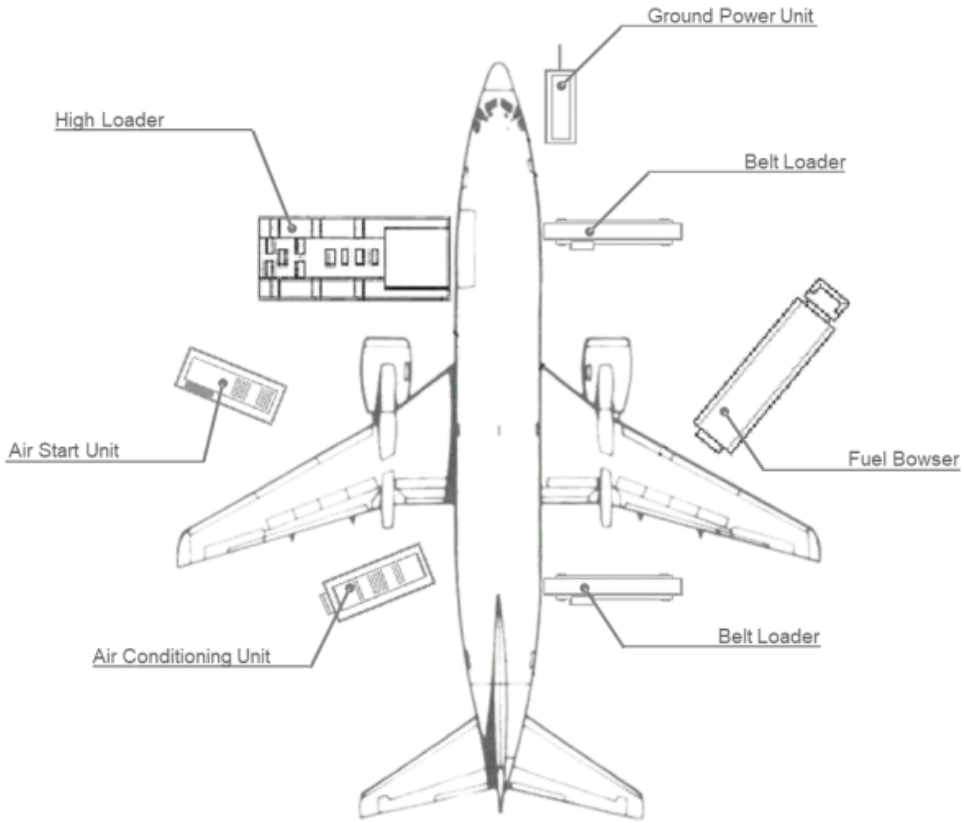

4.2 GSE Requirements

GSE	Type	Quantity
High Loader	Standard	1
Crew stairs	Platform height 2.62 – 2.77 meters	1
Ground Power Unit	Diesel, Electric or Ground-Power	1
Air Start Unit	Standard	1
Belt Loader	Standard	1 or 2
Tractor	N/A	4
Dolly Wagon Main-deck	125”/88” & 60.5”/61.4” capable	Up to 11
Belly Container / Wagon	As required	According to load

=

UNCONTROLLED DOCUMENT (13 NOVEMBER 2024 15:59:55)

UNCONTROLLED DOCUMENT

5. Standard Turnaround Times

Turn-around time for a transit stop:	00:35 hour (partial off- and on-load)
Turn-around time for an end stop:	00:50 hour (full off- and on-load)

UNCONTROLLED DOCUMENT

UNCONTROLLED DOCUMENT

UNCONTROLLED DOCUMENT (13 NOVEMBER 2024 15:59:55)

6. Safety Areas

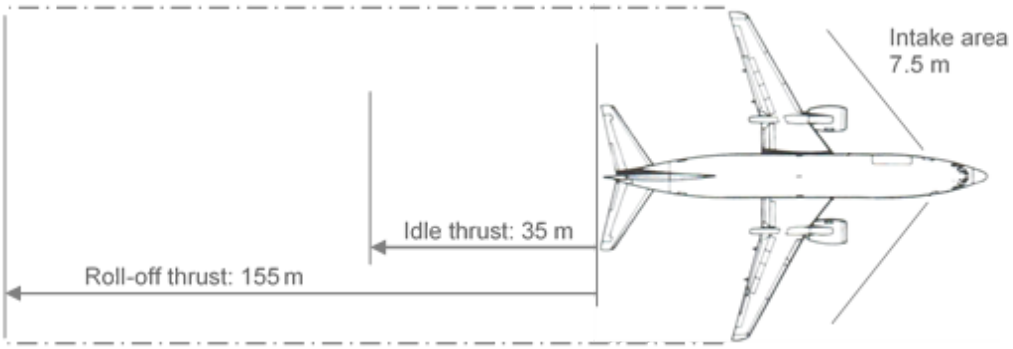

UNCONTROLLED DOCUMENT
UNCONTROLLED DOCUMENT

UNCONTROLLED DOCUMENT (13 NOVEMBER 2024 15:59:55)

UNCONTROLLED DOCUMENT

7. Strong Wind Conditions

If the wind conditions on the ramp reach the following speeds, the corresponding actions shall be taken.

Wind Speed	Action
Up to 40 knots	Normal Operations: All doors can be opened and left open
More than 40 knots	Do not open additional doors
More than 40 knots	All open doors shall be closed immediately

UNCONTROLLED DOCUMENT

UNCONTROLLED DOCUMENT

UNCONTROLLED DOCUMENT (13 NOVEMBER 2024 15:59:55)

8. Aircraft Door Dimensions

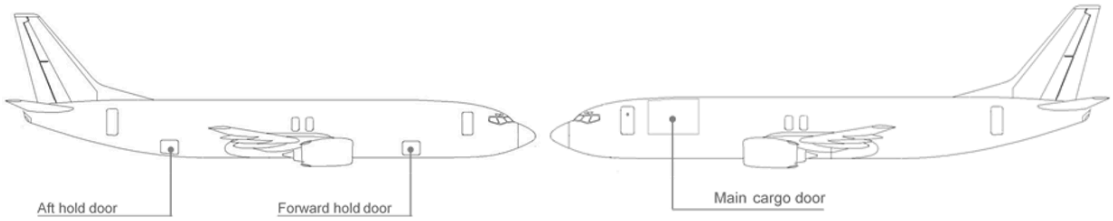

Door width, height, and sill height are defined as follows.

(This drawing is for illustration purposes only and may not be an exact representation of this aircraft type)

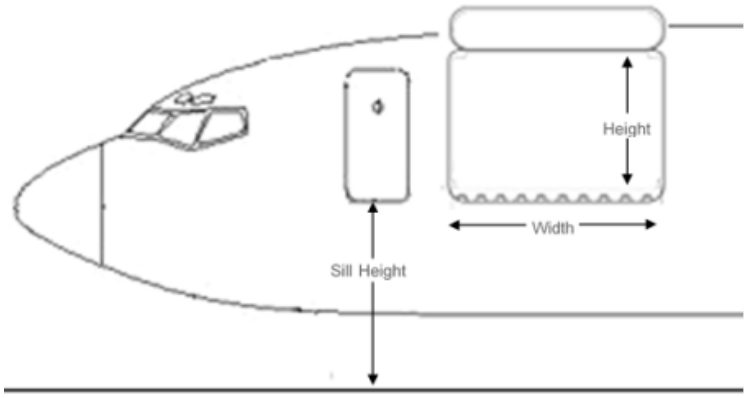

All dimensions are in centimetres (cm).

Door	Door Width	Door Height	Min. Door Sill Height	Max. Door Sill Height
Crew Door	-	-	262	277
Main Deck	347	215	265	280
Forward Hold	121	89	127	140
Aft Hold	121	89*	137	137

Note: *Door is angled. Measurement is at forward side of door; aft side is lower.

UNCONTROLLED DOCUMENT
UNCONTROLLED DOCUMENT

UNCONTROLLED DOCUMENT (13 NOVEMBER 2024 15:59:55)

UNCONTROLLED DOCUMENT

9. Compartment Classification and Air-Conditioning

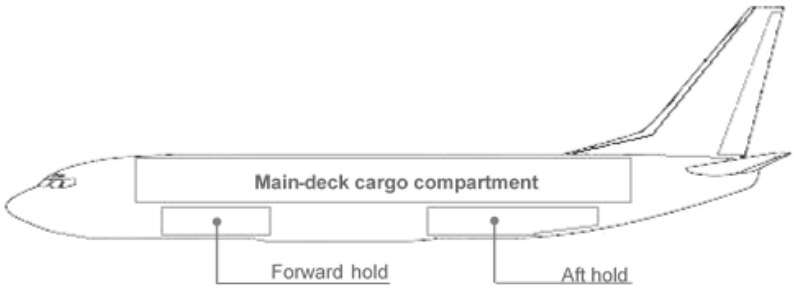

9.1 Compartment Classification

Compartment		Features
Main-deck	Position A loaded with 88" ULD **with** 50 cm (18") aisle	- Classification B
		- Pressurisation
		- Smoke Detection
		- Accessible during flight
	Position A loaded with 88" ULD **without** 50 cm (18") aisle	- Classification E
		- Pressurisation
		- Smoke Detection
		- In-accessible during flight
Lower-deck All Compartments	- Classification C	
	- Pressurisation	
	- Smoke Detection	
	- Fire Suppression	
	- In-accessible during flight	

9.2 Air-Conditioning

	Main-deck	Forward Hold	Aft Hold
Temperature	1C to 22C	Max 3C*	Max 3C*
Heating	Yes	No	
Heat adjust			
Cooling			
Ventilation		Yes	

*Temperature in the Forward and Aft Holds depend on the Main-deck heating but will never be more than 3C. No separate heating of the lower-deck.

UNCONTROLLED DOCUMENT (13 NOVEMBER 2024 15:59:55)

UNCONTROLLED DOCUMENT

10. Aircraft Cabin Contour Dimensions

10.1 Aircraft Layout Type 1

The aircraft is divided into three contour zones: CI, CII & CIII

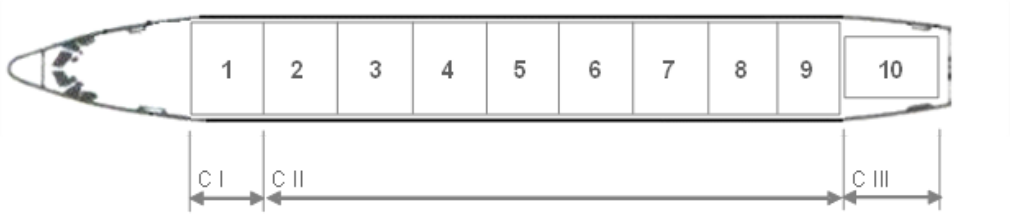

10.1.1 Contour I

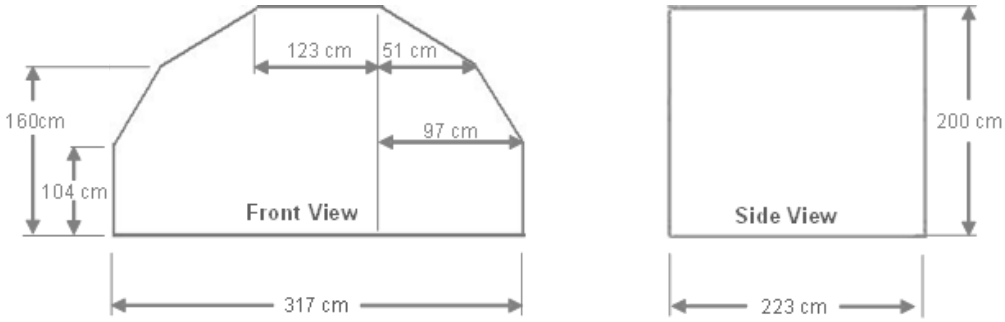

10.1.2 Contour II

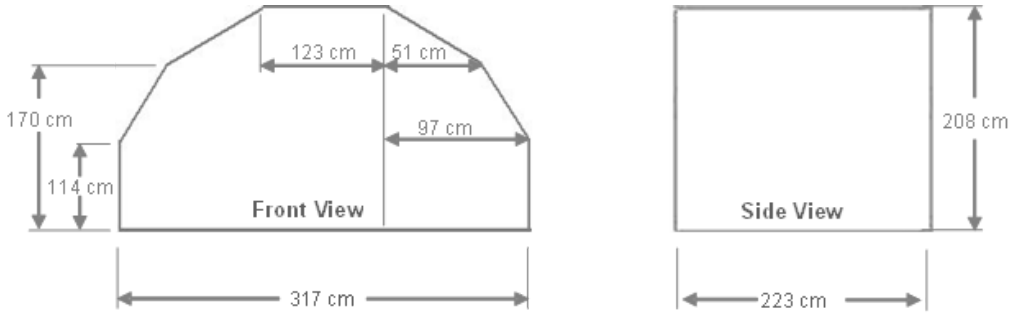

10.1.3 Contour III

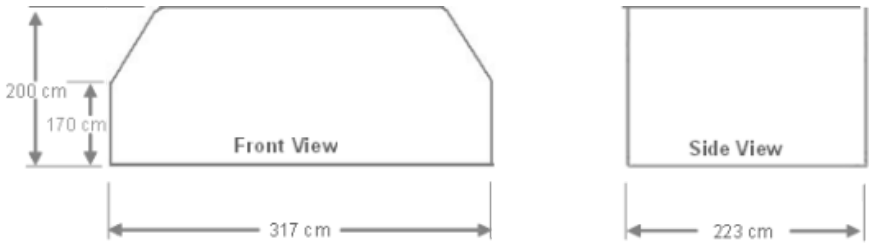

UNCONTROLLED DOCUMENT (13 NOVEMBER 2024 15:59:55)

11. Maximum Position Weights

11.1 Maximum Main-deck ULD Weights in Kilograms

	ULD Position									
ULD Size	1	2	3	4	5	6	7	8	9	10
125”/ 88”	1814	2948			3628		2948			1841
108”/88”	1270	2041			2494		2041			1841

11.2 Maximum Total Main-deck Load

9G Barrier Limit: 20233 Kg (Limited by 9g barrier net)

20055 Kg (limited by 2+2 crew members)

11.3 Maximum Lower-deck Compartment Weights in Kilograms

	Forward hold			Aft hold		
Compartment	B1A	B1B	B2	B3	B4	B5
Max. Weight per section	750	450	2050	1950	300	550
Max. Weight per Hold	3250			2800		
Volume (m3)	17.2			21.7		

UNCONTROLLED DOCUMENT
UNCONTROLLED DOCUMENT

UNCONTROLLED DOCUMENT (13 NOVEMBER 2024 15:59:55)

12. Aircraft ULD Compatibility

12.1 Aircraft Layout



Configuration 1: 9 Lateral and 1 Longitudinal 125”/88” positions

Configuration 2: 9 Lateral and 1 Longitudinal 108”/88” positions

12.2 ULD Compatibility Table

The following ULD type loading restrictions apply. The ULD type can be loaded on positions marked with a ‘Y’. The ULD type cannot be loaded on positions marked with a ‘N’.

		ULD Type								
	Pos	AAA	AAC	AAJ	ABD	ABU	LAK	LAY	PAG	PBJ
Configuration 1	1	Y	Y1	Y	N	N	Y	Y	Y	N
	2	Y	Y1	Y	N	N	Y	Y	Y	N
	3	Y	Y1	Y	N	N	Y	Y	Y	N
	4	Y	Y1	Y	N	N	Y	Y	Y	N
	5	Y	Y1	Y	N	N	Y	Y	Y	N
	6	Y	Y1	Y	N	N	Y	Y	Y	N
	7	Y	Y1	Y	N	N	Y	Y	Y	N
	8	Y	Y1	Y	N	N	Y	Y	Y	N
	9	Y	Y1	Y	N	N	Y	Y	Y	N
	10	N	N	Y	N	N	Y	N	Y	N
Configuration 2	1	N	N	N	Y	Y	N	N	N	Y
	2	N	N	N	Y	Y	N	N	N	Y
	3	N	N	N	Y	Y	N	N	N	Y
	4	N	N	N	Y	Y	N	N	N	Y
	5	N	N	N	Y	Y	N	N	N	Y
	6	N	N	N	Y	Y	N	N	N	Y
	7	N	N	N	Y	Y	N	N	N	Y
	8	N	N	N	Y	Y	N	N	N	Y
	9	N	N	N	Y	Y	N	N	N	Y
	10	N	N	N	Y	Y	N	N	N	Y

Y1: Only AAC serial range 9021 and higher allowed

Note: Pallet stacks must not be loaded on to position 9 as this can cause damage inside of the fuselage during flight.

UNCONTROLLED DOCUMENT
UNCONTROLLED DOCUMENT

UNCONTROLLED DOCUMENT (13 NOVEMBER 2024 15:59:55)

13. Loading and Un-Loading

13.1 Un-Loading Sequence

Step 1: Un-load the aft lower deck.

Step 2: Un-load the ULDs on the main deck in the following numbered sequence, **and respect standard stage un-loading method**.



Step 3: Un-load the forward lower deck.

13.2 Loading Sequence

Step 1: Load the forward lower deck.

Step 2: Load the ULDs on the main deck in the following numbered sequence, **and respect standard stage loading method**.



Step 3: Load the aft lower deck.

13.3 Loading Notes

13.3.1 Tail-Tipping

This aircraft type is susceptible to tail-tipping. To prevent tail-tipping due to a sudden CoG shift, the prescribed un-loading and loading sequences must be strictly adhered to and ULDs must be moved on the aircraft at a slow pace.

13.3.2 Tail Post

This aircraft type is not fitted for or does not require a tail post.

13.3.3 Parallel Dolly-train Un-load

Parallel dolly-train un-load is not permitted.

13.3.4 ULD Clearance

There is very limited clearance between some ULDs and the inner roof lining on this aircraft. ULDs, AAA and AAC/LAY especially, which are even slightly out of contour will impact the roof lining and cause damage. Due care must therefore be exercised when un-loading and loading this aircraft.

UNCONTROLLED DOCUMENT
UNCONTROLLED DOCUMENT

UNCONTROLLED DOCUMENT (13 NOVEMBER 2024 15:59:55)

14. Rigid, Oversized and Special Loads

For guidance on the handling of special loads, please refer to the Special Loads Regional Contact Instructions outlined in Chapter 6 **6.12.22.3 - Determining Loadability of Special Loads**. Where direct operator approval is required, the Regional Airside Team will liaise with Global Airside as needed.

14.1 Floating / Heavy Pallets

Floating ULDs are not allowed on MNG Cargo flights.

14.2 Crushable Cargo Requirements

If Rigid cargo is loaded on the aircraft, the first loaded position on the aircraft must be occupied with a Crushable Cargo loaded ULD suitable for protecting the barrier wall against unrestrained Rigid Cargo.

14.3 Piercing Cargo

Piercing cargo may not be loaded on the first and last loaded position on the aircraft.

14.4 Aircraft Engines

Aircraft engines shall be loaded in positions 2-9 only.

The ability to load aircraft engines depends on actual size and weight. The biggest engine which can be loaded on this aircraft is the CFM56-3.

Permission must be sought from your Special Loads Regional Contact before accepting aircraft engines of any type.

14.5 Live Animals

14.5.1 Horses

Horses shall not be loaded on this aircraft.

UNCONTROLLED DOCUMENT
UNCONTROLLED DOCUMENT

UNCONTROLLED DOCUMENT (13 NOVEMBER 2024 15:59:55)

14.5.2 Other Live Animals

The following table provides a list of commonly transported animals. If there is a requirement to transport animals not listed below, contact your Special Loads Regional Contact.

<table>
<tr><th></th><th>Main-Deck</th><th>FWD Hold</th><th>AFT Hold</th></tr>
<tr><td>Horses</td><td>No</td><td colspan="2" rowspan="5">No</td></tr>
<tr><td>Day-old chickens</td><td>X</td></tr>
<tr><td>Monkeys</td><td rowspan="12">X</td></tr>
<tr><td>Pigs</td></tr>
<tr><td>Cattle</td></tr>
<tr><td>Sheep or Goats</td><td colspan="2" rowspan="7">X</td></tr>
<tr><td>Dogs or Cats</td></tr>
<tr><td>Small mammals or Birds</td></tr>
<tr><td>Tropical Fish</td></tr>
<tr><td>Reptiles or Amphibians</td></tr>
<tr><td>Eels</td></tr>
<tr><td>Crustaceans or Molluscs</td></tr>
<tr><td>Bees</td></tr>
<tr><td>Hatching eggs</td></tr>
</table>

X: Depends on accessibility, air conditioning and flight duration. Contact your Special Loads Regional Contact for more details.

UNCONTROLLED DOCUMENT
UNCONTROLLED DOCUMENT

UNCONTROLLED DOCUMENT (13 NOVEMBER 2024 15:59:55)

15. Restricted Commodities Loading

15.1 Radioactive (RRY), Magnetised (MAG) and Cargo Aircraft Only (CAO)

The following Dangerous Good type loading restrictions apply. The Dangerous Good type can be loaded on positions marked with a 'Y'. The Dangerous Good type cannot be loaded on positions marked with a 'N'.

	Position											
DG Type	1	2	3	4	5	6	7	8	9	10	FWD	AFT
MAG	N	N	N	N	N	N	N	N	Y	Y	N	N
CAO	Y	Y	Y	Y	Y	Y	Y	Y	Y	N	Y	Y
RRY (max. 50 TI combined)	N	N	Y	Y	Y	Y	Y	Y	Y	Y	N	N
RRY (max. 200 TI combined)	N	N	N	N	Y	Y	Y	Y	Y	Y	N	N

Note: Cargo Aircraft Only (CAO) can be loaded on any Main Deck position 1 to 9 provided they are loaded accessible. Accessible means that:

- The CAO is loaded on a pallet
- All positions forward of the CAO are loaded with 88" pallets with aisle

15.2 Dry Ice

Please see the Global Supplementary Operational Document **Dry Ice Consolidation table** for the current maximum allowed Dry Ice limits.

Dry Ice (ICE) and Live Animals (AVI)

There is no weight limit for the loading of Dry Ice (ICE) together with Live Animals (AVI) on the Main-deck.

15.3 Lithium Batteries

Please see the Global Supplementary Operational Document **Lithium Battery Loadability Consolidation Table** for the current UN3480 Section IA/IB (RBI), UN3090 Section IA/IB (RBM), UN3481 Section I (RLI), UN3091 Section I (RLM) load ability limits.

UNCONTROLLED DOCUMENT
UNCONTROLLED DOCUMENT

UNCONTROLLED DOCUMENT (13 NOVEMBER 2024 15:59:55)

UNCONTROLLED DOCUMENT

16. Messaging and Reporting

16.1 Messaging

Standard messaging rules apply.

16.2 Reporting

Standard reporting rules apply.

UNCONTROLLED DOCUMENT

UNCONTROLLED DOCUMENT

UNCONTROLLED DOCUMENT (13 NOVEMBER 2024 15:59:55)

17. Load Control Data

17.1 Standard Mass Additions

17.1.1 Additional Crew Members (ACM)

Maximum Number of ACMs:	5
Mass of ACM:	89 kg

17.1.2 Fly Away Kit (FAK) and Ballast

Fly Away Kit (FAK):	Not as standard.
Ballast:	Not as standard.

17.2 Minimum Fuel and Standard Taxi Fuel

Minimum Fuel:	2500 Kg
Standard Taxi Fuel:	200 kg

17.3 LMC Restrictions

Payload Maximum LMC:	+/- 1000 kg (incl. additional crew members)

UNCONTROLLED DOCUMENT
UNCONTROLLED DOCUMENT

UNCONTROLLED DOCUMENT (13 NOVEMBER 2024 15:59:55)

UNCONTROLLED DOCUMENT

18. Maximum Package Dimensions

18.1 Main Cargo Door

	WIDTH (IN.)												
	5	15	25	35	45	55	65	75	85	95	105	115	125
HEIGHT (IN.)	LENGTH (IN.)												
83	190	190	190	190	181	164	151						
80	190	190	190	190	190	181	165	152					
76	190	190	190	190	190	190	181	166	153				
72	190	190	190	190	190	190	190	178	164	152			
68	190	190	190	190	190	190	190	188	172	158			
64	190	190	190	190	190	190	190	190	180	165	153		
60	190	190	190	190	190	190	190	190	187	171	158	147	
56	190	190	190	190	190	190	190	190	190	176	162	151	
52	190	190	190	190	190	190	190	190	190	180	165	153	137
48	190	190	190	190	190	190	190	190	190	180	165	153	137
44	190	190	190	190	190	190	190	190	190	180	165	153	137
40	190	190	190	190	190	190	190	190	190	180	165	153	137
36	190	190	190	190	190	190	190	190	190	180	165	153	137
32	190	190	190	190	190	190	190	190	190	180	165	153	137
28	190	190	190	190	190	190	190	190	190	180	165	153	137
24	190	190	190	190	190	190	190	190	190	180	165	153	137
20	190	190	190	190	190	190	190	190	190	180	165	153	137
16	190	190	190	190	190	190	190	190	190	180	165	153	137
12	190	190	190	190	190	190	190	190	190	180	165	153	137
8	190	190	190	190	190	190	190	190	190	180	165	153	137
4	190	190	190	190	190	190	190	190	190	180	165	153	137
2	190	190	190	190	190	190	190	190	190	180	165	153	137

NOTE: Subtract roller height and pallet thickness if applicable.

Note:

Multiply numbers by 2.54 to get centimetres

UNCONTROLLED DOCUMENT (13 NOVEMBER 2024 15:59:55)

UNCONTROLLED DOCUMENT

UNCONTROLLED DOCUMENT

UNCONTROLLED DOCUMENT

18.2 Forward Lower-deck Hold

LIGHT PACKAGES HAND MANEUVERED[a]									
HEIGHT IN.	WIDTH IN.								
	5	10	15	20	25	30	35	40	45
	LENGTH IN.								
5	175	143	121	106	95	84	74	65	58
10	155	132	116	105	95	84	74	65	58
12	150	130	116	105	95	84	74	65	58
14	147	129	115	105	95	84	74	65	58
16	144	127	115	105	95	84	74	65	58
18	142	126	115	105	95	84	74	65	58
20	140	126	115	105	95	84	74	65	58
22	139	125	115	105	95	84	74	65	58
24	138	125	115	105	95	84	74	65	58
26	137	125	115	105	95	84	74	65	58
28	137	125	115	105	95	84	74	65	58
30	136	125	115	105	95	84	74	65	58
32	136	125	115	105	95	84	74	65	58
34	136	125	115	105	95	84	74	65	58

[a] Package length is limited to a maximum of 85 inches when transverse cargo nets are installed.

18.3 Aft Lower-deck Hold

LIGHT PACKAGES HAND MANEUVERED[a]									
HEIGHT IN.	WIDTH IN.								
	5	10	15	20	25	30	35	40	45
	LENGTH IN.								
5	247	184	147	123	106	93	83	73	65
10	192	157	133	116	104	93	83	73	65
12	182	151	130	115	104	93	83	73	65
14	174	147	128	114	104	93	83	73	65
16	168	144	127	114	104	93	83	73	65
18	164	142	126	114	104	93	83	73	65
20	160	140	125	114	104	93	83	73	65
22	157	138	124	114	104	93	83	73	65
24	155	137	124	114	104	93	83	73	65
26	153	137	124	114	104	93	83	73	65
28	152	136	124	114	104	93	83	73	65
30	151	135	124	114	104	93	83	73	65
32	150	135	124	114					
34	149	135	124	114					

[a] Package length is limited to a maximum of 161 inches when transverse cargo nets are installed.

UNCONTROLLED DOCUMENT (13 NOVEMBER 2024 15:59:55)