UNCONTROLLED DOCUMENT



SRR B777F
Maersk Air B777F

Revision: 3
Date: 28 November 2024

1 Maersk Air B777F Registrations
2 Aircraft Dimensions
3 Aircraft Servicing Points and Specifications
4 Ground Support Equipment
5 Standard Turnaround Times
6 Safety Areas
7 Strong Wind Conditions
8 Aircraft Door Dimensions
9 Operating Aircraft Doors
10 Compartment Classification and Air-Conditioning
11 Aircraft Cabin Contour Dimensions
12 Maximum Position Weights
13 Aircraft ULD Compatibility
14 Loading and Un-Loading
15 Rigid, Oversized and Special Loads
16 Restricted Commodities Loading
17 Messaging and Reporting
18 Load Control Data
19 Maximum Package Dimensions
20 Contour Drawings

UNCONTROLLED DOCUMENT

UNCONTROLLED DOCUMENT

Page	Date	Comment
35	28 November 2024	Global Airside replaced with Special Loads Regional contact. *(Minor)*

UNCONTROLLED DOCUMENT

UNCONTROLLED DOCUMENT

1. Maersk Air B777F Registrations

IATA Designator:	**DJ**
ICAO Designator:	**SRR**
Valid for:	**OYMAC, OYMAD**

UNCONTROLLED DOCUMENT
UNCONTROLLED DOCUMENT

2. Aircraft Dimensions

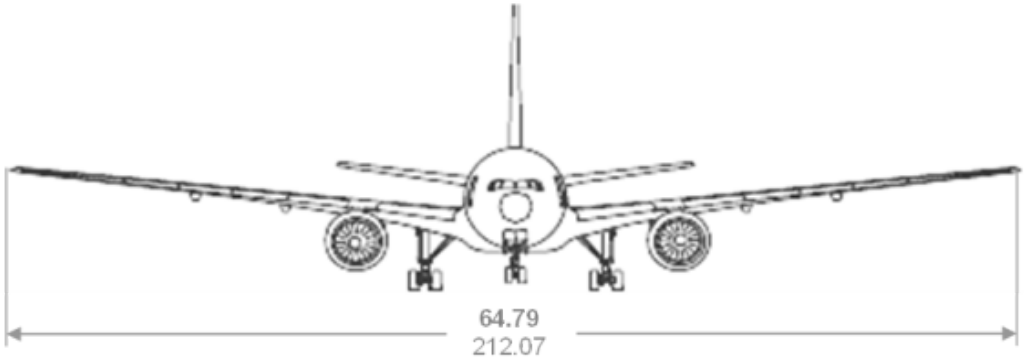

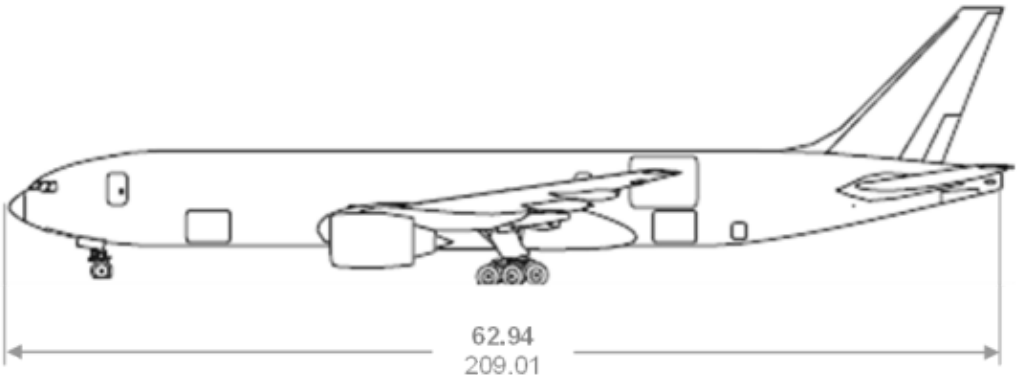

UNCONTROLLED DOCUMENT
UNCONTROLLED DOCUMENT

UNCONTROLLED DOCUMENT (28 NOVEMBER 2024 21:39:26)

UNCONTROLLED DOCUMENT

3. Aircraft Servicing Points and Specifications

3.1 Servicing Points

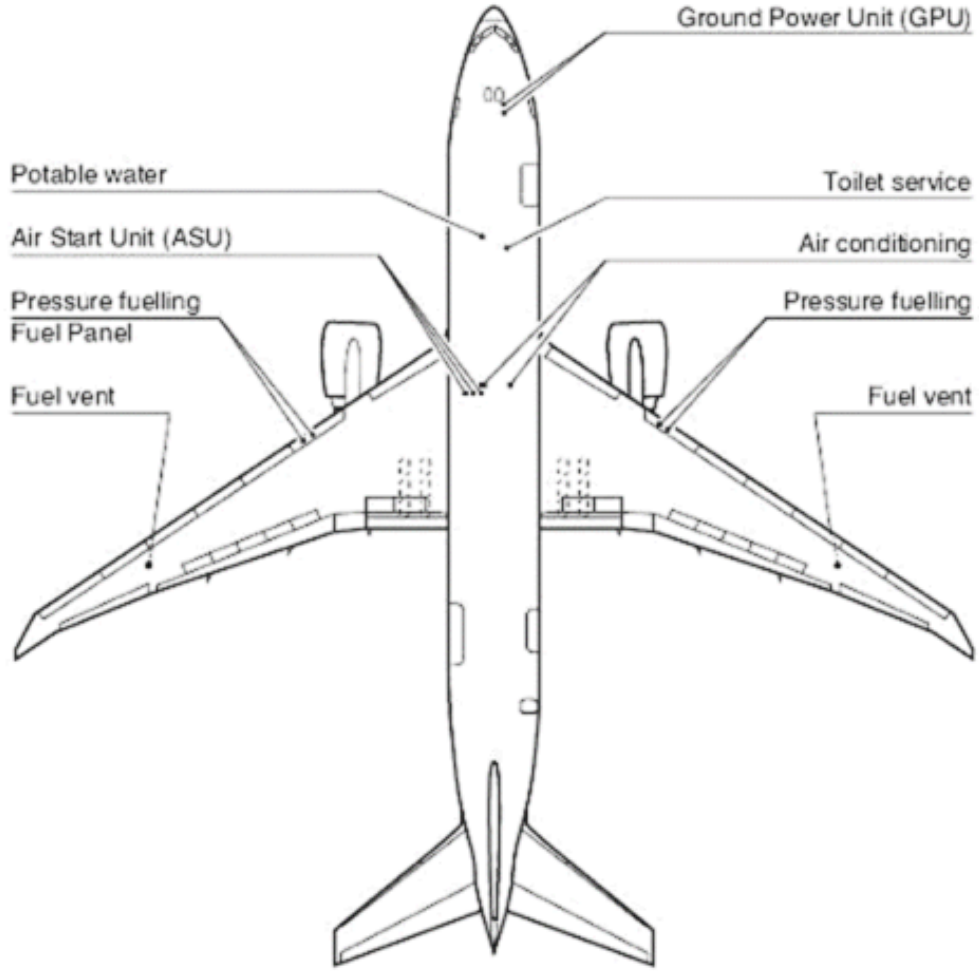

3.2 Servicing Specifications

System	Requirements	Notes
Ground Power Unit	115/200V AC / 90 kVA / 400 Hz	2 GPU connections required (2 x 90 kVA)
Fuel	Jet A1	Fuel Control Panel **on LH wing only**
Air Condition Unit	Maximum Flow Rate 1550 ppm	2 ACU inlets available
Air Start Unit	Minimum Capacity 375 ppm Pressure supply requirement: 30-45 psi Max. pressure 50 psi	3 ASU inlets available. ASU should preferably have two supply hoses 2 ASUs may be required, depending on flow rate and ambient air temperature. Never connect an ASU if an engine or the APU is running Use of bottled ASUs (compressed air start system) is not recommended

UNCONTROLLED DOCUMENT (28 NOVEMBER 2024 21:39:26)

4. Ground Support Equipment

4.1 Positioning of GSE

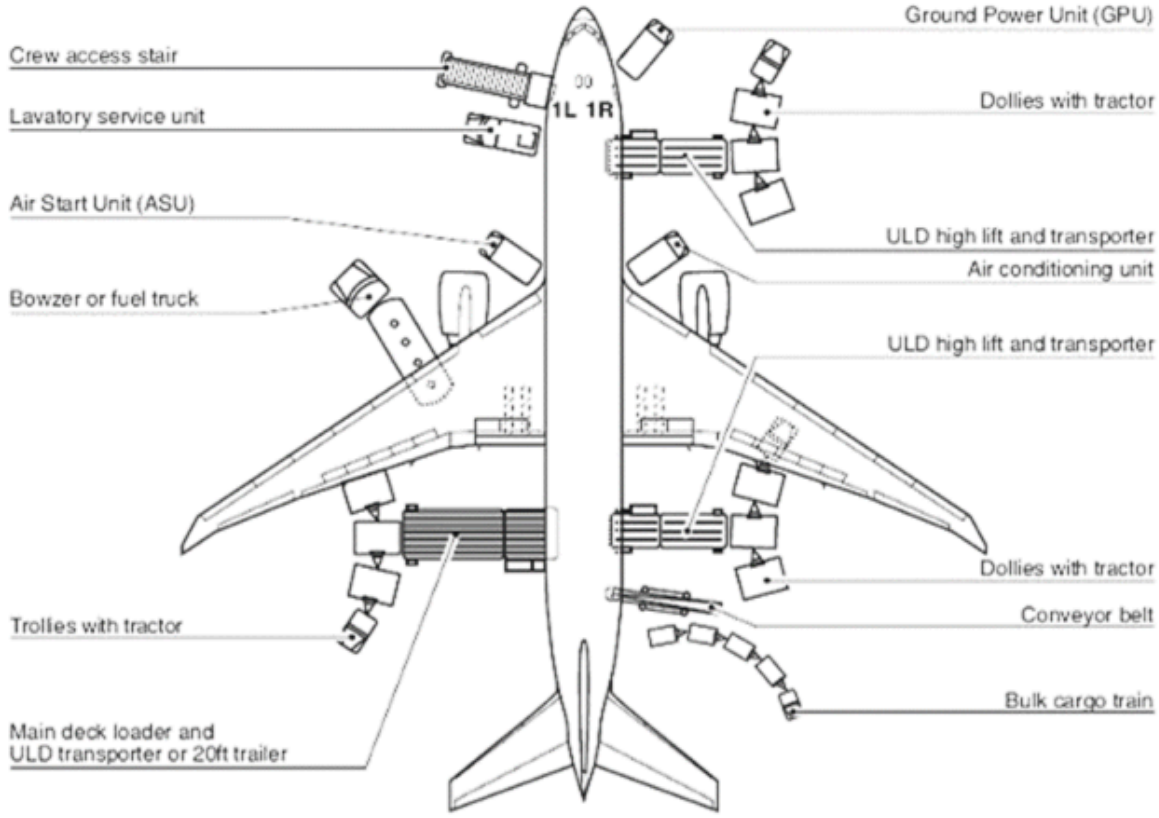

4.2 GSE Requirements

GSE	Type	Quantity
High Loader	Main-deck Standard	1 2
Crew stairs	Platform height 4.65 – 5.04 meters Note: Place top platform 20cm (8in) below sill level	1
Ground Power Unit	Diesel, Electric or Ground-Power	1
Belt Loader	Standard (9 meter recommended)	1
Tractor	N/A	6
Dolly Wagon Main-deck	125/88” and 125/96” capable	Up to 27
	16 & 20ft capable	Up to 9
Dolly Wagon Lower-deck	125/88” and 125/96” capable	Up to 10
	60.4/61.5” or 60.4/125” capable	Up to 15
Belly Container / Wagon	As required	According to load

UNCONTROLLED DOCUMENT
UNCONTROLLED DOCUMENT

UNCONTROLLED DOCUMENT (28 NOVEMBER 2024 21:39:26)

5. Standard Turnaround Times

DHL Stations

Turn-around time for a transit stop:	01:30 hour (partial off- and on-load)
Turn-around time for an end stop:	02:00 hour (full off- and on-load)

UNCONTROLLED DOCUMENT
UNCONTROLLED DOCUMENT

6. Safety Areas

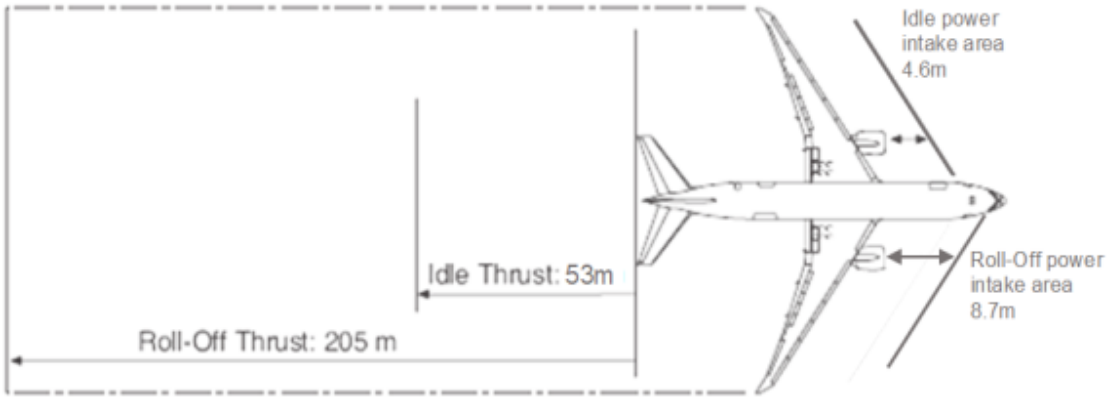

UNCONTROLLED DOCUMENT
UNCONTROLLED DOCUMENT

UNCONTROLLED DOCUMENT (28 NOVEMBER 2024 21:39:26)

UNCONTROLLED DOCUMENT

7. Strong Wind Conditions

If the wind conditions on the ramp reach the following speeds, the corresponding actions shall be taken.

Wind Speed	Action
Up to 40 knots	Normal Operations: All doors can be opened and left open
More than 40 knots	Do not open additional doors
More than 60 knots	All open doors shall be closed immediately

Note:

'Additional main gear chocking' shall take place in Strong Wind Conditions greater than 25 knots. The chocks shall be placed approximately 5cm (2in) from the wheels.

UNCONTROLLED DOCUMENT

UNCONTROLLED DOCUMENT

UNCONTROLLED DOCUMENT (28 NOVEMBER 2024 21:39:26)

8. Aircraft Door Dimensions

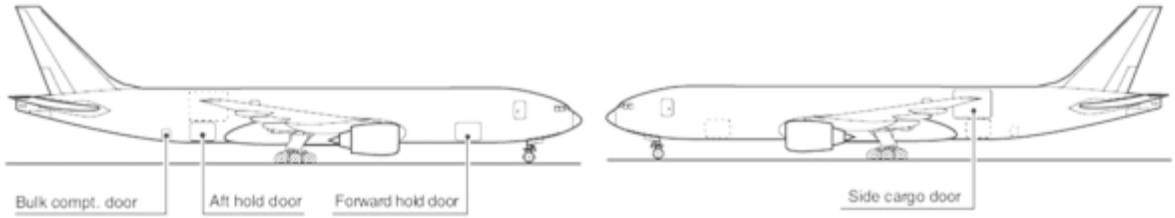

Door width, height, and sill height are defined as follows.

(This drawing is for illustration purposes only and may not be an exact representation of this aircraft type)

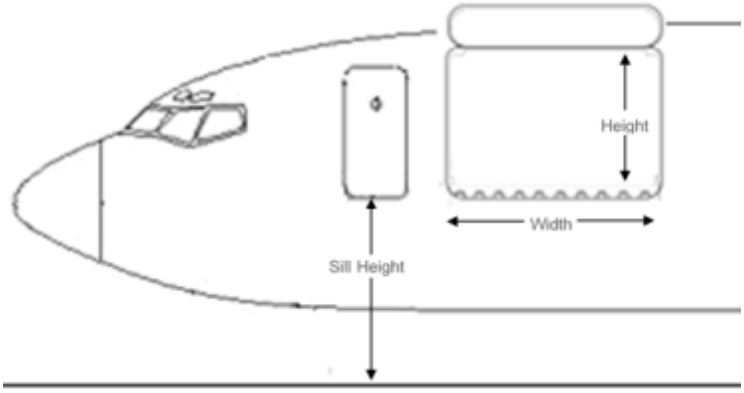

All dimensions are in centimetres and inches.

Door	Door Width		Door Height		Min. Door Sill Height		Max. Door Sill Height	
	CM	Inches	CM	Inches	CM	Inches	CM	Inches
Crew Door	-	-	-	-	465	183	504	198.4
Main Deck	362	142.5	305	120	529	208.3	553	217.7
Forward Hold	269	105.9	170	70	277	109	311	122.4
Aft Hold	289	113.8	170	70	332	130.7	356	140.2
Bulk Hold	90	35.4	121	47.6	350	137.8	378	148.8

Note:

The maximum height for a lower-deck ULD is 163 cm (64 inches).

UNCONTROLLED DOCUMENT
UNCONTROLLED DOCUMENT

UNCONTROLLED DOCUMENT (28 NOVEMBER 2024 21:39:26)

9. Operating Aircraft Doors

Only fully trained and certified staff are allowed to operate the Main Cargo Door.

There are two panels which may be used to operate the Main Cargo Door. One is located forward of the Main Cargo Door in the Main-deck cargo compartment, illustrated by this drawing:

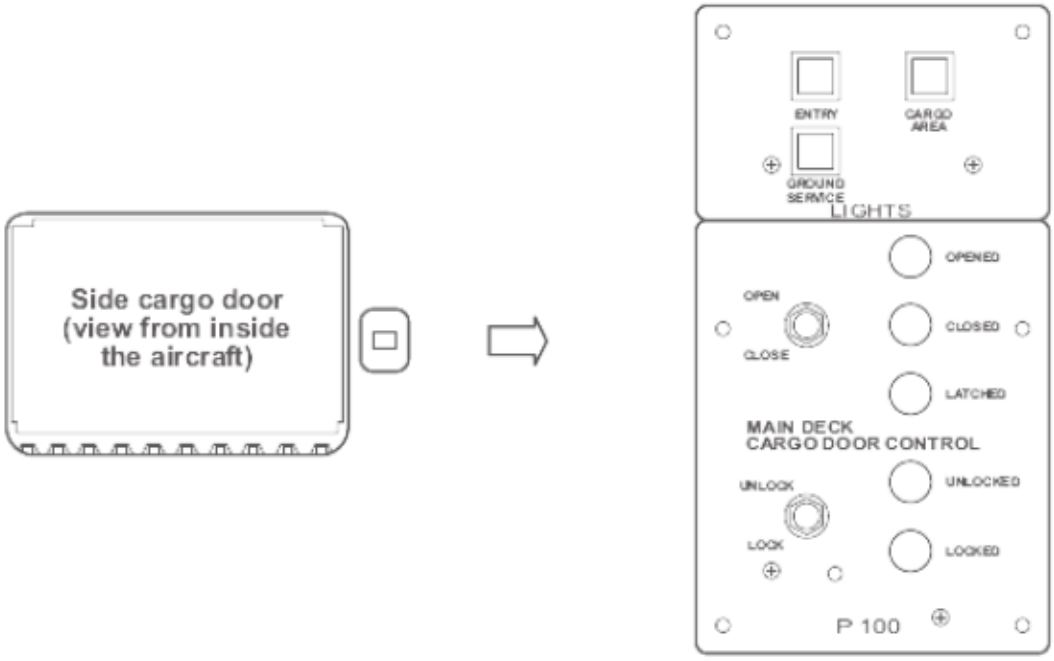

The other panel is located inside and forward of the L1 door.

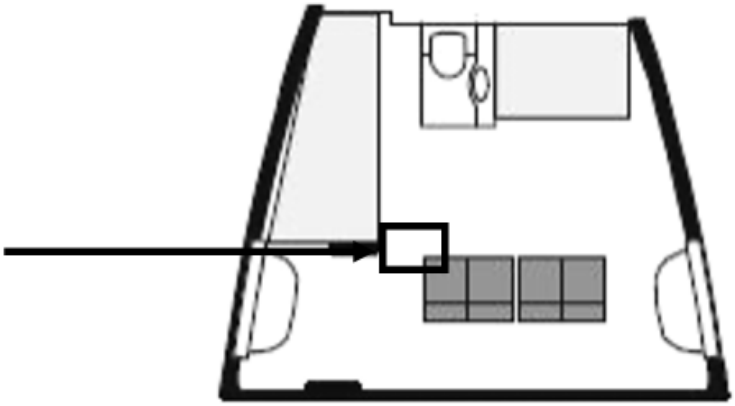

UNCONTROLLED DOCUMENT
UNCONTROLLED DOCUMENT

UNCONTROLLED DOCUMENT

10. Compartment Classification and Air-Conditioning

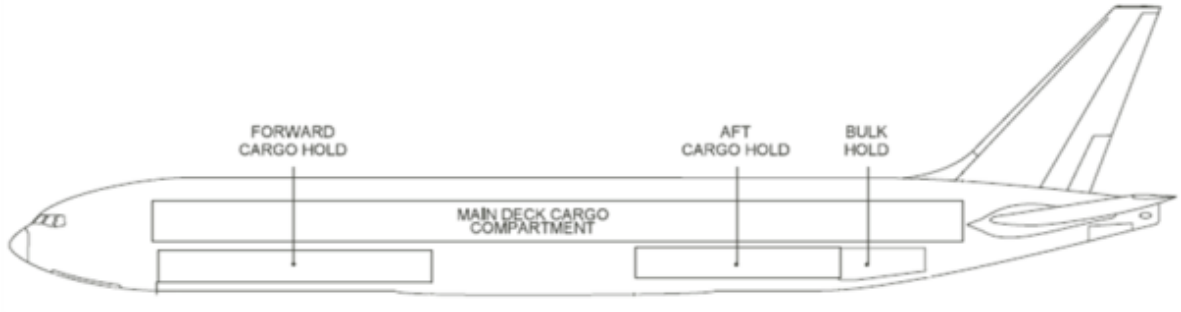

10.1 Compartment Classification

Compartment		Features
Main-deck	Positions AL & AR loaded with 88" ULD **or** 96" ULD **with** 25 cm (10") aisle	- Classification **B**
		- Pressurisation
		- Smoke Detection
		- **Accessible** during flight
	Positions AL & AR loaded with 96" ULD **without** 25 cm (10") aisle	- Classification **E**
		- Pressurisation
		- Smoke Detection
		- **In-accessible** during flight
Lower-deck Compartments 1, 2, 3, 4 and 5		- Classification **C**
		- Pressurisation
		- Smoke Detection
		- **In-accessible** during flight
		- Fire Suppression

10.2 Air-Conditioning

	Main-deck	Forward Hold	Aft Hold	Bulk Hold
Temperature	4C to 27C			
Heating	Yes			
Heat adjust	Yes			
Cooling	Yes			
Ventilation	Yes			

UNCONTROLLED DOCUMENT (28 NOVEMBER 2024 21:39:26)

11. Aircraft Cabin Contour Dimensions

11.1 Aircraft Layout

The aircraft is divided into three contour zones: JI, JIII and JIV.

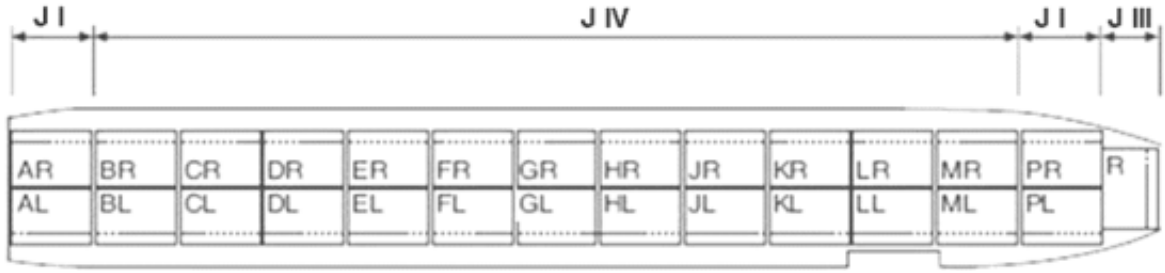

11.2 Contour J1

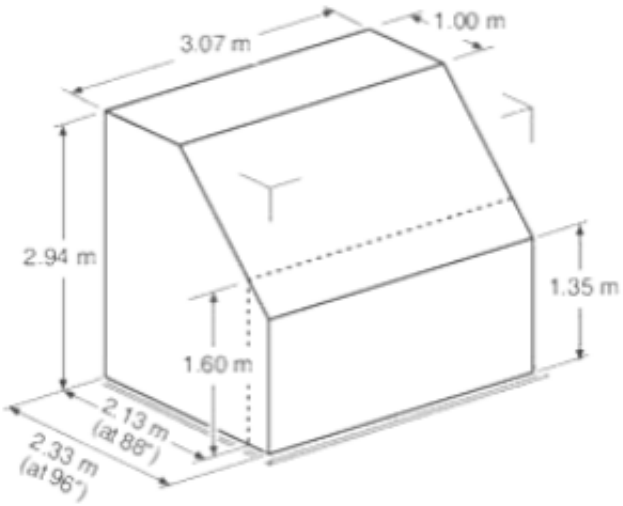

11.3 Contour JIII

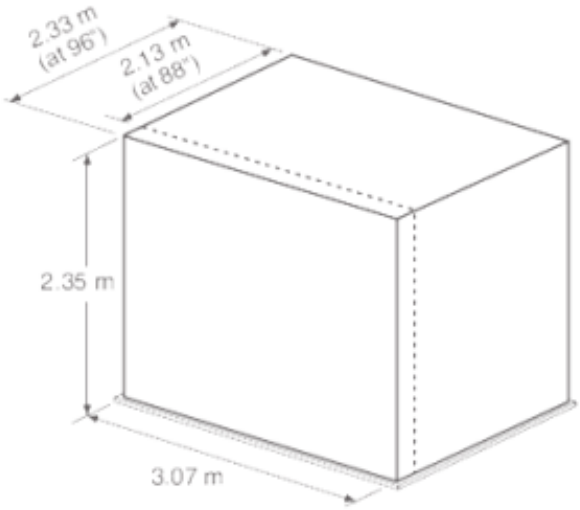

UNCONTROLLED DOCUMENT
UNCONTROLLED DOCUMENT

UNCONTROLLED DOCUMENT (28 NOVEMBER 2024 21:39:26)

UNCONTROLLED DOCUMENT

11.4 Contour JIV

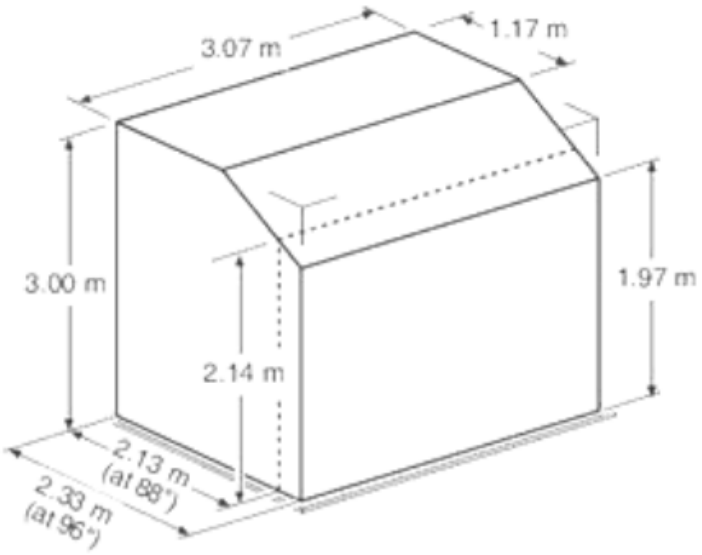

11.5 16’ and 20’ Pallet Position Contours

BL thru KL:

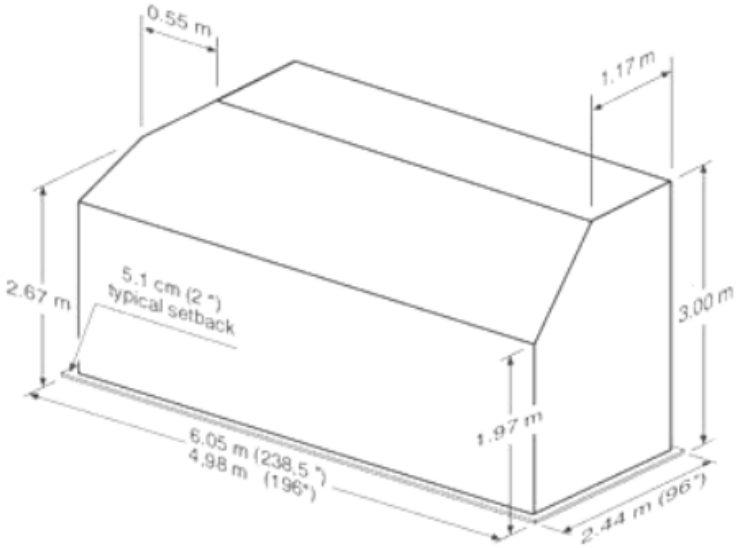

UNCONTROLLED DOCUMENT

UNCONTROLLED DOCUMENT (28 NOVEMBER 2024 21:39:26)

UNCONTROLLED DOCUMENT

BR thru KR, MR thru PR:

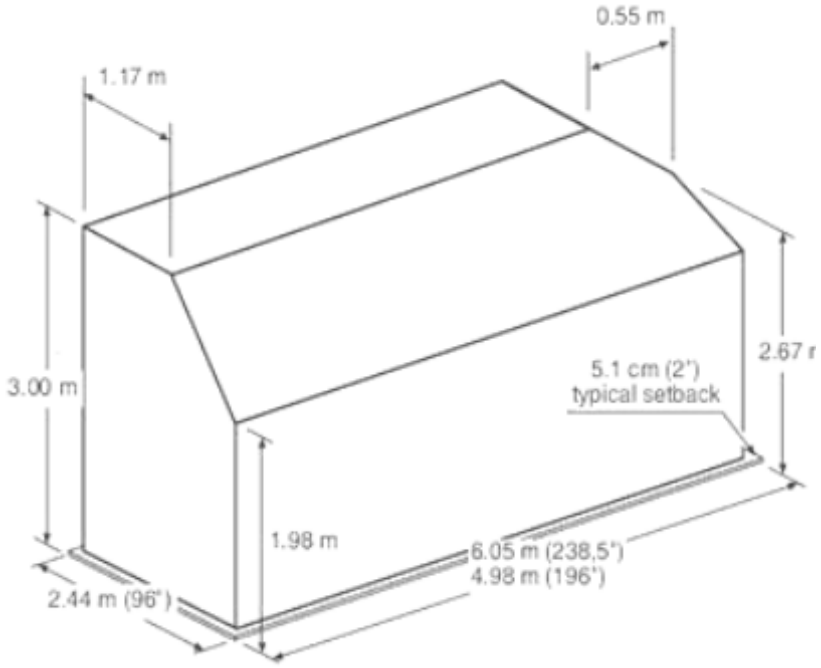

Note: BR thru KR, MR thru PR has the same contour but up to a maximum height of 2.9m.

Centre-Line positions EF, GH and JK:

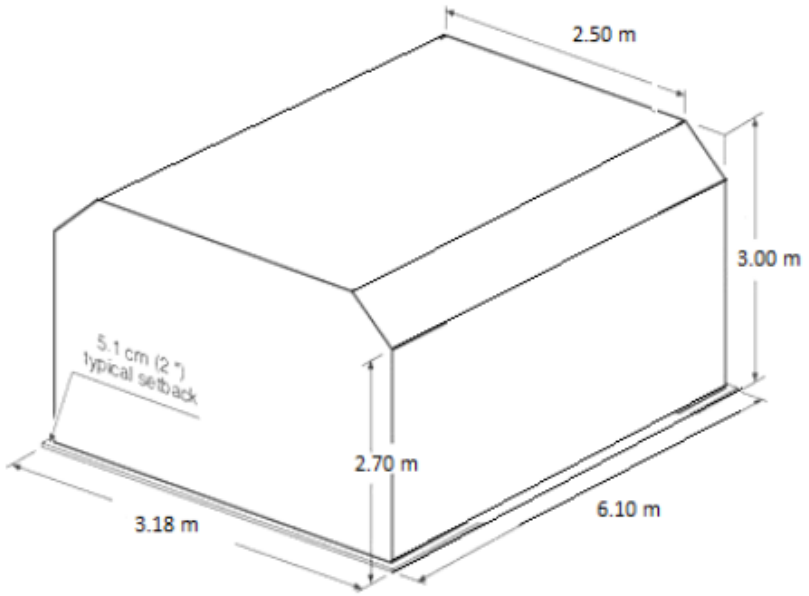

UNCONTROLLED DOCUMENT

UNCONTROLLED DOCUMENT (28 NOVEMBER 2024 21:39:26)

Laterally loaded 16' FL/FR, LL/LR and ML/MR:

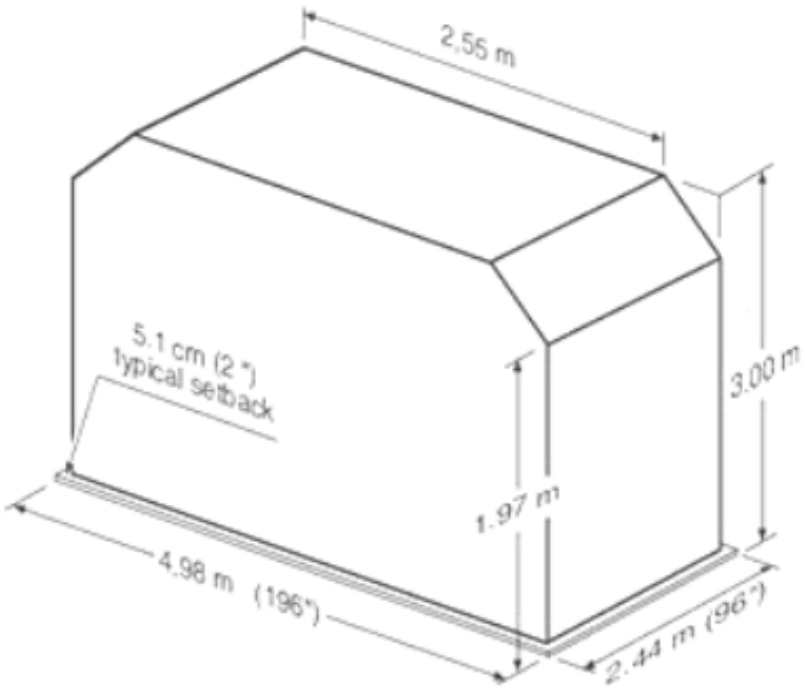

11.6 Centre-line 125"/96" ULD Position Contours:

Positions B to M. Position P has the same contour up to a maximum height of 2.85m.

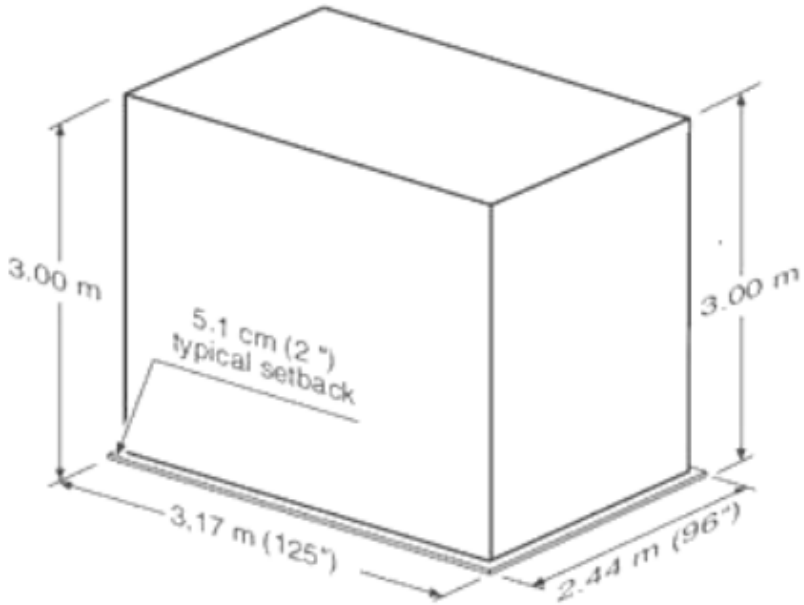

UNCONTROLLED DOCUMENT
UNCONTROLLED DOCUMENT

UNCONTROLLED DOCUMENT (28 NOVEMBER 2024 21:39:26)

UNCONTROLLED DOCUMENT

11.7 Lower Deck Compartment Dimensions

Aft Hold (Compartments 3, 4 & 5)

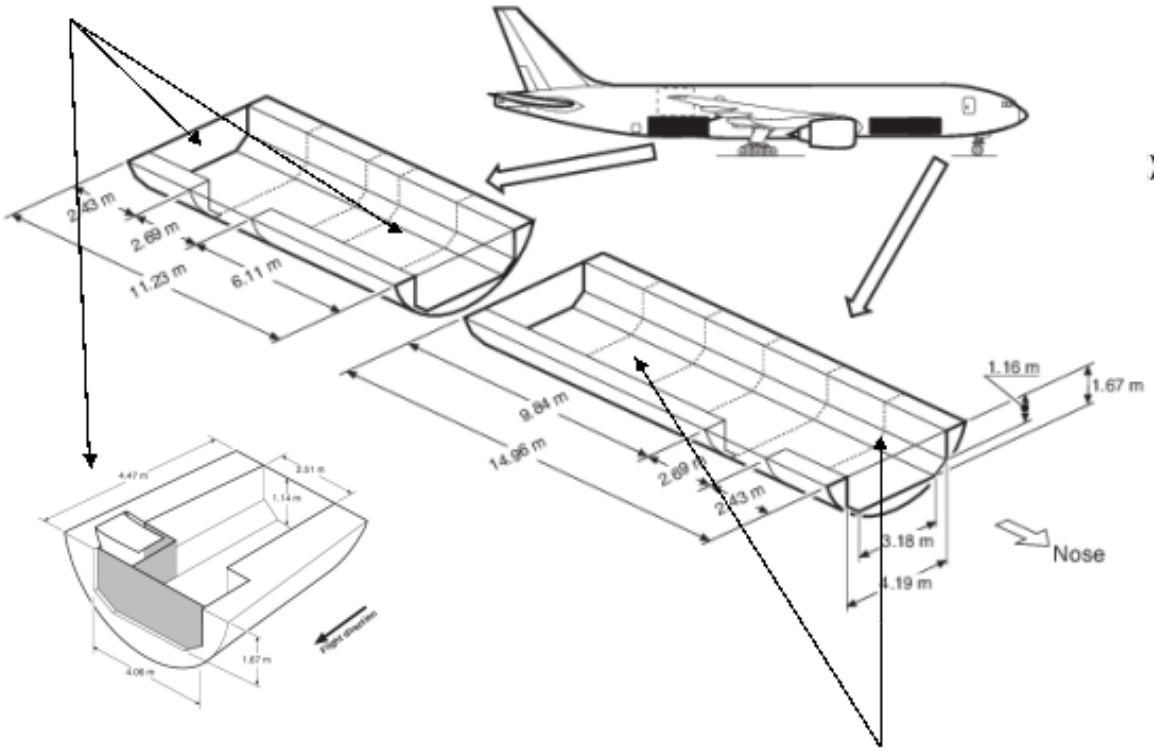

Forward Hold (Compartments 1 & 2)

UNCONTROLLED DOCUMENT

UNCONTROLLED DOCUMENT

UNCONTROLLED DOCUMENT (28 NOVEMBER 2024 21:39:26)

12. Maximum Position Weights

12.1 Maximum Main-deck ULD Weights in Kilograms

	ULD Position														
ULD Size	A	B	C	D	E	F	G	H	J	K	L	M (2)	P (2)	R (2)	
88” Twin-track	4082 (1)					6803 (1)			4082 (1)					3233	
96” Twin-track						6803 (1)									
16ft right	6401						11339		6401			6401 (3)			
16ft left															
20 ft right	7788						11339		7788			7788 (3)			
20 ft left															
16ft Centre					11339		11339		11339						
20ft Centre					11339		11339		11339						
96” Centre (1)	6803														
	A	AB	BC	CD	DE	EF	FG	G	GH	HJ	JK	L	LM	MP (2)	P (2)
16ft lateral	6268					11339			6268						
Max. running Load (kg/m)	2566					4677			2566						

(1) Consult with load control on the maximum weight of the opposite lane.

(2) Consult with Load Control on the combined load limitation of M/P/R and compartment 5.

(3) MR/PR use J1 contour only when loading 16/20ft ULDs.

Restraints must be set accordingly when using any 16ft (ULD size code R) configurations. Lock change must be requested from Maersk Air maintenance.

UNCONTROLLED DOCUMENT
UNCONTROLLED DOCUMENT

UNCONTROLLED DOCUMENT (28 NOVEMBER 2024 21:39:26)

12.2 Additional Restrictions for Main-deck loads

12.2.1 Lateral Imbalance

The maximum lateral imbalance depends on the actual take-off or landing weight and can be derived from the following table. In general, the higher the take-off or landing weight, the lower the maximum allowed lateral imbalance. It is always the more restrictive weight that applies.

Difference Weight between left and right side (kg)	Restrictions	
	MTOW (kg)	MLAW (kg)
Up to 11.000	No restriction	
12.000	341169	257042
13.000	340614	256728
14.000	340081	256413
15.000	339508	256099
16.000	338954	255784
17.000	338400	255470
18.000	337846	255155
19.000	337292	254841
20.000	336739	254527
21.000	336185	254212
22.000	335631	253898
23.000	335077	253583
24.000	334523	253269
25.000	333970	252955
26.000	333418	252640
27.000	332862	252326
28.000	332308	252011
29.000	331754	251697
30.000	331200	251382
31.000	330647	251068
32.000	330093	250754
33.000	329539	250439
34.000	328985	250125
35.000	328431	249810
36.000	327878	249496
37.000	327324	249181
38.000	325770	248867

12.2.2 Maximum Lateral Unsymmetrical Load

Maximum unsymmetrical load restrictions only apply if any ULD in twin-row configuration weighs more than 4500 kg. If so, then the ULD in the opposite side may have a restricted maximum weight.

These restrictions have been incorporated into the Sable system.

UNCONTROLLED DOCUMENT
UNCONTROLLED DOCUMENT

UNCONTROLLED DOCUMENT (28 NOVEMBER 2024 21:39:26)

UNCONTROLLED DOCUMENT

UNCONTROLLED DOCUMENT

12.3 Maximum Lower-deck Compartment Weights in Kilograms

12.3.1 Forward Hold

Compt	Position	Max. Gross Weight per ULD (in kilograms)				Max. running Load (kg/m)	Max. Capacity
		88"/125"	96"/125"	60.4"/61.5" (AKE)	60.4"/125" (ALP)		
1	11P	4676	4676			2090	30617
	12P						
	13P						
	11L/R - 14L/R			1587	3175		
2	21P	4676	4676				
	22P						
	23P	5102	5102			3106	
	21 L/R - 25 L/R			1587	3175	2090	

12.3.2 Aft Hold

Compt	Position	Max. Gross Weight per ULD (in kilograms)				Max. running Load (kg/m)	Max. Capacity
		88"/125"	96"/125"	60.4"/61.5" (AKE)	60.4"/125" (ALP)		
3	31P	5102	5102			3106	22226
	32P	4676	4676			2090	
	31L/R - 33L/R			1588	3175		
4	41P	4676	4676				
	42P						
	41L/R - 44L/R			1588	3175		

12.3.3 Bulk Hold

Compt.	Volume (m3)	Max. floor load (kg/m2)	Max. Weight (kg)
5	16.8	730	4082*

*If using the maximum capacity of the compartment, consider the weight of any crew baggage loaded.

UNCONTROLLED DOCUMENT (28 NOVEMBER 2024 21:39:26)

UNCONTROLLED DOCUMENT

12.4 Weight Restrictions due to Missing or Broken Restraints

Strictly observe the following restrictions:

- A missing or unserviceable restraint must never be replaced by a tie-down strap attached to the aircraft structure.
- The Missing or Unserviceable Restraints procedure detailed below does not allow for the application of said procedure in the following cases:
  - When restraints cannot be raised due to the minimum clearance of 8cm between cargo build-up and the pallet base (e.g., cargo on pallet rim or overlapping the pallet edge).
  - When a restraint was not raised during loading by the ground staff.
- All operable restraints must be raised.

If one or two restraints per position are missing or unserviceable:

- Unserviceable restraints must not be next to each other.
- Unserviceable restraints must not be adjacent to a common corner.

UNCONTROLLED DOCUMENT

UNCONTROLLED DOCUMENT

UNCONTROLLED DOCUMENT (28 NOVEMBER 2024 21:39:26)

13. Aircraft ULD Compatibility

13.1 Main Deck Configurations

The loading combinations shown here are examples only. More combinations are possible. Full information covering possible loading combinations, and how they interact, can be found in the Sable system.

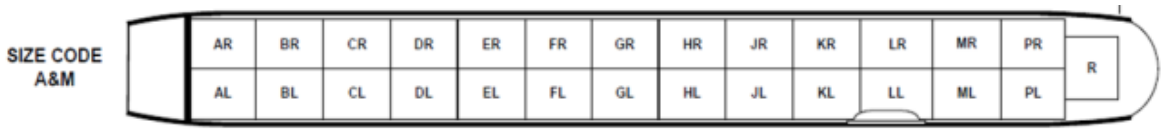

Configuration 1: 1 Lateral Centre-line and 26 Longitudinal Twin-track 125”/96” or 125”/88” positions



Configuration 2: 13 Centre-line Longitudinal 125”/96” ULDs



Configuration 3a: 11 Longitudinal Twin-track 16ft or 20ft ULDs



Configuration 4: 17 Lateral 16ft ULDs

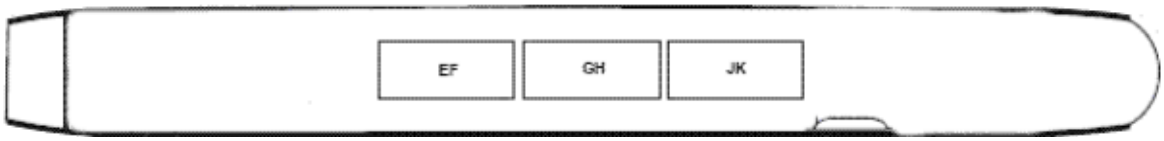

Configuration 5a: 3 Centreline longitudinal 20ft ULDs

UNCONTROLLED DOCUMENT
UNCONTROLLED DOCUMENT

UNCONTROLLED DOCUMENT (28 NOVEMBER 2024 21:39:26)

UNCONTROLLED DOCUMENT

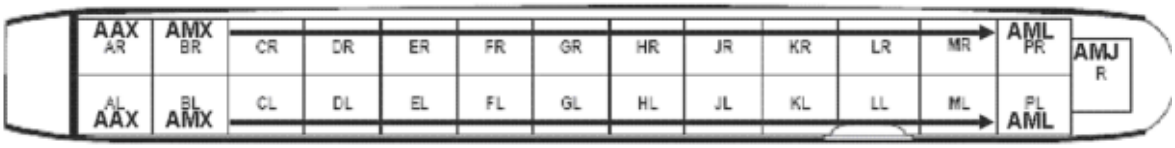

STANDARD DHL MAIN-DECK CONTAINER CONFIGURATION

UNCONTROLLED DOCUMENT

UNCONTROLLED DOCUMENT

UNCONTROLLED DOCUMENT (28 NOVEMBER 2024 21:39:26)

13.2 Main Deck ULD Compatibility

The following ULD type loading restrictions apply. The ULD type can be loaded on positions marked with a 'Y'. The ULD type cannot be loaded on positions marked with a 'N'.

		ULD Type																	
	Pos	AAA	AAC/ LAY	AAJ/ LAK	AAX	AMA	AMD	AMH	AMJ	AML	AMP	AMV	AMX	HMJ	PAG	PMC	PGA	PGE	PRA	PZA
1	AL/R	Y	Y	Y	Y	N	N	N	N	N	N	N	N	N	Y	Y1	N	N	N	N
	BL/R	Y	Y	Y	Y	N	N	Y	Y	Y	Y	Y	Y	Y	Y	Y	N	N	N	N
	CL/R	Y	Y	Y	Y	N	N	Y	Y	Y	Y	Y	Y	Y	Y	Y	N	N	N	N
	DL/R	Y	Y	Y	Y	N	N	Y	Y	Y	Y	Y	Y	Y	Y	Y	N	N	N	N
	EL/R	Y	Y	Y	Y	N	N	Y	Y	Y	Y	Y	Y	Y	Y	Y	N	N	N	N
	FL/R	Y	Y	Y	Y	N	N	Y	Y	Y	Y	Y	Y	Y	Y	Y	N	N	N	N
	GL/R	Y	Y	Y	Y	N	N	Y	Y	Y	Y	Y	Y	Y	Y	Y	N	N	N	N
	HL/R	Y	Y	Y	Y	N	N	Y	Y	Y	Y	Y	Y	Y	Y	Y	N	N	N	N
	JL/R	Y	Y	Y	Y	N	N	Y	Y	Y	Y	Y	Y	Y	Y	Y	N	N	N	N
	KL/R	Y	Y	Y	Y	N	N	Y	Y	Y	Y	Y	Y	Y	Y	Y	N	N	N	N
	LL/R	Y	Y	Y	Y	N	N	Y	Y	Y	Y	Y	Y	Y	Y	Y	N	N	N	N
	ML/R	Y	Y	Y	Y	N	N	Y	Y	Y	Y	Y	Y	Y	Y	Y	N	N	N	N
	PL/R	Y	Y	Y	Y	N	N	Y	N	Y	Y	Y	N	Y	Y	Y	N	N	N	N
	R	Y	Y	Y	Y	Y	N	Y	Y2	N	Y	Y	N	N	Y3	Y3	N	N	N	N
2	A	N	N	N	N	Y	N	N	N	N	Y	N	N	N	N	Y	N	N	N	N
	B	N	N	N	N	Y	Y	Y	Y	Y	Y	N	Y	Y	N	Y	N	N	N	N
	C	N	N	N	N	Y	Y	Y	Y	Y	Y	N	Y	Y	N	Y	N	N	N	N
	D	N	N	N	N	Y	Y	Y	Y	Y	Y	N	Y	Y	N	Y	N	N	N	N
	E	N	N	N	N	Y	Y	Y	Y	Y	Y	N	Y	Y	N	Y	N	N	N	N
	F	N	N	N	N	Y	Y	Y	Y	Y	Y	N	Y	Y	N	Y	N	N	N	N
	G	N	N	N	N	Y	Y	Y	Y	Y	Y	N	Y	Y	N	Y	N	N	N	N
	H	N	N	N	N	Y	Y	Y	Y	Y	Y	N	Y	Y	N	Y	N	N	N	N
	J	N	N	N	N	Y	Y	Y	Y	Y	Y	N	Y	Y	N	Y	N	N	N	N
	K	N	N	N	N	Y	Y	Y	Y	Y	Y	N	Y	Y	N	Y	N	N	N	N
	L	N	N	N	N	Y	Y	Y	Y	Y	Y	N	Y	Y	N	Y	N	N	N	N
	M	N	N	N	N	Y	Y	Y	Y	Y	Y	N	Y	Y	N	Y	N	N	N	N
	P	N	N	N	N	Y	N	N	N	N	Y	N	N	N	N	Y	N	N	N	N
3a	ABR/L	N	N	N	N	N	N	N	N	N	N	N	N	N	N	N	Y	Y	Y	Y
	CDR/L	N	N	N	N	N	N	N	N	N	N	N	N	N	N	N	Y	Y	Y	Y
	EFR/L	N	N	N	N	N	N	N	N	N	N	N	N	N	N	N	Y	Y	Y	Y
	GHR/L	N	N	N	N	N	N	N	N	N	N	N	N	N	N	N	Y	Y	Y	Y
	JKR	N	N	N	N	N	N	N	N	N	N	N	N	N	N	N	Y	Y	Y	Y
	MPR/L	N	N	N	N	N	N	N	N	N	N	N	N	N	N	N	Y	Y	Y	Y

Y1: PMC with aisle only.

Y2: AMJ loadable with net facing forward.

Y3: Pallets built to A contour not allowed.

Note: If a 20ft ULD is loaded on Position HJR (Config. 3b) it covers the pallet locks of adjacent position(s), either forward or aft, depending on the exact placement of the 20ft ULD. It is then not possible to load 125”/88” or 125”/96” ULDs on adjacent position(s) – either forward *or* aft**.**

The following ULD type loading restrictions apply. The ULD type can be loaded on positions marked with a ‘Y’. The ULD type cannot be loaded on positions marked with a ‘N’.

		ULD Type																	
	Pos	AAA	AAC/ LAY	AAJ/ LAK	AAX	AMA	AMD	AMH	AMJ	AML	AMP	AMV	AMX	HMJ	PAG	PMC	PGA	PGE	PRA	PZA
4	A	N	N	N	N	N	N	N	N	N	N	N	N	N	N	N	N	N	Y	Y
	AB	N	N	N	N	N	N	N	N	N	N	N	N	N	N	N	N	N	Y	Y
	BC	N	N	N	N	N	N	N	N	N	N	N	N	N	N	N	N	N	Y	Y
	CD	N	N	N	N	N	N	N	N	N	N	N	N	N	N	N	N	N	Y	Y
	D	N	N	N	N	N	N	N	N	N	N	N	N	N	N	N	N	N	Y	Y
	DE	N	N	N	N	N	N	N	N	N	N	N	N	N	N	N	N	N	Y	Y
	EF	N	N	N	N	N	N	N	N	N	N	N	N	N	N	N	N	N	Y	Y
	FG	N	N	N	N	N	N	N	N	N	N	N	N	N	N	N	N	N	Y	Y
	G	N	N	N	N	N	N	N	N	N	N	N	N	N	N	N	N	N	Y	Y
	GH	N	N	N	N	N	N	N	N	N	N	N	N	N	N	N	N	N	Y	Y
	HJ	N	N	N	N	N	N	N	N	N	N	N	N	N	N	N	N	N	Y	Y
	JK	N	N	N	N	N	N	N	N	N	N	N	N	N	N	N	N	N	Y	Y
	K	N	N	N	N	N	N	N	N	N	N	N	N	N	N	N	N	N	Y	Y
	L	N	N	N	N	N	N	N	N	N	N	N	N	N	N	N	N	N	Y	Y
	LM	N	N	N	N	N	N	N	N	N	N	N	N	N	N	N	N	N	Y	Y
	MP	N	N	N	N	N	N	N	N	N	N	N	N	N	N	N	N	N	Y	Y
	P	N	N	N	N	N	N	N	N	N	N	N	N	N	N	N	N	N	Y	Y
5a	EF	N	N	N	N	N	N	N	N	N	N	N	N	N	N	N	Y	Y	Y	Y
	GH	N	N	N	N	N	N	N	N	N	N	N	N	N	N	N	Y	Y	Y	Y
	JK	N	N	N	N	N	N	N	N	N	N	N	N	N	N	N	Y	Y	Y	Y

Notes: If a 20ft ULD is loaded on Position DE (Config. 5b) it covers the pallet locks of adjacent twin-track positions, either forward or aft, depending on the exact placement of the 20ft ULD. It is then not possible to load 125”/88” or 125”/96” ULDs on the adjacent twin-track position – either forward *or* aft.

UNCONTROLLED DOCUMENT (28 NOVEMBER 2024 21:39:26)

13.3 Lower Deck Configurations

The loading combinations shown here are examples only. More combinations are possible. Full information covering possible loading combinations, and how they interact, can be found in the Sable system.

13.3.1 Forward Hold

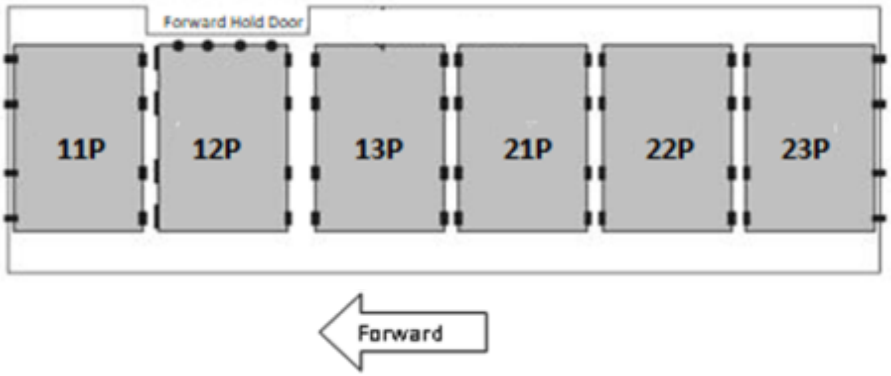

Configuration 1: 6 lateral 125”/96” or 125”/88” ULDs

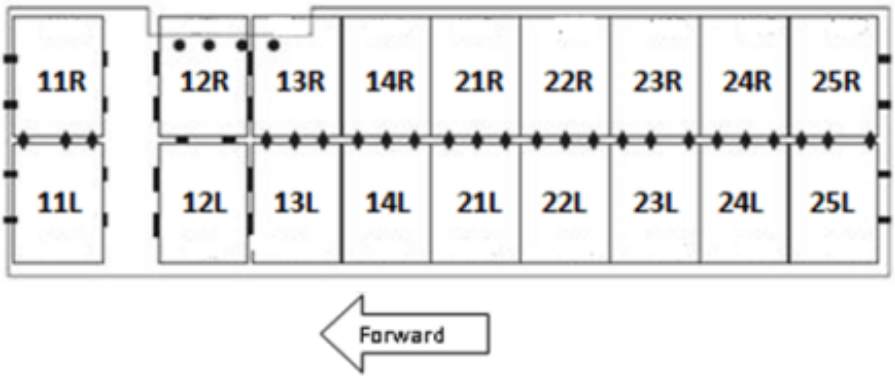

Configuration 2:9 Lateral 125”/60.4” or 18 of 61.5”/60.4” ULDs

UNCONTROLLED DOCUMENT
UNCONTROLLED DOCUMENT

UNCONTROLLED DOCUMENT (28 NOVEMBER 2024 21:39:26)

Examples of Forward Hold loading combinations:

16 x 60.4 and 1 x 88/96:

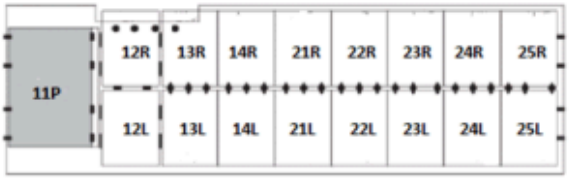

6 x 60.4 and 4 x 88/96:

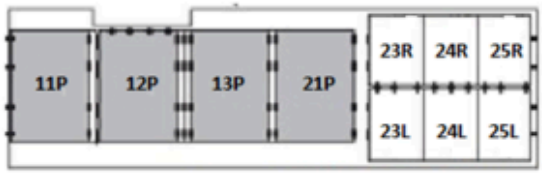

12 x 60.4 and 2 x 88/96:

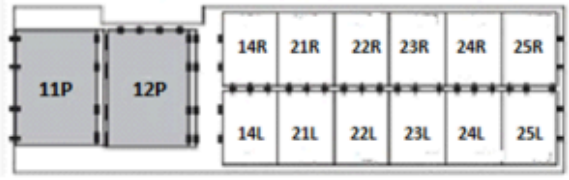

4 x 60.4 and 4 x 88/96:

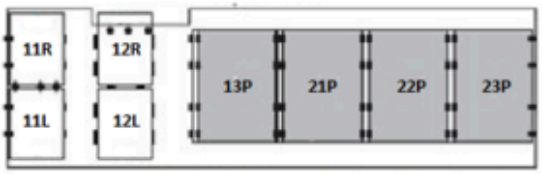

2 x 60.4 and 5 x 88/96:

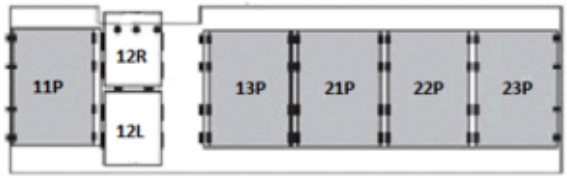

13.3.2 Aft Hold

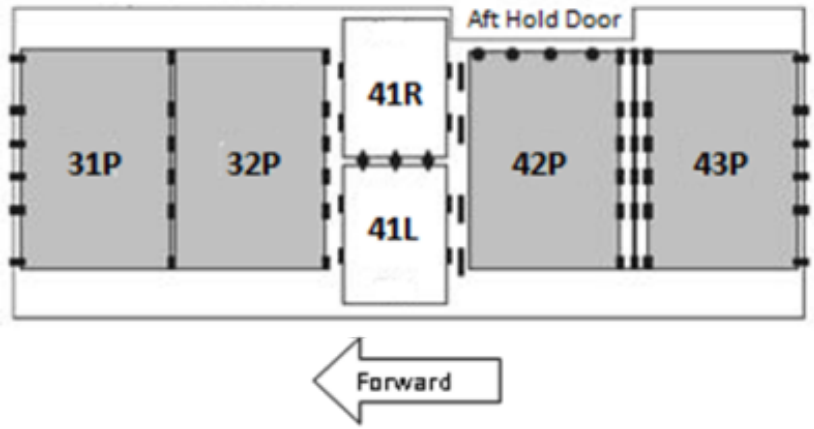

Configuration 1: 4 Lateral 125”/96” or 125”/88” ULDs and 1 125”/60.4” (ALP) ULD or 2 61.5”/60.4” (AKE) ULDs

UNCONTROLLED DOCUMENT
UNCONTROLLED DOCUMENT

UNCONTROLLED DOCUMENT (28 NOVEMBER 2024 21:39:26)

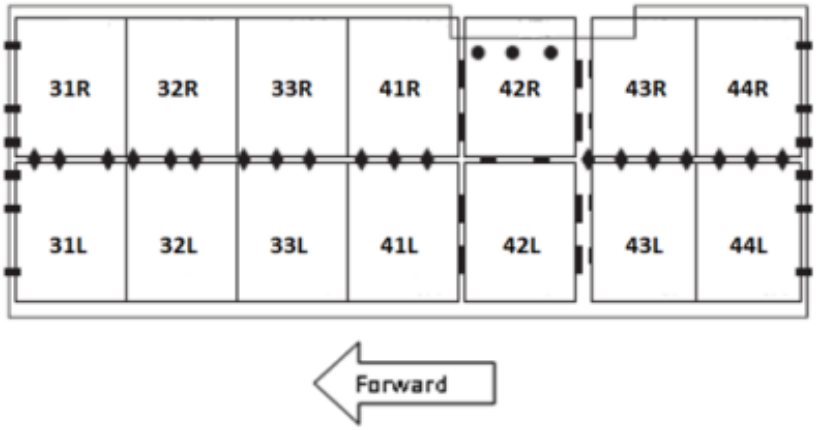

Configuration 2: 7 Lateral 125”/60.4” **or** 14 61.5”/60.4” ULDs

Examples of Aft Hold loading combinations:

2 x 60.4 and 2 x 88/96 and 2 x 88” * 125”

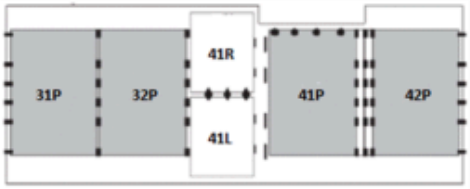

10 x 60.4 and 1 x 88/96:

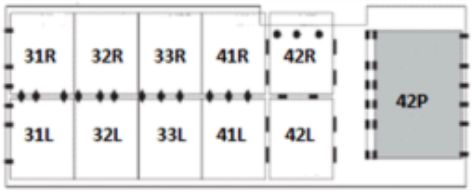

8x 60.4 and 2 x 88” * 125”

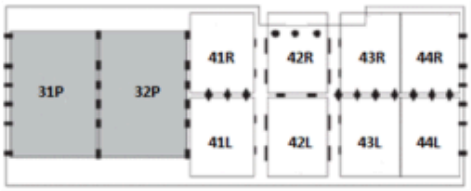

4 x 60.4 and 1 x 88/96 and 2 x 88” * 125”

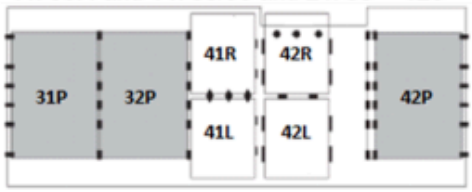

8 x 60.4 and 2 x 88/96

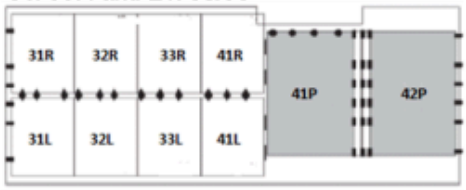

2 x 60.4 and 3 x 88/96
(Combination of 96” on 31P and 88” on 32P is **not** possible)

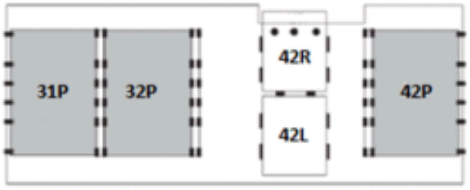

UNCONTROLLED DOCUMENT
UNCONTROLLED DOCUMENT

UNCONTROLLED DOCUMENT (28 NOVEMBER 2024 21:39:26)

UNCONTROLLED DOCUMENT

13.4 Lower Deck ULD Compatibility

The following ULD type loading restrictions apply. The ULD type can be loaded on positions marked with a 'Y'. The ULD type cannot be loaded on positions marked with a 'N'.

		ULD Type											
	Pos	AAF	AAJ/ LAK	RAP	AMF	AMP	PAG	PMC	AKE	RKN	ALF	ALP	AVA
FWD 1	11P	Y	Y	Y	Y	Y	Y	Y	N	N	N	N	N
	12P	Y	Y	Y	Y	Y	Y	Y	N	N	N	N	N
	13P	Y	Y	Y	Y	Y	Y	Y	N	N	N	N	N
	21P	Y	Y	Y	Y	Y	Y	Y	N	N	N	N	N
	22P	Y	Y	Y	Y	Y	Y	Y	N	N	N	N	N
	23P	Y	Y	Y	Y	Y	Y	Y	N	N	N	N	N
FWD 2	11R/L	N	N	N	N	N	N	N	Y	Y	Y	Y	Y
	12R/L	N	N	N	N	N	N	N	Y	Y	Y	Y	Y
	13R/L	N	N	N	N	N	N	N	Y	Y	Y	Y	Y
	14R/L	N	N	N	N	N	N	N	Y	Y	Y	Y	Y
	21R/L	N	N	N	N	N	N	N	Y	Y	Y	Y	Y
	22R/L	N	N	N	N	N	N	N	Y	Y	Y	Y	Y
	23R/L	N	N	N	N	N	N	N	Y	Y	Y	Y	Y
	24R/L	N	N	N	N	N	N	N	Y	Y	Y	Y	Y
	25R/L	N	N	N	N	N	N	N	Y	Y	Y	Y	Y
AFT 1	31P	Y	Y	Y	Y	Y	Y	Y	N	N	N	N	N
	32P	Y	Y	Y	Y	Y	Y	Y	N	N	N	N	N
	42P	Y	Y	Y	Y	Y	Y	Y	N	N	N	N	N
	43P	Y	Y	Y	Y	Y	Y	Y	N	N	N	N	N
AFT 2	31R/L	N	N	N	N	N	N	N	Y	Y	Y	Y	Y
	32R/L	N	N	N	N	N	N	N	Y	Y	Y	Y	Y
	33R/L	N	N	N	N	N	N	N	Y	Y	Y	Y	Y
	41R/L	N	N	N	N	N	N	N	Y	Y	Y	Y	Y
	42R/L	N	N	N	N	N	N	N	Y	Y	Y	Y	Y
	43R/L	N	N	N	N	N	N	N	Y	Y	Y	Y	Y
	44R/L	N	N	N	N	N	N	N	Y	Y	Y	Y	Y

Forward hold Notes: 11P and 12P can be locked individually – the limitation that needs to be observed will only apply for LD3 combinations starting from 13L/R to 25L/R.

LD3 (AKE) and LD11 (ALP) type ULDs are generally stack- loaded and secured by partial load latches around positions 11 and 12.

Single loading of LD3 (AKE) type ULDs is allowed.

Aft Hold Notes: If loading **2 x LD3 (AKE) or 1 x LD11 (ALP) and 3 x 88"/96"-125" ULDs**, combination of 96" in Position 31P and 88" in 32P is not possible.

All **allowed** ULDs can be loaded in all positions. PLA / PLW / PKC are not permitted

UNCONTROLLED DOCUMENT (28 NOVEMBER 2024 21:39:26)

UNCONTROLLED DOCUMENT

LD3 (AKE) and LD11 (ALP) type ULDs are generally stack- loaded and secured by partial load latches around positions 41 and 42.

Single loading of LD3 (AKE) type ULDs is allowed.

UNCONTROLLED DOCUMENT

UNCONTROLLED DOCUMENT

UNCONTROLLED DOCUMENT (28 NOVEMBER 2024 21:39:26)

14. Loading and Un-Loading

14.1 Cargo Loading System

Only fully trained and certified staff are allowed to operate the Cargo Loading System (CLS). The CLS is controlled by the:

- Master Control Panel (MCP)
- Outside Control Panel (OCP)
- Local Control Panel (LCP)
- PDU Retract Panel (PRP)
- Control Panel for 20ft ULDs

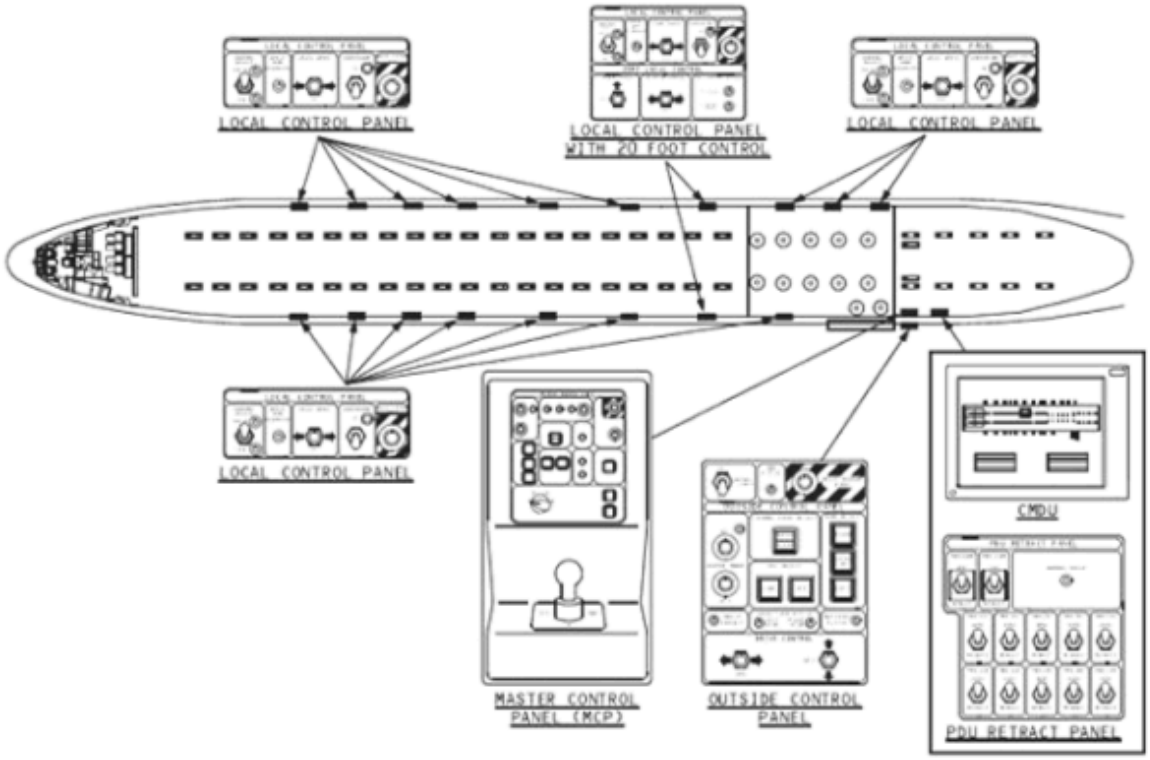

A minimum of 2 persons are required to operate the Main-deck CLS. It is recommended that 3 staff members are made available for the Main-deck, to maximise the efficiency of the un-loading and loading process.

UNCONTROLLED DOCUMENT
UNCONTROLLED DOCUMENT

UNCONTROLLED DOCUMENT (28 NOVEMBER 2024 21:39:26)

UNCONTROLLED DOCUMENT

14.2 Un-Loading Sequence

Step 1: Un-load the aft lower deck.

Step 2: Un-load the ULDs on the main deck in the following numbered sequence, and respect standard step un-loading method:

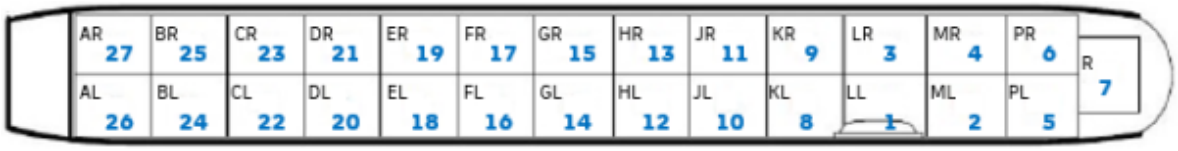

Step 3: Un-load the forward lower deck.

Note: Unloading both sides of the Main-deck simultaneously is the preferred option, but unloading each side separately is also allowed.

14.3 Loading Sequence

Step 1: Load the forward lower deck.

Step 2: Load the ULDs on the main deck in the following numbered sequence, and respect standard step un-loading method:

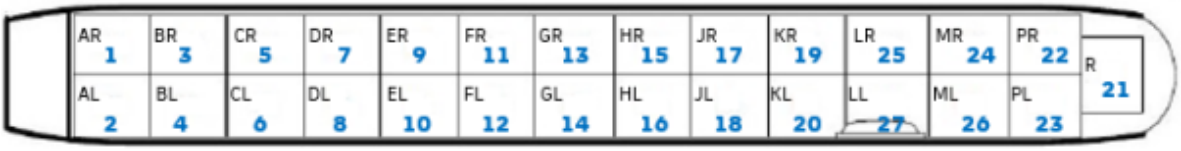

Step 3: Load the aft lower deck.

Note: Loading both sides of the Main-deck simultaneously is the preferred option, but loading each side separately is also allowed.

If loading both sides simultaneously, particular attention must be given to **ensure all centre-line and side restraints are properly engaged.**
Additional Precautions Make sure that two persons verify that all locking devices, securing the ULDs, are engaged and operative.

Both persons must sign the Load Plan.

UNCONTROLLED DOCUMENT (28 NOVEMBER 2024 21:39:26)

UNCONTROLLED DOCUMENT

14.4 Loading Notes

14.4.1 Tail-Tipping

The B777 Freighter is a very stable aircraft, and it is possible to load and/or un-load more than one deck at the same time.

As a general rule, once either the FWD hold and/or Main-deck positions AL/AR thru CL/CR have been loaded with a **combined minimum of 10 tons**, loading may proceed with minimum risk of tail-tipping regardless of method used. Due care must be exercised if doing so, ensuring at all times that the actual loading and/or un-loading procedure employed does not result in a tail-tip condition.

14.4.2 CLS Operation

By loading and un-loading both sides of the Main-deck simultaneously, the Cargo Loading System will be utilised most efficiently, reducing turn-around times to the minimum possible. Side-by-side loading and un-loading is possible, but is considerably less efficient, and therefore more time consuming and requiring additional loading resources.

Whilst loading or un-loading the Main-Deck, the High Loader (K-Loader) must be indexed towards the aft of the Main-Deck Cargo Door. Care must be exercised positioning the loader, as incorrect positioning may have a detrimental effect on loading and un-loading efficiency, particularly when the load includes 16 and/or 20 feet ULDs.

A minimum of 2 persons are required to operate the CLS when loading 16 and 20 feet ULDs. It is not possible to rotate a 16 or 20 foot ULD in or out of the aircraft single handed.

All PDUs (Power Drive Units) are software controlled. The failure of any single PDU will not have a negative effect on the CLS' ability to load or unload freight. Should a single PDU fail, the power of adjacent PDUs is sufficient to overcome the breaking action of the failed unit.

The FCT (Freighter Common Turntable) PDUs mounted around the door area are also software controlled, and in the event of a failure will drop below the cargo-deck waterline, allowing for continued and uninterrupted loading and un-loading.

In the unlikely event of total power failure, loading or un-loading is not possible until power has been restored to the CLS.

UNCONTROLLED DOCUMENT

UNCONTROLLED DOCUMENT

UNCONTROLLED DOCUMENT (28 NOVEMBER 2024 21:39:26)

UNCONTROLLED DOCUMENT

UNCONTROLLED DOCUMENT

UNCONTROLLED DOCUMENT

14.4.3 CLS Troubleshooting

When the moveable parts of the CLS stop working a reset becomes necessary to allow the system to operate within normal parameters again.

Aircraft handling personnel have the following options to fix the problem with or without the assistance from Maintenance:

Press the MCP/OCP Control Panel Select Button for seven seconds until the button stops flashing.

Step 1 - Stop loading and change the GPU/Underground Electrical Pit for a different GPU. Try loading again. If still not operable, try Step 2.

Step 2 – Ask Maintenance to switch on the APU and arrange for the discontinuation of GPU usage. Try loading again. If still not operable, try Step 3.

Step 3 - Perform alternative reset by closing, locking and latching the Main Cargo Door. Reopen and try loading again. If still not operable, try Step 4.

Caution: position high loader away from the aircraft before closing the door.

Step 4 – Ask Maintenance to reset the CLS's circuit breakers.

Please send a CLS report indicating which method was used to fix the CLS system.

Under no circumstances may aircraft handling personnel touch or reset any circuit breakers. This is a Maintenance function only.

14.4.4 Service Point Access

All access to outside service points (GPU, ASU, ACU etc) must be done using a ladder due to the height of the fuselage off the ground. Lower-deck doors of containerised compartments must be opened using technical / maintenance steps to reach the cargo doors. In cases where technical / maintenance steps are not available, it is permitted to use belt-loaders with raised safety rails as long as they do not cause an obstacle. The use of a ULD loader / hi-loader to open / close lower deck doors is prohibited.

14.4.5 Alternative Access to Main-Deck Loader

If the normal access path is blocked, the MDL may be approached driving under the aircraft tail with empty dollies only. Particular care shall be given to prevent impact between tractor / dolly train and the aircraft fuselage. To ensure a safe distance is maintained, a guide-man shall be used at all times.



Note: Parallel dolly-train un-loading is not allowed for this procedure

UNCONTROLLED DOCUMENT (28 NOVEMBER 2024 21:39:26)

14.4.6 Lateral guides on LL/LR Position

To avoid causing damage to the door frame, it is imperative the lateral guides aft of position LL/LR are always used during loading and un-loading of the aircraft. The only exception to this rule is when loading / un-loading16ft and 20ft pallets, in which case the lateral guides shall be lowered to allow free rotation of the pallets.

14.4.7 Intermediate Bulk Containers (IBCs)

Following general rules apply to IBCs when carrying liquids:

- **Special load code/remark/flagging 'IBC' shall be used. This is needed for load control purposes.**
- IBCs must be built of metal or hard plastic enclosed in a metal frame.
- IBCs are only allowed as a pallet load.
- Top loading is NOT permitted.
- The floor of the pallet must be covered with supporting platforms.
- Distribute IBCs evenly on the pallet.
- Volume max. 1000 liter per IBC.
- Use absorption sheets and plastic foil according to procedures.
- The fill lever per IBC must be a minimum of 80% and a maximum of 95%

Note that Dangerous Goods as liquids are **not** allowed on IBCs.

ULDs with IBCs are only allowed on the following positions:

  - Main Deck: E/ F/ G/ H/ J.
  - Lower Deck: 22P/ 23P/ 31P/ 32P.

- If IBCs are loaded the Max. Position Weight must be reduced by 20%.
- Max. 5 IBCs allowed per pallet.
- Max. Allowed Total Gross Weight of all pallets loaded with IBCs on the aircraft is 40 tons.
- All position locks must be serviceable.
- For ULDs with mixed load, the IBC restriction applies

UNCONTROLLED DOCUMENT
UNCONTROLLED DOCUMENT

UNCONTROLLED DOCUMENT (28 NOVEMBER 2024 21:39:26)

15. Rigid, Oversized and Special Loads

For guidance on the handling of special loads, please refer to the Special Loads Regional Contact Instructions outlined in Chapter 6 **6.12.22.3 - Determining Loadability of Special Loads**. Where direct operator approval is required, the Regional Airside Team will liaise with Global Airside as needed.

15.1 Floating / Heavy Pallets

ULDs which are heavier than the standard allowed maximum gross weight may not be loaded. Special permission from Maersk Air is possible for 16/20ft centre positions up to 21070 kg. Any shipments on 16ft or 20ft centre positions which are heavier than the standard allowed maximum gross weight will need to be strapped to the aircraft structure. Additional ground time will be required at the flight's origin and destination to accomplish this.

Permission must be sought from your Special Loads Regional contact before accepting any ULDs which require loading on a floating position, or for any pieces with a weight of more than 9.999kg.

Permission, including a special loading instruction, will be granted only after all details concerning the load and the loading have been checked and clarified.

The following details are required for all pieces weighing more than 9.999kg:

- Exact dimensions
- Detailed description
  - For un-packed shipments i.e. generators, trucks with body, drilling equipment, boats, turbine shafts, tubes
  - For packed shipments i.e. closed wooden boxes, wooden crates, Sea-container, pieces covered with closed plastic tarpaulin or aluminium foil
- Information if stackable and/or turn-able
- Description about actual or planned surface/sub-construction
  - E.g. Wooden beams length/lateral, wooden platform, steel beams length/lateral, steel frame
- Information about available lashing points; best to send a sketch or blueprint with marked lashing points
- Information about centre of gravity
- Steel sheets, steel plates and similar solid constructions
  - These goods require a solid packaging (e.g. solid crate)
- A blueprint/sketch/photo is always mandatory to perform a load-ability check
- All pieces except those of solid construction must be delivered un-crated

15.2 Heavy Pieces (HEA)

Loading of HEA (pieces exceeding a weight of 150kg) is not allowed in compartment 5.

UNCONTROLLED DOCUMENT
UNCONTROLLED DOCUMENT

UNCONTROLLED DOCUMENT (28 NOVEMBER 2024 21:39:26)

UNCONTROLLED DOCUMENT

15.3 Crushable Cargo Requirements

To protect the cargo barrier from potential damage, a number of Crushable Cargo ULDs suitable for protecting the barrier wall against unrestrained Rigid Cargo must be loaded in between the cargo barrier and the first Rigid / Piercing ULD. The number of Crushable Cargo ULDs suitable for protecting the barrier wall against unrestrained Rigid Cargo required depends on the total Main-deck load, as per the following charts.

When the total MD weight is 82000 kg or less, the Crushable Cargo ULDs must meet the standard requirements of Crushable Cargo ULDs suitable for protecting the barrier wall against unrestrained Rigid Cargo.

When the total MD weight is **more than 82000 kg**, the Crushable Cargo ULDs must meet the standard requirements of Crushable Cargo ULDs suitable for protecting the barrier wall against unrestrained Rigid Cargo **AND must be at least 90% volumetrically full**.

Two Loading Lanes

Total MD weight	Number of Crushable Cargo ULDs suitable for protecting the barrier wall against unrestrained Rigid Cargo between the rigid cargo barrier and the first rigid/piercing ULD
Up to 82.000 kg	2 in each lane
More than 82.000 kg	3 in each lane

Centreline Positions

Total MD weight	Number of Crushable Cargo ULDs suitable for protecting the barrier wall against unrestrained Rigid Cargo between the rigid cargo barrier and the first rigid/piercing ULD
Up to 82.000 kg	3 in each lane
More than 82.000 kg	4 in each lane

Rigid and piercing cargo shall be flagged as follows:

RGD, e.g. LEJHUBCOYWPX**(RGD)**ORGCVG.

15.4 Piercing Cargo

Piercing cargo may not be loaded on the first and last loaded position on the aircraft.

UNCONTROLLED DOCUMENT (28 NOVEMBER 2024 21:39:26)

UNCONTROLLED DOCUMENT

15.5 Aircraft Engines

The following aircraft engines are loadable on the B777 Freighter.

Note: All engines shall be loaded in flight direction.

Engine Type	Loaded on	Allowed Loading Positions	Loading direction	Weight distribution for load control	
				Forward position	Aft position
BR710 BR715	96” Pallet	Main deck	Not important	100% on one position	
CF6-50	20ft Pallet	EF, GH, JK (Centre)	Fan against flight direction	40%	60%
			Fan in flight direction	60%	40%
CF6-80C2	16ft Pallet	CDR – JKR CDL – GHL	Fan against flight direction	45%	55%
			Fan in flight direction	55%	45%
CFM56-2	96” Pallet	Main deck	Not important	100% on one position	
CFM56-3 CFM56-5 CFM56-7 V2500	16ft or 20ft Pallet	CDR – JKR CDL – GHL	Fan against flight direction	40%	60%
			Fan in flight direction	60%	40%
	As exception 96” pallet	Main deck Check height and observe overlap	Fan against flight direction	100% on one position	
GE90	20ft Pallet	CDR – JKR CDL – GHL EF, GH, JK (Centre)	Fan against flight direction	40%	60%
GE90-110/115B	20ft Pallet	EF, GH, JK (Centre)	Not important. Fan must be disassembled	50%	50%
JT3 JT8 complete	96” Pallet	Main deck	Not important	100% on one position	
JT3 JT8 Partially assembled (without thrust reverser)	96” Pallet	Main deck	Not important	100% on one position	
		Compartment 1, 2, 3, 4.	Load through the hold door with the exhaust (aft end) of the engine first	100% on one position	
JT9 PW4000	20ft Pallet	CDR – JKR CDL – GHL EF, GH, JK (Centre)	Not important	50%	50%
RB211	20ft Pallet	EF, GH, JK (Centre)	Fan against flight direction	40%	60%
Trent 700	20ft Pallet	EF, GH, JK (Centre)	Fan against flight direction	40%	60%
PW2000	16ft or 20ft Pallet	EF, GH, JK (Centre)	-	-	-

UNCONTROLLED DOCUMENT (28 NOVEMBER 2024 21:39:26)

UNCONTROLLED DOCUMENT

15.6 Live Animals

15.6.1 Horses

Max. Number of Horses per Aircraft	24 as standard. Up to 36 with prior approval, for approval contact your Special Loads Regional Contact
Max. Number of Horses per Box	3
Max. number of Horses per Groom	9
Approved Horse Transport ULDs	DHL or IATA approved ULDs, i.e. HMJ or equivalent
Approved Loading Configurations	125”/96” Twin-track (Config 1) or 125”/96” centre-line (Config 2)

Notes: Horses shall be loaded with their heads facing the direction of travel (forwards).

UNCONTROLLED DOCUMENT

UNCONTROLLED DOCUMENT

UNCONTROLLED DOCUMENT (28 NOVEMBER 2024 21:39:26)

UNCONTROLLED DOCUMENT

15.6.2 Other Live Animals

The following table provides a list of commonly transported animals. If there is a requirement to transport animals not listed below, contact your Special Loads Regional Contact.

	Main-Deck**	Compt. 1**	Compt. 2**	Compt. 3**	Compt. 4**	Compt. 5
Pigs	No					**No** AVI allowed in CPT 5
Horses*	Max 36 horses	No				
Day-old chickens	Max 6 pallets	No				
Cattle*	Max 5 pallets	Yes	Yes	Yes	Yes	
Sheep or Goats*	Max 5 pallets					
Monkeys	Yes					
Dogs or Cats						
Small mammals or Birds						
Tropical Fish						
Reptiles or Amphibians						
Eels						
Crustaceans or Molluscs						
Bees						
Hatching eggs						

* Observe the additional regulations shown below.

** Loading of animals is not allowed in the door position LL, 21P and 41P.

Horses, Pigs, cattle, sheep and goats

- During the loading process the hold must be constantly ventilated
- Do not load full contour units directly in front of or directly behind the stalls.
- Do not load smell-sensitive cargo into the same hold.

The following information is required as a minimum:

- Animal species and amount
- Flight number, routing, date of flight
- Number of grooms and number of grooms that have access to the main-deck simultaneously

UNCONTROLLED DOCUMENT (28 NOVEMBER 2024 21:39:26)

UNCONTROLLED DOCUMENT

16. Restricted Commodities Loading

16.1 Radioactive (RRY), Magnetised (MAG) and Cargo Aircraft Only (CAO)

The following Dangerous Good type loading restrictions apply. The Dangerous Good type can be loaded on positions marked with a 'Y'. The Dangerous Good type cannot be loaded on positions marked with a 'N'.

	Position															
DG Type	AL /R	BL /R	CL /R	DL /R	EL /R	FL /R	GL /R	HL /R	JL /R	KL /R	LL /R	ML /R	PL /R	R	FWD LD	AFT LD
MAG	N	N	N	N	N	Y1	Y1	Y	Y	Y	Y	Y	Y	Y	N	Y
CAO	Y	Y	Y	Y	Y	Y	Y	Y	Y	Y	Y	Y	Y	N	Y	Y
RRY (max. 100 TI combined)	N	N	N	Y	Y	Y	Y	Y	Y	Y	Y	Y	Y	Y	N	Y
RRY (max. 150 TI combined)	N	N	N	N	N	Y	Y	Y	Y	Y	Y	Y	Y	Y	N	Y
RRY (max. 200 TI combined)	N	N	N	N	N	N	N	Y	Y	Y	Y	Y	Y	Y	N	Y

Y1: FL/FR and behind for twin-track. H and behind for single-track.

Note: Cargo Aircraft Only (CAO) can be loaded on any Main Deck position AL/R to PL/R provided they are loaded accessible. Accessible means that:

- The CAO is loaded on a pallet
- Positions AL/AR are loaded with 88" ULDs or 96" pallets with 25cm (10") aisle

The following load incompatibilities between AVI, HEG, LHO and the lower holds and RRY on the main deck apply:

If this special load …	**… Is loaded into lower-deck compartment …**	**… then max TI and allowed main-deck positions are …**		
		Max. 50.0 TI together on positions	Max. 100.0 TI together on positions	Max. 200.0 TI together on positions
AVI, HEG, LHO	**1**	F-R	F-R	H-R
	2	H-R	J-R	K-R
	3	D-G and R	D-F	**Not allowed**
	4	D-J	D-J	H
FIL	**1**	G-R	H-R	L-R
	2	J-R	L-R	R
	3	D-F	D	**Not allowed**
	4	D-H	D-G	**Not allowed**

UNCONTROLLED DOCUMENT (28 NOVEMBER 2024 21:39:26)

The following load incompatibilities between RRY in the lower holds and AVI, HEG, LHO, FIL in the main deck apply:

If this RRY …	… is loaded into lower-deck compartment …	… then the following main-deck positions are allowed for …	
		AVI, HEG, LHO	FIL
Max 50.0 TI	**3**	A-G	A-F
	4	A-J	A-H
Max 100.0 TI	**3**	A-F	A-D
	4	A-J	A-G
Max 150.0 TI	**3**	A-E	A
	4	A-H	A-E

16.2 Dry Ice

Refer to Global Supplementary Operational Document **Dry Ice Consolidation table** for the current Dry Ice limits.

Dry Ice (ICE) and Live Animals (AVI)

The following Dry Ice limits (in Kg) apply when loaded together with AVI in the same compartment:

Main Deck	Forward Hold	Aft Hold
1300	0	0

16.3 Additional Restrictions

Due to the lack of tie-down attachment points, **it is not allowed to load Restricted Commodities into Compartment 5.**

16.4 Lithium Batteries

Please see the Global Supplementary Operational Document **Lithium Battery Loadability Consolidation Table** for the current UN3480 Section IA/IB (RBI), UN3090 Section IA/IB (RBM), UN3481 Section I (RLI), UN3091 Section I (RLM) load ability limits.

UNCONTROLLED DOCUMENT
UNCONTROLLED DOCUMENT

UNCONTROLLED DOCUMENT (28 NOVEMBER 2024 21:39:26)

UNCONTROLLED DOCUMENT

17. Messaging and Reporting

17.1 Messaging

Standard messaging rules apply.

17.2 Reporting

Standard messaging rules apply.

UNCONTROLLED DOCUMENT

UNCONTROLLED DOCUMENT

UNCONTROLLED DOCUMENT (28 NOVEMBER 2024 21:39:26)

UNCONTROLLED DOCUMENT

18. Load Control Data

18.1 Standard Mass Additions

18.1.1 Additional Crew Members (ACM)

Maximum Number of ACMs:	8
Mass of ACM:	95 kg

18.1.2 Fly Away Kit (FAK) and Ballast

An FAK is carried as standard on this aircraft and is not included in the DOW. FAK is located in Bulk position 52 and shall be entered in SABLE.

Aircraft Registration	FAK Weight (Kg)
OY-MAC	471

Ballast is not carried as standard on this aircraft.

18.2 Minimum Fuel and Standard Taxi Fuel

Minimum Fuel:	Not Applicable
Standard Taxi Fuel:	500 kg (Subject to revision)

18.3 LMC Restrictions

Maximum Fuel LMC:	Not Allowed
Maximum Payload LMC:	+/- 1500 kg

UNCONTROLLED DOCUMENT

UNCONTROLLED DOCUMENT

UNCONTROLLED DOCUMENT (28 NOVEMBER 2024 21:39:26)

19. Maximum Package Dimensions

19.1 Main Cargo Door (in.)

MAIN DECK COMPARTMENT ALLOWABLE PACKAGE SIZES - SIDE CARGO DOOR														
HEIGHT IN.	WIDTH IN.													
	10	20	30	40	50	60	70	80	90	100	110	120	130	140
	LENGTH IN.													
120	319	286	260	239	220	205	191	173	149	100	100	100	100	100
118	335	300	271	249	229	212	199	182	161	131	106	106	106	106
116	353	314	284	259	238	221	206	191	171	145	111	111	111	111
114	388	330	296	270	248	229	214	199	181	157	125	117	117	117
112	393	346	310	281	257	238	221	207	189	168	140	123	123	123
110	415	364	325	293	268	247	229	214	198	177	152	129	129	129
108	439	383	340	306	279	256	237	221	206	186	162	135	135	135
106	456	408	352	316	288	265	246	229	213	195	172	143	140	140
104	484	376	369	330	300	275	254	236	221	203	181	153	146	146
102	513	440	386	345	312	285	263	242	228	211	189	163	152	152
100	561	474	412	364	327	297	271	252	235	218	198	172	158	158
98	580	490	424	375	337	306	281	260	242	225	205	180	163	163
0-85.5	839	666	553	474	415	370	333	304	281	259	241	219	192	192

Note: Maximum length for a Main-deck piece is 493 inches

UNCONTROLLED DOCUMENT
UNCONTROLLED DOCUMENT

UNCONTROLLED DOCUMENT (28 NOVEMBER 2024 21:39:26)

UNCONTROLLED DOCUMENT

UNCONTROLLED DOCUMENT

19.2 Main Cargo Door (cm.)

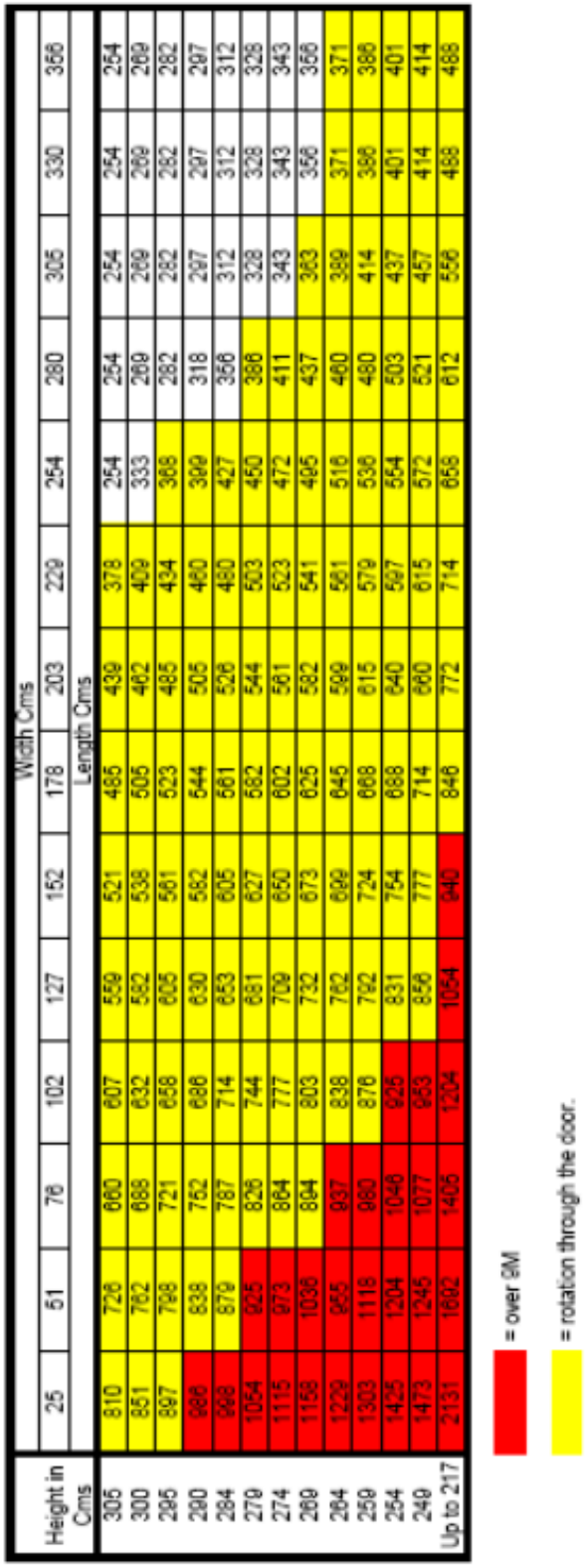

Height in Cms	Width Cms: 25	51	76	102	127	152	178	203	229	254	280	305	330	356
	Length Cms													
305	810	726	660	607	559	521	485	439	378	254	254	254	254	254
300	851	762	688	632	582	538	505	462	409	333	269	269	269	269
295	897	798	721	658	605	561	523	485	434	388	282	282	282	282
290	950	838	762	696	639	592	544	505	460	399	318	297	297	297
284	968	879	787	714	653	605	561	526	480	427	356	312	312	312
279	1054	925	826	744	681	627	582	544	503	450	386	328	328	328
274	1115	973	864	777	709	650	602	561	523	472	411	343	343	343
269	1153	1036	894	803	732	673	625	582	541	495	437	383	356	356
264	1229	955	937	838	762	699	645	599	561	516	460	399	371	371
259	1303	1118	980	876	792	724	668	615	579	536	480	414	386	386
254	1425	1204	1046	925	831	754	688	640	597	554	503	437	401	401
249	1473	1245	1077	953	856	777	714	660	615	572	521	457	414	414
Up to 217	2131	1602	1405	1204	1054	940	848	772	714	658	612	558	488	488

= over 6M

= rotation through the door.

Note: Maximum length for a main-deck piece is 1000cm

UNCONTROLLED DOCUMENT (28 NOVEMBER 2024 21:39:26)

UNCONTROLLED DOCUMENT

19.3 Forward LD Cargo Door

FORWARD COMPARTMENT ALLOWABLE PACKAGE SIZES										
HEIGHT IN.	WIDTH IN.									
	10	20	30	40	50	60	70	80	90	101.9
	LENGTH IN.									
64	293	273	253	233	213	193	172	152	130	
60	312	291	271	251	231	211	190	170	149	133
55	328	308	288	268	247	227	206	185	164	146
50	343	323	302	282	262	241	220	199	177	157
45	347	327	306	286	265	245	224	203	181	160
40	347	327	306	286	265	245	224	203	181	160
35	347	327	306	286	265	245	224	203	181	160
30	347	327	306	286	265	245	224	203	181	160
25	347	327	306	286	265	245	224	203	181	160
20	347	327	306	286	265	245	224	203	181	160
15	347	327	306	286	265	245	224	203	181	160
10	347	327	306	286	265	245	224	203	181	160
5	347	327	306	286	265	245	224	203	181	160

19.4 Aft LD Cargo Door

AFT COMPARTMENT ALLOWABLE PACKAGE SIZES										
HEIGHT IN.	WIDTH IN.									
	10	20	30	40	50	60	70	80	90	101.9
	LENGTH IN.									
64	293	273	253	233	213	193	172	152	130	
60	312	291	271	251	231	211	190	170	149	133
55	328	308	288	268	247	227	206	185	164	146
50	343	323	302	282	262	241	220	199	177	157
45	347	327	306	286	265	245	224	203	181	160
40	347	327	306	286	265	245	224	203	181	160
35	347	327	306	286	265	245	224	203	181	160
30	347	327	306	286	265	245	224	203	181	160
25	347	327	306	286	265	245	224	203	181	160
20	347	327	306	286	265	245	224	203	181	160
15	347	327	306	286	265	245	224	203	181	160
10	347	327	306	286	265	245	224	203	181	160
5	347	327	306	286	265	245	224	203	181	160

UNCONTROLLED DOCUMENT

UNCONTROLLED DOCUMENT (28 NOVEMBER 2024 21:39:26)

UNCONTROLLED DOCUMENT

19.5 Bulk Cargo Door

BULK COMPARTMENT ALLOWABLE PACKAGE SIZES						
HEIGHT IN.	WIDTH IN.					
	5	10	15	20	25	33.2
	LENGTH IN.					
40	169	169	154	142	133	123
36	169	169	161	147	137	128
32	169	169	169	154	143	133
28	169	169	169	162	150	137
24	169	169	169	162	150	137
20	169	169	169	162	150	137
16	169	169	169	162	150	137
12	169	169	169	162	150	137
8	169	169	169	162	150	137
4	169	169	169	162	150	137

Note: To convert from inches to centimetres, multiply by 2.54

UNCONTROLLED DOCUMENT

UNCONTROLLED DOCUMENT

UNCONTROLLED DOCUMENT (28 NOVEMBER 2024 21:39:26)

UNCONTROLLED DOCUMENT

20. Contour Drawings

20.1 JI Contour

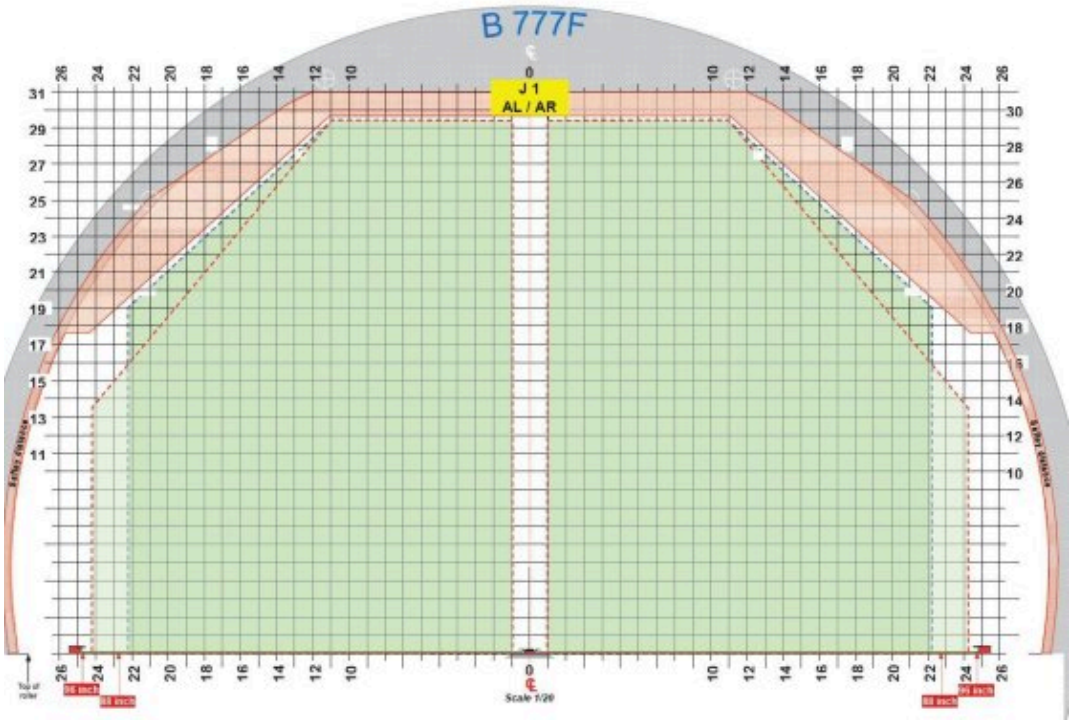

20.2 JIII Contour

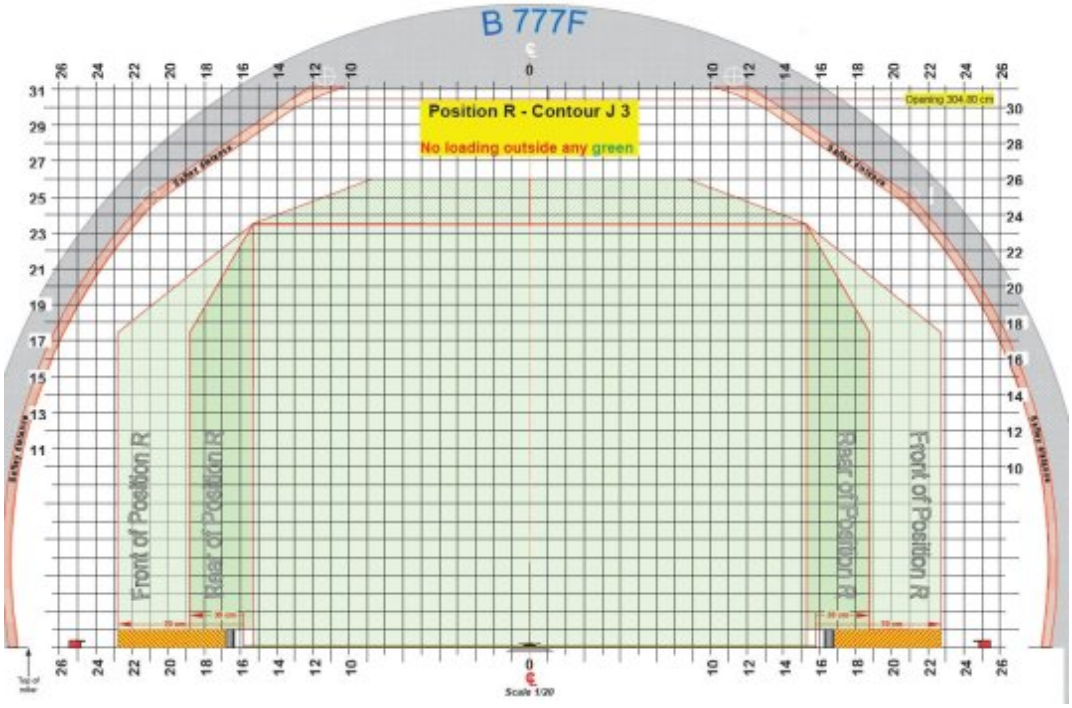

UNCONTROLLED DOCUMENT

UNCONTROLLED DOCUMENT (28 NOVEMBER 2024 21:39:26)

20.3 JIV Contour

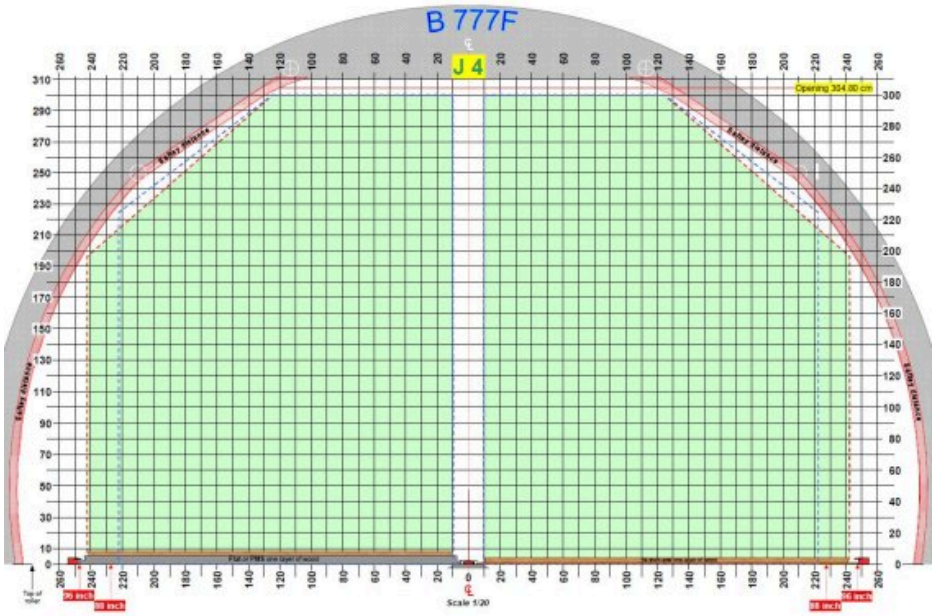

UNCONTROLLED DOCUMENT
UNCONTROLLED DOCUMENT

UNCONTROLLED DOCUMENT (28 NOVEMBER 2024 21:39:26)