UNCONTROLLED DOCUMENT

UNCONTROLLED DOCUMENT

MTL AN26
RAF Avia AN26B

Revision: 2
Date: 13 November 2024

1 RAF Avia Antonov 26B Registrations
2 Aircraft Dimensions
3 Aircraft Servicing Points and Specifications
4 Ground Support Equipment
5 Standard Turnaround Times
6 Safety Areas
7 Strong Wind Conditions
8 Aircraft Door Dimensions
9 Compartment Classification and Air-Conditioning
10 Aircraft Cabin Contour Dimensions
11 Maximum Position Weights
12 Aircraft ULD Compatibility
13 Loading and Un-Loading
14 Rigid, Oversized and Special Loads
15 Restricted Commodities Loading
16 Messaging and Reporting
17 Load Control Data
18 Maximum Package Dimensions

UNCONTROLLED DOCUMENT (13 NOVEMBER 2024 16:23:13)

Page	Date	Comment
15	13 November 2024	Guidance on the handling of special loads information added. *(Minor)*

UNCONTROLLED DOCUMENT

UNCONTROLLED DOCUMENT

UNCONTROLLED DOCUMENT

1. RAF Avia Antonov 26B Registrations

IATA Designator:	-
ICAO Designator:	**MTL**
Valid for:	**YLRAA, YLRAB, YLRAC, YLRAD, YLRAE.**

UNCONTROLLED DOCUMENT

UNCONTROLLED DOCUMENT

UNCONTROLLED DOCUMENT (13 NOVEMBER 2024 16:23:13)

2. Aircraft Dimensions

All dimensions in meters.

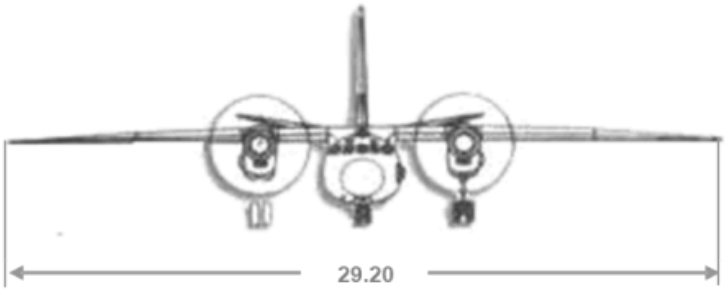

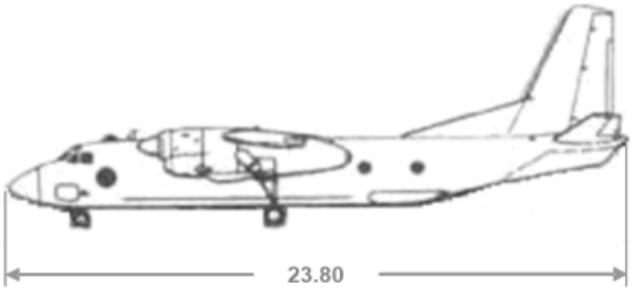

UNCONTROLLED DOCUMENT
UNCONTROLLED DOCUMENT

UNCONTROLLED DOCUMENT (13 NOVEMBER 2024 16:23:13)

3. Aircraft Servicing Points and Specifications

3.1 Servicing Points

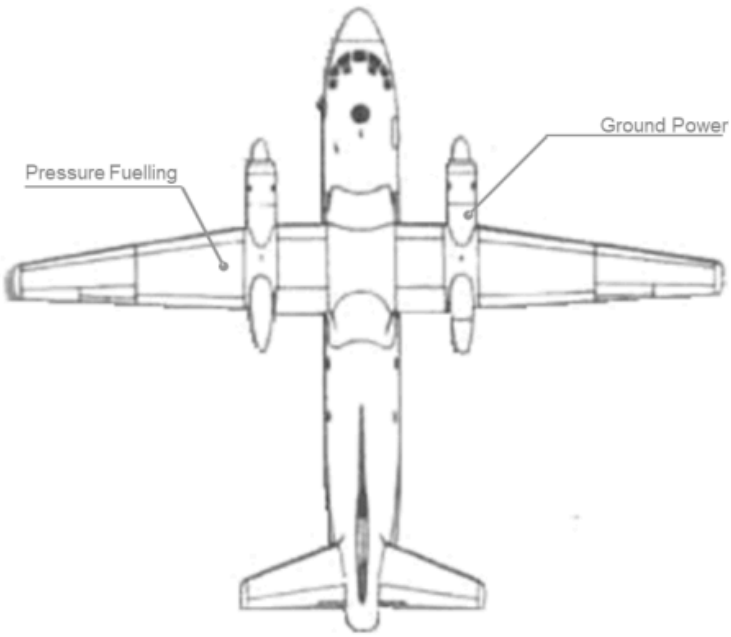

The APU outlet is in very close proximity to the GPU inlet. An incorrectly positioned GPU can pose a danger to handling crew, as the APU may give away a 3 meter flame on start-up. Exercise the utmost care during APU start-up and the positioning of staff and equipment during this procedure.

3.2 Servicing Specifications

System	Requirements	Notes
Ground Power Unit	28V DC	Portable GPU recommended
Fuel	Jet A1	

UNCONTROLLED DOCUMENT
UNCONTROLLED DOCUMENT

UNCONTROLLED DOCUMENT (13 NOVEMBER 2024 16:23:13)

4. Ground Support Equipment

4.1 Positioning of GSE

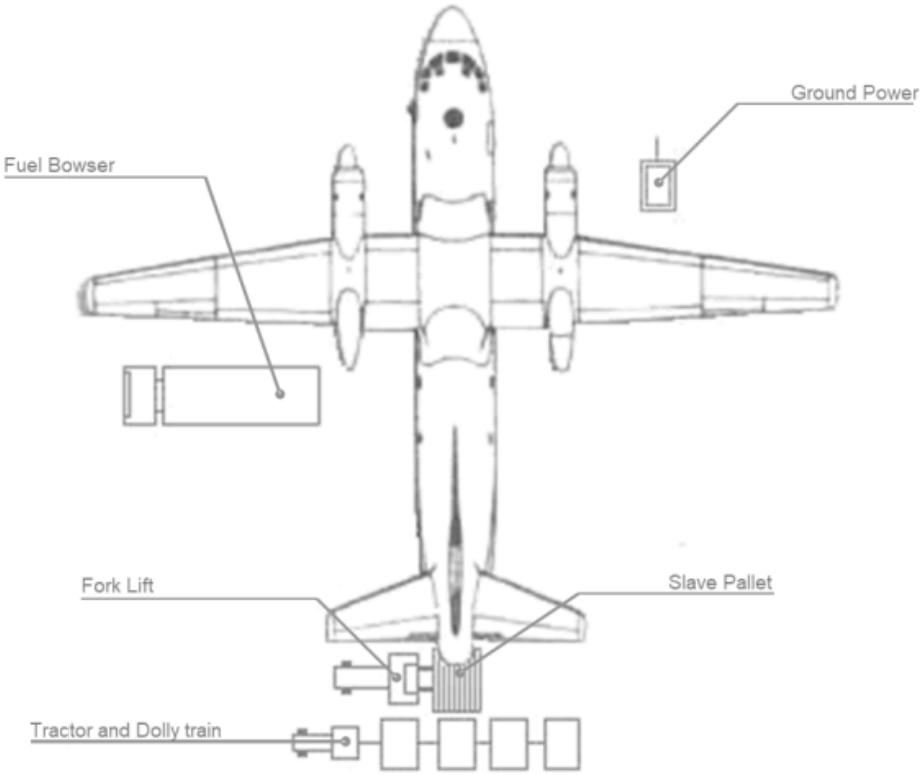

It is imperative that a forklift with sufficient lifting capacity is utilised to minimise the risk of tipping. A forklift with a minimum lifting capacity of 7.5 tons shall be used.
Care must be exercised to ensure ULDs are not lifted too high, risking an impact with the aircraft tail cone.

4.2 GSE Requirements

GSE	Type	Quantity
Fork Lift	7.5 tons minimum lifting capacity	1
Crew stairs	Self contained	N/A
Ground Power Unit	Diesel, Electric or Ground-Power	1
Slave Pallet	108”/88” capable	1
Tractor	N/A	1
Dolly Wagon	108”/88” capable	Up to 4

UNCONTROLLED DOCUMENT
UNCONTROLLED DOCUMENT

UNCONTROLLED DOCUMENT (13 NOVEMBER 2024 16:23:13)

5. Standard Turnover Times

Turn-around time for a transit stop: 00:25 hour (partial off- and on-load)
Turn-around time for an end stop: 00:35 hour (full off- and on-load)

UNCONTROLLED DOCUMENT
UNCONTROLLED DOCUMENT

UNCONTROLLED DOCUMENT (13 NOVEMBER 2024 16:23:13)

UNCONTROLLED DOCUMENT

6. Safety Areas

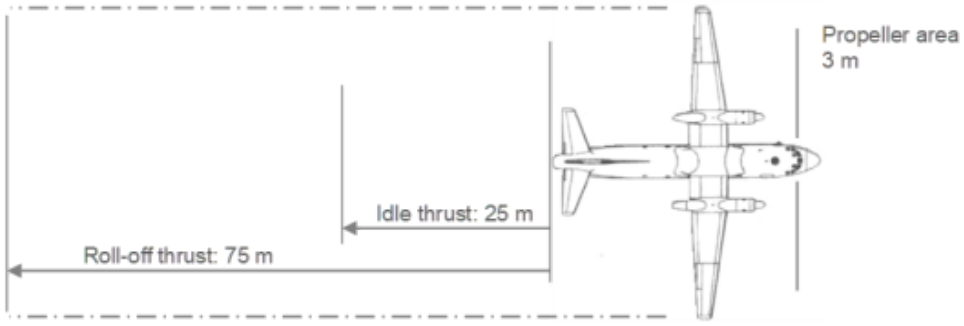

UNCONTROLLED DOCUMENT

UNCONTROLLED DOCUMENT

UNCONTROLLED DOCUMENT (13 NOVEMBER 2024 16:23:13)

UNCONTROLLED DOCUMENT

7. Strong Wind Conditions

All doors can be opened and left open, with no limits.

UNCONTROLLED DOCUMENT

UNCONTROLLED DOCUMENT

UNCONTROLLED DOCUMENT (13 NOVEMBER 2024 16:23:13)

8. Aircraft Door Dimensions

Door width, height, and sill height are defined as follows.

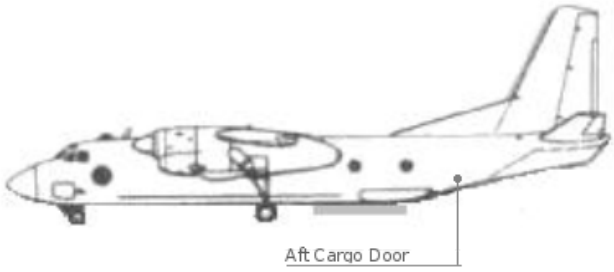

(This drawing is for illustration purposes only and may not be an exact representation of this aircraft type)

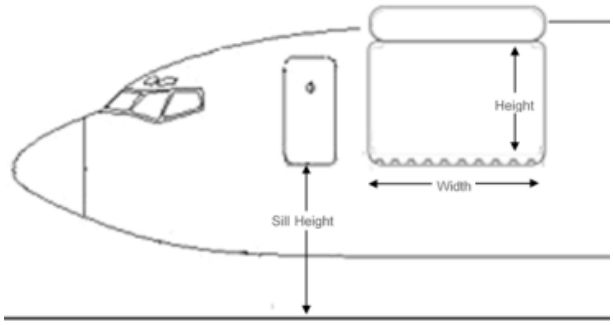

All dimensions are in centimetres (cm).

Door	Door Width	Door Height	Min. Door Sill Height	Max. Door Sill Height
AFT Cargo Door	225	165	140	150

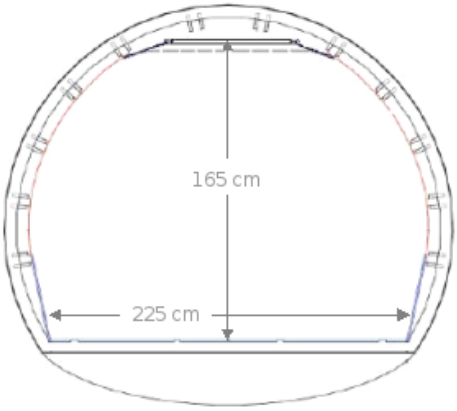

UNCONTROLLED DOCUMENT
UNCONTROLLED DOCUMENT

UNCONTROLLED DOCUMENT (13 NOVEMBER 2024 16:23:13)

UNCONTROLLED DOCUMENT

9. Compartment Classification and Air-Conditioning



9.1 Compartment Classification

Compartment		Features
ULD Positions	Position A loaded with 108”/88” ULD **with** aisle	- Classification B
		- Pressurisation
		- Smoke detection
		- **Position A only** accessible during flight

9.2 Air-Conditioning

	Main-deck
Temperature	0C - 30C
Heating	Yes
Heat Adjust	Yes
Cooling	Yes
Ventilation	Yes

UNCONTROLLED DOCUMENT

UNCONTROLLED DOCUMENT

UNCONTROLLED DOCUMENT (13 NOVEMBER 2024 16:23:13)

UNCONTROLLED DOCUMENT

10. Aircraft Cabin Contour Dimensions

10.1 Aircraft Layout Type 1

The aircraft has one contour zone: CI.



10.1.1 Contour CI

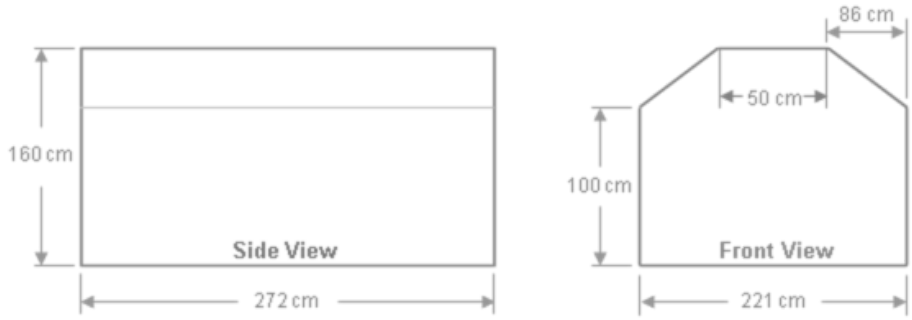

Note: Unless otherwise agreed with the operator, position A must be built with an aisle providing crew access to the emergency main-gear release, as illustrated by this drawing (area with diagonal stripes indicating aisle):



UNCONTROLLED DOCUMENT (13 NOVEMBER 2024 16:23:13)

11. Maximum Position Weights

11.1 Maximum Main-deck ULD Weights in Kilograms

Note: The load distribution of this aircraft shall be in accordance with the weight distribution tables applicable to the configuration used (shown below).

Valid for Configuration 1: 4 Longitudinal 108”/88” positions.

The weight in this configuration shall be distributed as follows:

	ULD Position			
ULD Size	A	B	C	D
108”/88”	29%	29%	24%	18%
Max floor load (Kg/m2)	800			

Assuming a maximum payload of 5500Kg is loaded, the max weight per position is:

	ULD Position			
ULD Size	A	B	C	D
108”/88”	1587	1587	1326	1000
Max floor load (Kg/m2)	800			

Valid for Configuration 2: 3 Longitudinal 125”/88” and 1 Lateral 53”/88” positions

The max weight of each position changes depending on if position D is utilised.

If position D is utilised, the weight shall be distributed as follows:

	ULD Position			
ULD Size	A	B	C	D
125”/88”	34%	34%	23%	
53”/88”				9%

Assuming a maximum payload of **5500Kg** is loaded, the max weight per position is:

	ULD Position			
ULD Size	A	B	C	D
125”/88”	1870	1870	1265	
53”/88”				495
Max floor load (Kg/m2)	800			

If position D is **not** utilised, the weight shall be distributed as follows:

	ULD Position			
ULD Size	A	B	C	D
125”/88”	35%	40%	25%	
53”/88”				

Assuming a maximum payload of **5500Kg** is loaded, the max weight per position is:

	ULD Position			
ULD Size	A	B	C	D
125”/88”	1925	2200	1375	
53”/88”				
Max floor load (Kg/m2)	800			

UNCONTROLLED DOCUMENT
UNCONTROLLED DOCUMENT

UNCONTROLLED DOCUMENT (13 NOVEMBER 2024 16:23:13)

12. Aircraft ULD Compatibility



Configuration 1: 4 Longitudinal 108”/88” positions



Configuration 2: 3 Longitudinal 125”/88” and 1 Lateral 53”/88” positions

The following ULD type loading restrictions apply. The ULD type can be loaded on positions marked with a ‘Y’. The ULD type cannot be loaded on positions marked with a ‘N’.

		ULD Type				
	Pos	ABU	PAG	PBJ	PEA	PEB
Configuration 1.	A	N	N	Y1	N	N
	B	Y	N	Y	N	N
	C	Y	N	Y	N	N
	D	Y	N	Y	N	N
Configuration 2.	A	N	Y1	N	N	N
	B	N	Y	N	N	N
	C	N	Y	N	N	N
	D	N	Y	N	Y	Y

Y1: Pallets in Position A must be built with an aisle providing access to the emergency exit.

UNCONTROLLED DOCUMENT
UNCONTROLLED DOCUMENT

UNCONTROLLED DOCUMENT (13 NOVEMBER 2024 16:23:13)

13. Loading and Un-loading

Risk of Tail-tipping.

13.1 Un-Loading Sequence

Un-load the ULDs on the main deck in the following numbered sequence, **and respect standard stage un-loading method**.



13.2 Loading Sequence

Load the ULDs on the main deck in the following numbered sequence, **and respect standard stage loading method**.



13.3 Loading Notes

13.3.1 Fork-lift Tipping

Due to the limited clearance under the tail, and the inherent tipping dangers associated with fork-lift/slave pallet operations, extreme care must be exercised during loading to prevent the fork-lift/slave pallet from tipping.

13.3.2 Tail-stand

For aircraft fitted with a tail-stand, it must be in correctly installed prior to any un-loading or loading activities.

UNCONTROLLED DOCUMENT
UNCONTROLLED DOCUMENT

UNCONTROLLED DOCUMENT (13 NOVEMBER 2024 16:23:14)

14. Rigid, Oversized and Special Loads

For guidance on the handling of special loads, please refer to the Special Loads Regional Contact Instructions outlined in Chapter 6 **6.12.22.3 - Determining Loadability of Special Loads**. Where direct operator approval is required, the Regional Airside Team will liaise with Global Airside as needed.

14.1 Floating / Heavy Pallets

ULDs which are heavier than the standard allowed maximum gross weight must not be carried on this aircraft.

14.2 Piercing Cargo

Piercing cargo may not be loaded on the first and/or last loaded position on the aircraft.

14.3 Aircraft Engines

This aircraft type does not support the carriage of aircraft engines.

14.4 Live Animals

14.4.1 Horses

This aircraft type does not support the carriage of horses.

14.4.2 Other Live Animals

The following table provides a list of commonly transported animals. If there is a requirement to transport animals not listed below, contact your Special Loads Regional Contact.

	Main-Deck
Day-old chickens	Yes
Dogs or Cats	
Small Mammals or Birds	
Tropical Fish	
Reptiles or Amphibians	
Eels	
Crustaceans or Molluscs	
Insects	
Hatching eggs	

UNCONTROLLED DOCUMENT
UNCONTROLLED DOCUMENT

UNCONTROLLED DOCUMENT (13 NOVEMBER 2024 16:23:14)

UNCONTROLLED DOCUMENT

15. Restricted Commodities Loading

15.1 Radioactive (RRY), Magnetised (MAG) and Cargo Aircraft Only (CAO)

The following Dangerous Good type loading restrictions apply. The Dangerous Good type can be loaded on positions marked with a 'Y'. The Dangerous Good type cannot be loaded on positions marked with a 'N'.

	Position			
DG Type	A	B	C	D
MAG	N	N	Y	Y
CAO	Y	Y	Y	Y
RRY (Class 7)	N	N	Y	Y

Notes: Cargo Aircraft Only (CAO) can be loaded on any Main Deck position A to D provided they are loaded accessible. Accessible means that:

- The CAO is loaded on a pallet with aisle allowing access to the rear of the ULD.
- All positions forward of the CAO are loaded on pallets with aisle.

15.2 Dry Ice

Please see the Global Supplementary Operational Document **Dry Ice Consolidation table** for the current maximum allowed Dry Ice limits.

15.3 Dry Ice (ICE) and Live Animals (AVI)

There is no additional weight limit for the loading of Dry Ice (ICE) together with Live Animals (AVI) on the Main-deck.

When loading AVI and ICE together in the main-deck, **keep a minimum distance of one loading position, and load AVI forward of ICE.**

Load the AVI higher than the ICE.

UNCONTROLLED DOCUMENT (13 NOVEMBER 2024 16:23:14)

UNCONTROLLED DOCUMENT

16. Messaging and Reporting

16.1 Messaging

Standard messaging rules apply.

Note: Specific messaging rules may apply depending on the area the aircraft is operating in. Check DHLAGOM for applicable regional variations.

16.2 Reporting

Standard reporting rules apply.

Note: Specific messaging rules may apply depending on the area the aircraft is operating in. Check DHLAGOM for applicable regional variations.

UNCONTROLLED DOCUMENT

UNCONTROLLED DOCUMENT

UNCONTROLLED DOCUMENT (13 NOVEMBER 2024 16:23:14)

UNCONTROLLED DOCUMENT

17. Load Control Data

17.1 Standard Mass Additions

17.1.1 Additional Crew Members (ACM)

Maximum Number of ACMs:	1
Mass of ACM:	85 kg

17.1.2 Fly Away Kit (FAK) and Ballast

Fly Away Kit (FAK):	-
Ballast:	-

17.2 Minimum Fuel and Standard Taxi Fuel

Minimum Fuel:	Not applicable.
Standard Taxi Fuel:	240 kg

17.3 LMC Restrictions

Computer Load sheet Maximum LMC:	Not applicable.
Manual Load sheet Maximum LMC:	+/- 100 kg

UNCONTROLLED DOCUMENT

UNCONTROLLED DOCUMENT

UNCONTROLLED DOCUMENT (13 NOVEMBER 2024 16:23:14)

UNCONTROLLED DOCUMENT

18. Maximum Package Dimensions

Maximum Usable dimensions:

- Length: 11.10 m
- Width: 2.25 m
- Height: 1.60 m

UNCONTROLLED DOCUMENT

UNCONTROLLED DOCUMENT

UNCONTROLLED DOCUMENT (13 NOVEMBER 2024 16:23:14)