UNCONTROLLED DOCUMENT





# SOP A306F
Solinair A300-600F

Revision: 2
Date: 16 October 2024

1 Solinair A300-600F Registrations
2 Aircraft Dimensions
3 Aircraft Servicing Points and Specifications
4 Ground Support Equipment
5 Standard Turnaround Times
6 Safety Areas
7 Strong Wind Conditions
8 Aircraft Door Dimensions
9 Compartment Classification and Air-Conditioning
10 Aircraft Cabin Contour Dimensions
11 Maximum Position Weights
12 Aircraft ULD Compatibility
13 Loading and Un-Loading
14 Rigid, Oversized and Special Loads
15 Restricted Commodities Loading
16 Messaging and Reporting
17 Load Control Data
18 Maximum Package Dimensions

UNCONTROLLED DOCUMENT

UNCONTROLLED DOCUMENT

| Page | Date | Comment |
|---|---|---|
| 18 | 16 October 2024 | ULD types no longer available in the network removed. *(Minor)* |
| 19 | 16 October 2024 | Loading of AAX restricted in Configuration D for positions positions A thru L to align with SABLE. *(Minor)* |
| 23 | 16 October 2024 | ULD types no longer available in the network removed. *(Minor)* |
| 28 | 16 October 2024 | Guidance on the handling of special loads information added. *(Minor)* |

UNCONTROLLED DOCUMENT

UNCONTROLLED DOCUMENT

## 1. Solinair A300-600F Registrations

| | |
|---|---|
| IATA Designator: | **-** |
| ICAO Designator: | **SOP** |
| Valid for: | **S5ABW, S5ABO (Formerly MNG TC-MCH).** |

**Note:**

Aircraft contained within this entry have been converted by different companies and may have different characteristics. Where differences occur, the applicable aircraft registrations will be displayed at the top of the sub-chapter header.

UNCONTROLLED DOCUMENT
UNCONTROLLED DOCUMENT

## 2. Aircraft Dimensions

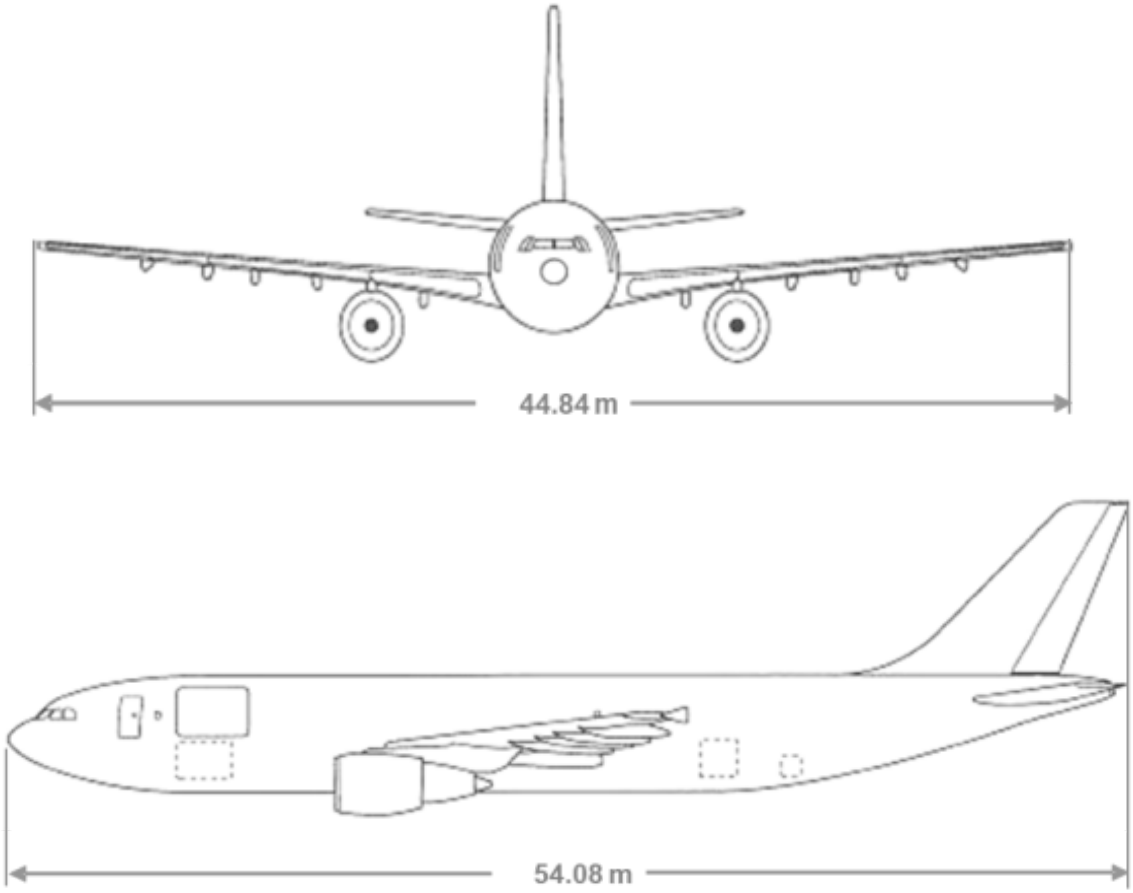


UNCONTROLLED DOCUMENT
UNCONTROLLED DOCUMENT



UNCONTROLLED DOCUMENT (16 OCTOBER 2024 16:17:08)

UNCONTROLLED DOCUMENT

# 3. Aircraft Servicing Points and Specifications

## 3.1 Servicing Points

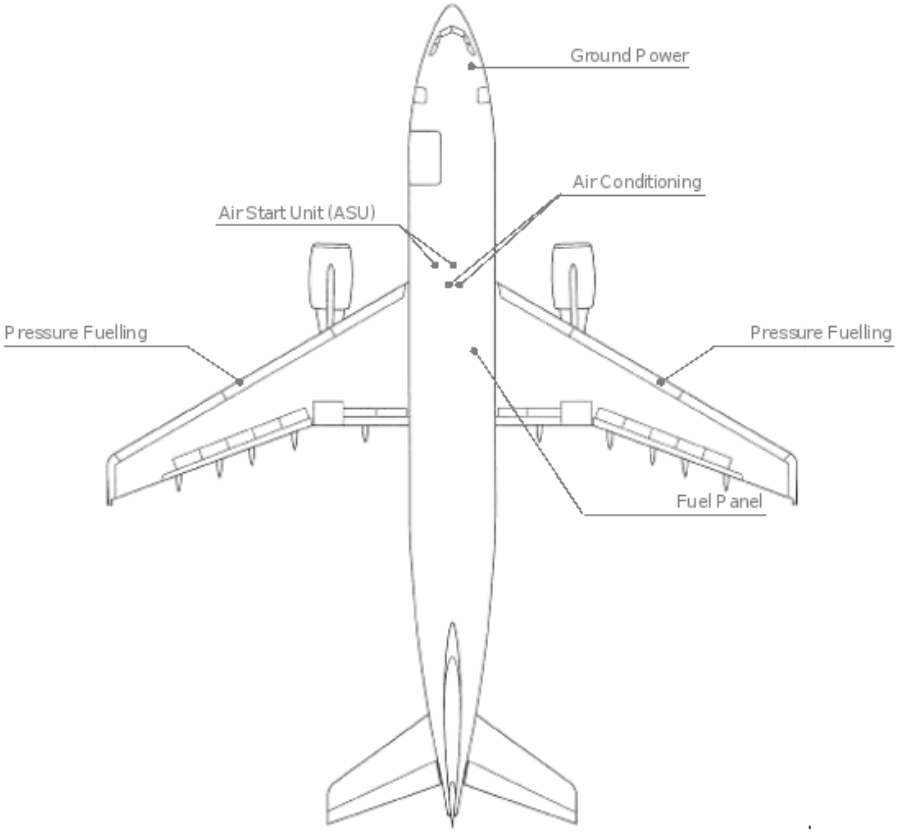


## 3.2 Servicing Specifications

| System | Requirements | Notes |
|---|---|---|
| Air Conditioning Unit | Maximum Flow Rate – dependant on ambient temperature. | 2 ACU inlets available |
| Ground Power Unit (Electrical) | 115/200V AC / 90 kVA / 400Hz | |
| Fuel | Jet A1 | |
| Air Starter Unit (Pneumatic) | Minimum capacity and Max / Min pressure – dependant on ambient air temperature. | 2 ASU inlets available.<br>2 ASU's may be required, depending on flow rate and ambient temperature. |



UNCONTROLLED DOCUMENT (16 OCTOBER 2024 16:17:08)

UNCONTROLLED DOCUMENT

# 4. Ground Support Equipment

## 4.1 Positioning of GSE

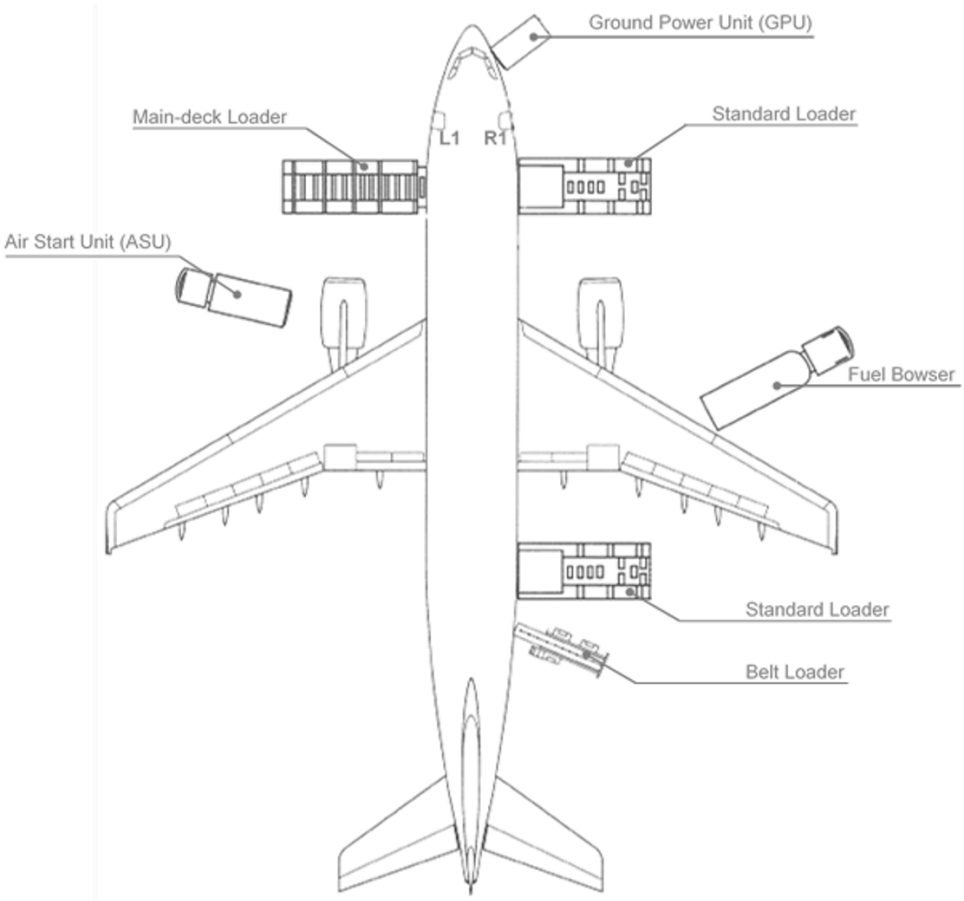


## 4.2 GSE Requirements

| GSE | Type | Quantity |
|---|---|---|
| High Loader | Main-deck<br>Standard | 1<br>2 |
| Crew stairs* | Platform height 4.62 – 4.67 meter | 1 |
| Ground Power Unit | Diesel, Electric or Ground-powered | 1 |
| Belt Loader | Standard (9 meter recommended) | 1 |
| Tractor | N/A | 6 |
| Dolly Wagon Main-deck | 125”/88” and 125”/96” capable | Up to 21 |
| Dolly Wagon Lower-deck | 125”/88” capable | Up to 7 |
| | 60.4”/61.5” or 60.4/125” capable | Up to 14 |
| Belly Container / Wagon | As required | According to load |



UNCONTROLLED DOCUMENT (16 OCTOBER 2024 16:17:08)

UNCONTROLLED DOCUMENT



## 5. Standard Turnaround Times

| | |
|---|---|
| Turn-around time for a transit stop: | 01:20 hour (partial off- and on-load) |
| Turn-around time for an end stop: | 01:35 hour (full off- and on-load) |

UNCONTROLLED DOCUMENT

UNCONTROLLED DOCUMENT



UNCONTROLLED DOCUMENT (16 OCTOBER 2024 16:17:08)

## 6. Safety Areas

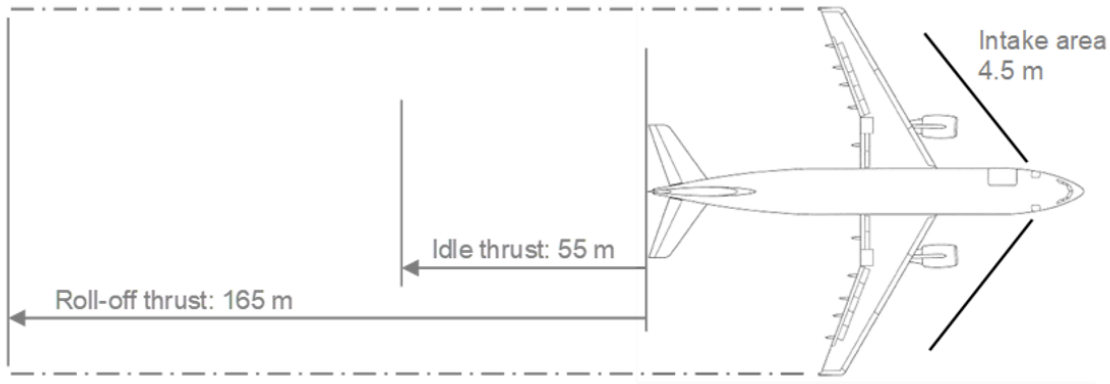


UNCONTROLLED DOCUMENT
UNCONTROLLED DOCUMENT



UNCONTROLLED DOCUMENT (16 OCTOBER 2024 16:17:08)

## 7. Strong Wind Conditions

If the wind conditions on the ramp reach the following speeds, the corresponding actions shall be taken.

| Wind Speed | Action |
|---|---|
| Up to 40 knots | Normal Operations: All doors can be opened and left open |
| More than 40 knots | Do not open additional doors |
| More than 40 knots | All open doors shall be closed immediately |

UNCONTROLLED DOCUMENT
UNCONTROLLED DOCUMENT



UNCONTROLLED DOCUMENT (16 OCTOBER 2024 16:17:08)

## 8. Aircraft Door Dimensions

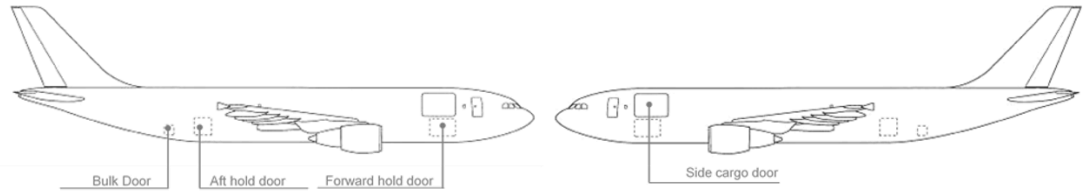


Door width, height, and sill height are defined as follows.

(This drawing is for illustration purposes only and may not be an exact representation of this aircraft type)

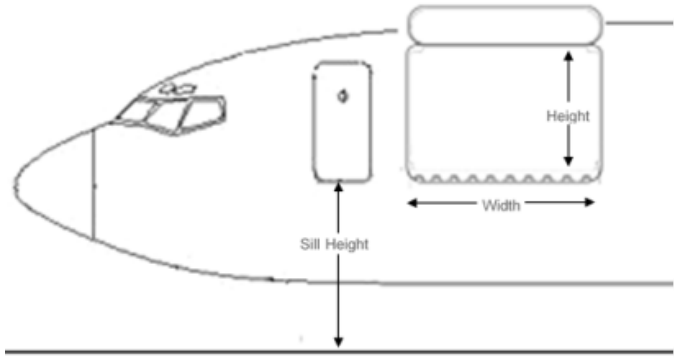


All dimensions are in centimetres (cm).

Valid for registrations: **S5ABW**

| Door | Door Width | Door Height | Min. Door Sill Height | Max. Door Sill Height |
|---|---|---|---|---|
| Crew Door | - | - | 441 | 458 |
| Side Cargo Door | 358 | 256 | 437 | 448 |
| Forward Hold | 245 | 170* | 249 | 265 |
| Aft Hold | 181 | 170* | 298 | 318 |
| Bulk Hold | 95 | 64 | 304 | 326 |

Valid for registrations: **S5ABO**

| Door | Door Width | Door Height | Min. Door Sill Height | Max. Door Sill Height |
|---|---|---|---|---|
| Crew Door | - | - | 441 | 458 |
| Side Cargo Door | 358 | 251 | 437 | 448 |
| Forward Hold | 245 | 170* | 249 | 265 |
| Aft Hold | 181 | 168* | 298 | 318 |
| Bulk Hold | 95 | 64 | 304 | 326 |

* Maximum height for a Lower-deck ULD is 164 cm (64 inches)



UNCONTROLLED DOCUMENT (16 OCTOBER 2024 16:17:08)

UNCONTROLLED DOCUMENT

## 9. Compartment Classification and Air-Conditioning

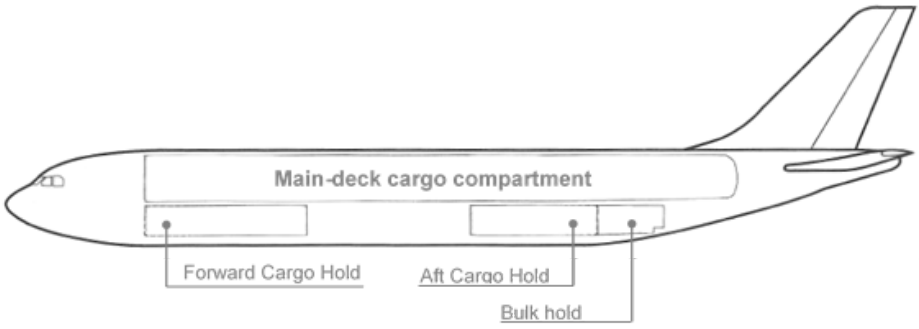


### 9.1 Compartment Classification

| Compartment | | Features |
|---|---|---|
| **Main-deck** | Position AL loaded with 88" ULD **with** 50cm (18") isle | - Classification **E** |
| | | - Pressurisation |
| | | - Smoke Detection |
| | | - **Accessible** during flight |
| | Position AL loaded with 88" ULD **without** 50 cm (18") aisle | - Classification **B** |
| | | - Pressurisation |
| | | - Smoke Detection |
| | | - **In-accessible** during flight |
| **Lower-deck**<br>All Compartments | | - Classification **C** |
| | | - Pressurisation |
| | | - Smoke Detection |
| | | - Fire Suppression |
| | | - **In-accessible** during flight |

### 9.2 Air-Conditioning

| | Main-deck | Forward Hold | Aft Hold | Bulk |
|---|---|---|---|---|
| Temperature | 7C to 29C | NO | | 5C to 25C |
| Heating | Yes | NO | | Yes |
| Heat adjust | Yes | NO | | Automatic with Main-deck |
| Cooling | Yes | NO | | Yes |
| Ventilation | Yes | NO | | Yes |



UNCONTROLLED DOCUMENT (16 OCTOBER 2024 16:17:08)

## 10. Aircraft Cabin Contour Dimensions

The aircraft is divided into three contour zones: I, II and III.

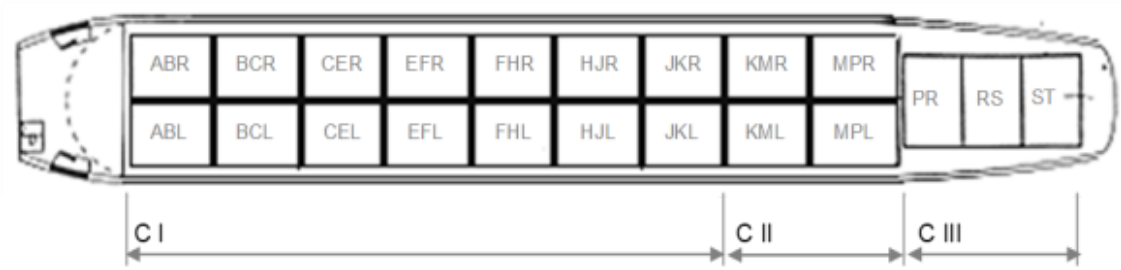


**Note:** The above contour zones apply to S5ABW and S5ABO, but the position naming convention for S5ABO is different.

As an example, this drawing illustrates a cross-section of contour zone I.

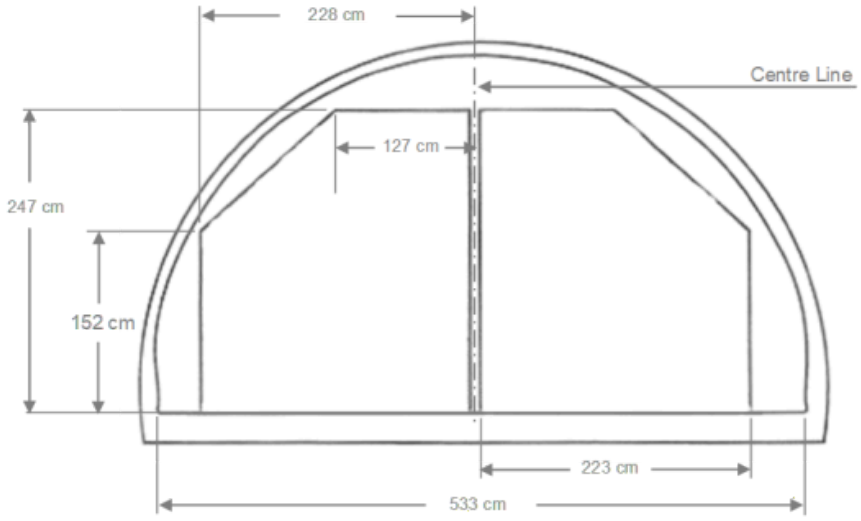


**Note:** All heights are given from top of rollers.

UNCONTROLLED DOCUMENT
UNCONTROLLED DOCUMENT



UNCONTROLLED DOCUMENT (16 OCTOBER 2024 16:17:08)

UNCONTROLLED DOCUMENT

### 10.1 Contour I

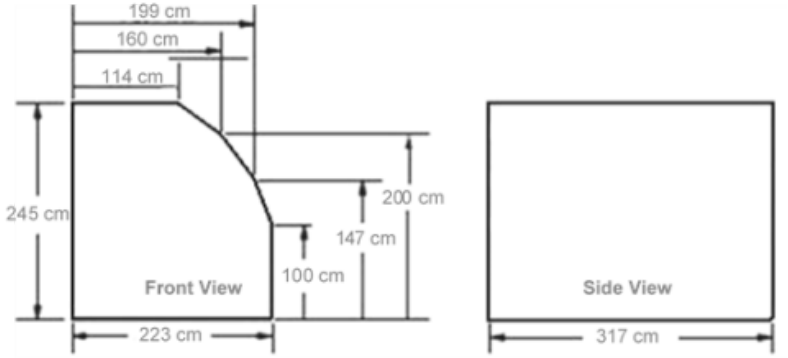


### 10.2 Contour II

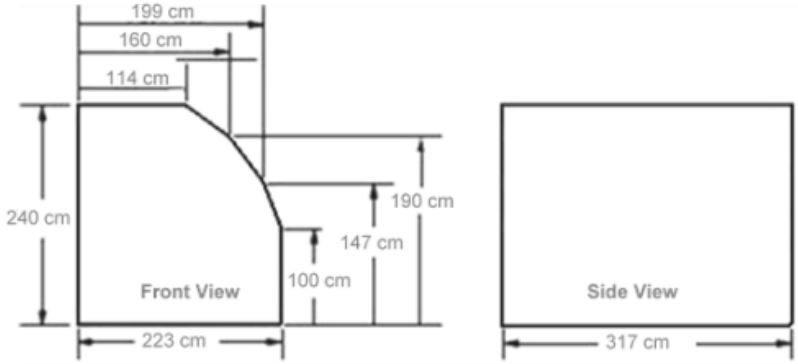


### 10.3 Contour III

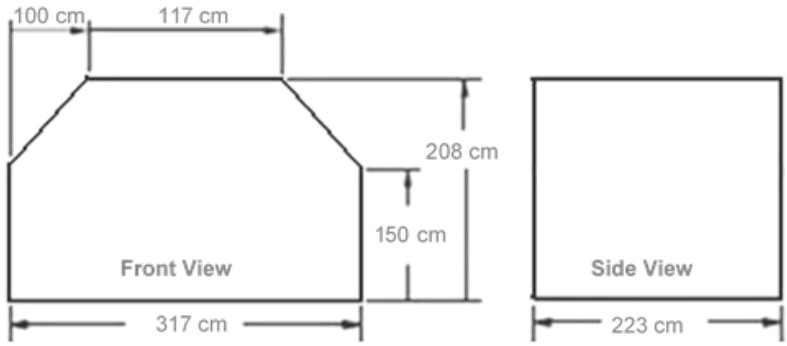


UNCONTROLLED DOCUMENT



UNCONTROLLED DOCUMENT (16 OCTOBER 2024 16:17:08)

UNCONTROLLED DOCUMENT



UNCONTROLLED DOCUMENT

UNCONTROLLED DOCUMENT

## 10.4 Centreline 125”/88” or 125”/96” Contours

**Lateral 125”/88” (A thru K) or 125”/96” (AA thru JJ)**

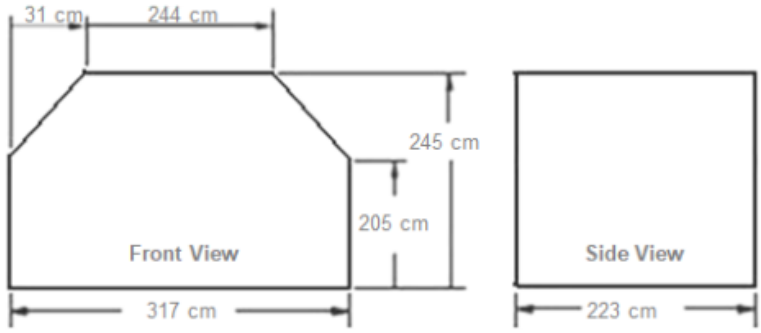


**Lateral 125”/88” (L thru P) or 125”/96” (KK thru MM)**

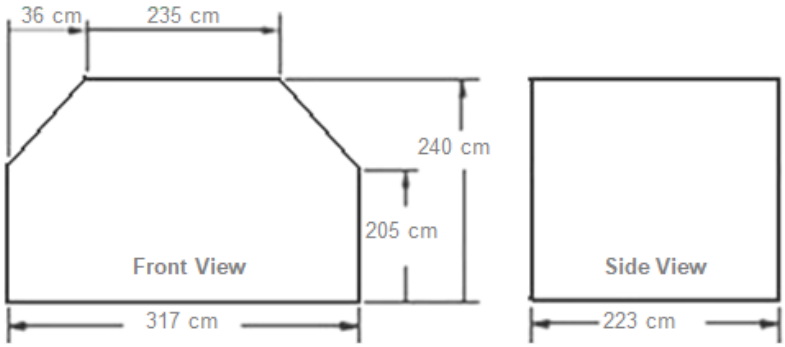


**Longitudinal 125”/96” (AB thru JK):**

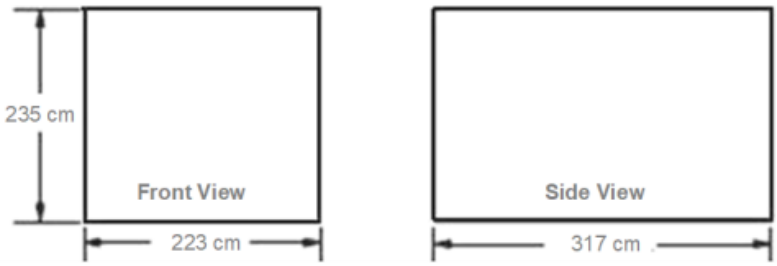


**Note:** AMJ loadable with sloped side facing left (towards door)



UNCONTROLLED DOCUMENT (16 OCTOBER 2024 16:17:08)

UNCONTROLLED DOCUMENT

# 11. Maximum Position Weights

## 11.1 Maximum Main-deck ULD Weights in Kilograms

Valid for registrations: **S5ABW**

| | ULD Position | | | | | | | | | | | | | | |
|---|---|---|---|---|---|---|---|---|---|---|---|---|---|---|---|
| **ULD Config.** | **AB L/R** | **BC L/R** | **CE L/R** | **EF L/R** | **FH L/R** | **HJ L/R** | **JK L/R** | **KM L/R** | **MP L/R** | **PR** | **RS** | **ST** | | | |
| 88" Twin | 2000 | 2358 | 2537 | 4321 | | | 3181 | 2400 | 2090 | 2826 | | 2429 | | | |
| 96" Twin | 2000 | 2358 | 2537 | 4321 | | | 3181 | 2400 | | | | | | | |
| | **AB** | **BC** | **CE** | **EF** | **FH** | **HJ** | **JK** | | | | | | | | |
| 96" Long. | 4001 | | 4331 | 4281 | 6804 | | 4800 | | | | | | | | |
| | **A** | **B** | **C** | **D** | **E** | **F** | **G** | **H** | **J** | **K** | **L** | **M** | **P** | **R** | **S** |
| 88" Lateral | 2826 | 3070 | 3391 | | 5707 | 6033 | | | | 3581 | 3391 | 3189 | 2826 | | 2728 |
| | **AA** | **BB** | **CC** | **DD** | **EE** | **FF** | **GG** | **HH** | **JJ** | **KK** | **LL** | **MM** | **PP** | **RR** | |
| 96" Lateral | 3080 | 3426 | 3696 | 4274 | 5670 | | | | 4648 | 3696 | 3259 | 3080 | | 2705 | |

Valid for registrations: **S5ABO**

| | ULD Position | | | | | | | | | | | | | | |
|---|---|---|---|---|---|---|---|---|---|---|---|---|---|---|---|
| **ULD Config.** | **A1 L/R** | **A2 L/R** | **A3 L/R** | **A4 L/R** | **A5 L/R** | **A6 L/R** | **A7 L/R** | **A8 L/R** | **A9 L/R** | **A10C** | **A11C** | **A12C** | | | |
| 88" Twin | 1984 | | 2381 | 4286 | | | 2381 | | 1940 | 2564 | 2473 | 1977 | | | |
| | **B1 R/L** | **B2 R/L** | **B3 R/L** | **B4 R/L** | **B5 R/L** | **B6 R/L** | **B7 R/L** | **B8 R/L** | **B9C** | **B10C** | **B11C** | **B12C** | | | |
| 96" Twin | 1984 | | 2381 | 4286 | | | 2381 | | 3012 | 2834 | 2702 | 2035 | | | |
| | **C1C** | **C2C** | **C3C** | **C4C** | **C5C** | **C6C** | **C7C** | **C8C** | | | | | | | |
| 96" Long. | 3969 | | 4763 | 6577 | | | 4763 | | | | | | | | |
| | **D1C** | **D2C** | **D3C** | **D4C** | **D5C** | **D6C** | **D7C** | **D8C** | **D9C** | **D10C** | **D11C** | **D12C** | **D13C** | **D14C** | **D15C** |
| 88" Lateral | 2794 | | 3353 | | | 6036 | | | | 3353 | | 2794 | 2564 | 2473 | 1977 |
| | **E1C** | **E2C** | **E3C** | **E4C** | **E5C** | **E6C** | **E7C** | **E8C** | **E9C** | **E10C** | **E11C** | **E12C** | **E13C** | **E14C** | |
| 96" Lateral | 3048 | | 3658 | | 6584 | | | | 3658 | | 3012 | 2834 | 2702 | 2035 | |



UNCONTROLLED DOCUMENT (16 OCTOBER 2024 16:17:08)

## 11.2 Maximum Lower-deck Compartment Weights in Kilograms

### 11.2.1 Forward Hold

| Position | Max. Gross Weight per ULD (in kilograms) | | | |
|---|---|---|---|---|
| | 88"/125" | 96"/125" | 60.4"/125" (ALP) | 60.4"/61.5" (AKE, AKH) |
| 11P-22P | 4626 | 4626 | | |
| 11-23 | | | 3174 | |
| 11L/R-23L/R | | | | 1587 |

### 11.2.2 Aft Hold

| Position | Max. Gross Weight per ULD (in kilograms) | | |
|---|---|---|---|
| | 88"/125" | 60.4"/125" (ALP) | 60.4"/61.5" (AKE, AKH) |
| 31 L/R - 43 L/R | | 3174 | |
| | | | 1587 |

### 11.2.3 Bulk Hold

The bulk cargo hold is divided into 4 areas as follows.

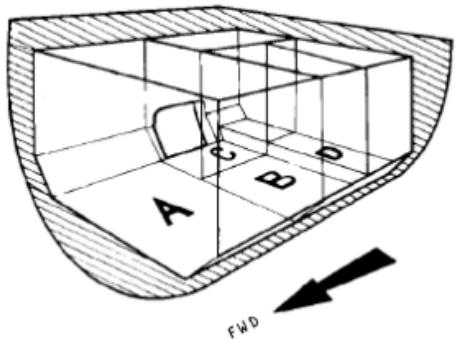


| Area Code | Volume (m3) | Max. Weight (kg) |
|---|---|---|
| A | 11.5 | 1847 |
| B | 4.1 | 657 |
| D | 1.7 | 272 |
| C | * | * |
| Useable Total | 17.3 | 2776 |

*The area 'C' is unusable due to the door.

UNCONTROLLED DOCUMENT
UNCONTROLLED DOCUMENT



UNCONTROLLED DOCUMENT (16 OCTOBER 2024 16:17:08)

# 12. Aircraft ULD Compatibility

## 12.1 Main Deck Configurations

The loading combinations shown here are examples only. More combinations are possible. Full information covering possible loading combinations, and how they interact, can be found in the Sable system.

Valid for Registration: **S5ABW**

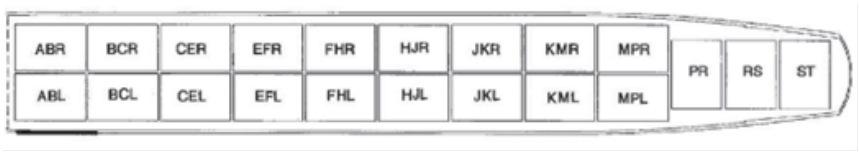


**Configuration A:** 3 Lateral Centre-line and 18 Longitudinal Twin-track 125”/88” positions

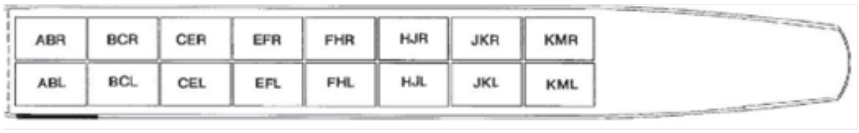


**Configuration B:** 16 Longitudinal Twin-track 125”/96” positions

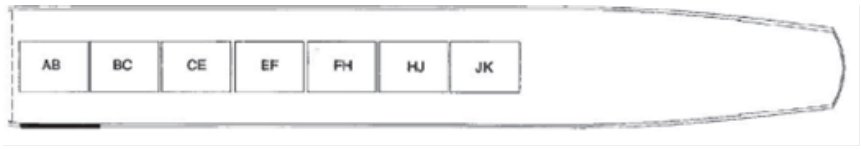


**Configuration C:** 7 Longitudinal Centre-line 125”/96” positions




**Configuration D:** 15 Lateral Centre-line 125”/88” positions




**Configuration E:** 14 Lateral Centre-line 125”/96” positions

UNCONTROLLED DOCUMENT
UNCONTROLLED DOCUMENT

Valid for Registration: **S5ABO**




**Configuration 1:** 3 Lateral Centre-line and 18 Longitudinal Twin-track 125”/88” positions

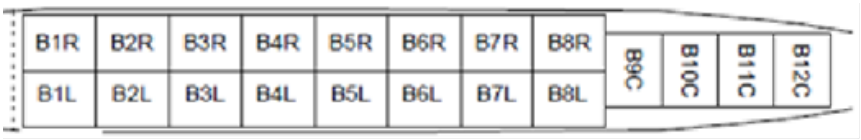


**Configuration 2:** 16 Longitudinal Twin-track 125”/96” positions

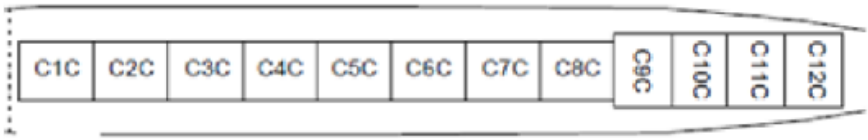


**Configuration 3:** 7 Longitudinal Centre-line 125”/96” positions




**Configuration 4:** 15 Lateral Centre-line 125”/88” positions

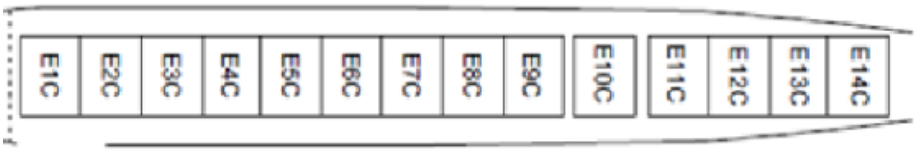


**Configuration 5:** 14 Lateral Centre-line 125”/96” positions

UNCONTROLLED DOCUMENT
UNCONTROLLED DOCUMENT



UNCONTROLLED DOCUMENT (16 OCTOBER 2024 16:17:08)

UNCONTROLLED DOCUMENT

### 12.2 Main Deck ULD Compatibility

Valid for Registration: **S5ABW**

The following ULD type loading restrictions apply for configurations A to C. The ULD type can be loaded on positions marked with a 'Y'. The ULD type cannot be loaded on positions marked with a 'N'.

| | | ULD Type | | | | | | | | | | |
|---|---|---|---|---|---|---|---|---|---|---|---|---|
| | Pos | AAA | AAC/ LAY | AAJ/ LAK | AAX | AMF | AMJ | AMP | AMV | PAG | PMC | RAP |
| Configuration A | AB L/R | N | Y | Y | Y | N | N | N | N | Y | N | N |
| | BC L/R | N | Y | Y | Y | N | N | N | N | Y | N | N |
| | CE L/R | N | Y | Y | Y | N | N | N | N | Y | N | N |
| | EF L/R | N | Y | Y | Y | N | N | N | N | Y | N | N |
| | FH L/R | N | Y | Y | Y | N | N | N | N | Y | N | N |
| | HJ L/R | N | Y | Y | Y | N | N | N | N | Y | N | N |
| | JK L/R | N | Y | Y | Y | N | N | N | N | Y | N | N |
| | KM L/R | N | Y | Y | Y1 | N | N | N | N | Y | N | N |
| | MP L/R | N | Y | Y | Y1 | N | N | N | N | Y | N | N |
| | PR | Y | Y | Y | N | N | N | N | N | Y | N | Y |
| | RS | Y | Y | Y | N | N | N | N | N | Y | N | Y |
| | ST | Y | Y | Y | N | N | N | N | N | Y | N | N |
| Configuration B | AB L/R | N | N | N | N | N | N | N | N | N | Y | N |
| | BC L/R | N | N | N | N | N | N | N | Y | N | Y | N |
| | CE L/R | N | N | N | N | N | N | N | Y | N | Y | N |
| | EF L/R | N | N | N | N | N | N | N | Y | N | Y | N |
| | FH L/R | N | N | N | N | N | N | N | Y | N | Y | N |
| | HJ L/R | N | N | N | N | N | N | N | Y | N | Y | N |
| | JK L/R | N | N | N | N | N | N | N | Y3 | N | Y | N |
| | KM L/R | N | N | N | N | N | N | N | N | N | Y | N |
| Configuration C | AB | N | N | N | N | N | Y2 | N | N | N | Y | N |
| | BC | N | N | N | N | N | Y2 | N | N | N | Y | N |
| | CE | N | N | N | N | N | Y2 | N | N | N | Y | N |
| | EF | N | N | N | N | N | Y2 | N | N | N | Y | N |
| | FG | N | N | N | N | N | Y2 | N | N | N | Y | N |
| | GH | N | N | N | N | N | Y2 | N | N | N | Y | N |
| | HJ | N | N | N | N | N | Y2 | N | N | N | Y | N |

Y1: AAX serial ranges 1000-1583, 3339-3856, 4057-4168, 6694-7143, 8234-8433 and 8474-9999 not allowed

Y2: AMJ must be loaded with the sloped side facing left (towards door)

Y3: AMV must not be loaded on JKL



UNCONTROLLED DOCUMENT (16 OCTOBER 2024 16:17:08)

Valid for Registration: **S5ABW**

The following ULD type loading restrictions apply for configurations D to E. The ULD type can be loaded on positions marked with a 'Y'. The ULD type cannot be loaded on positions marked with a 'N'.

| | | ULD Type | | | | | | | | | | |
|---|---|---|---|---|---|---|---|---|---|---|---|---|
| | Pos | AAA | AAC/ LAY | AAJ/ LAK | AAX | AMF | AMJ | AMP | AMV | PAG | PMC | RAP |
| Configuration D | A | Y | Y | Y | N | N | N | N | N | Y | N | Y4 |
| | B | Y | Y | Y | N | N | N | N | N | Y | N | Y4 |
| | C | Y | Y | Y | N | N | N | N | N | Y | N | Y |
| | D | Y | Y | Y | N | N | N | N | N | Y | N | Y |
| | E | Y | Y | Y | N | N | N | N | N | Y | N | Y |
| | F | Y | Y | Y | N | N | N | N | N | Y | N | Y |
| | G | Y | Y | Y | N | N | N | N | N | Y | N | Y |
| | H | Y | Y | Y | N | N | N | N | N | Y | N | Y |
| | J | Y | Y | Y | N | N | N | N | N | Y | N | Y |
| | K | Y | Y | Y | N | N | N | N | N | Y | N | Y |
| | L | Y | Y | Y | N | N | N | N | N | Y | N | Y |
| | M | Y | Y | Y | N | N | N | N | N | Y | N | Y |
| | P | Y | Y | Y | N | N | N | N | N | Y | N | Y |
| | R | Y | Y | Y | N | N | N | N | N | Y | N | Y |
| | S | Y | Y | Y | N | N | N | N | N | Y | N | N |
| Configuration E | AA | N | N | N | N | Y | N | Y | N | N | Y | N |
| | BB | N | N | N | N | Y | N | Y | N | N | Y | N |
| | CC | N | N | N | N | Y | N | Y | N | N | Y | N |
| | DD | N | N | N | N | Y | N | Y | N | N | Y | N |
| | EE | N | N | N | N | Y | N | Y | N | N | Y | N |
| | FF | N | N | N | N | Y | N | Y | N | N | Y | N |
| | GG | N | N | N | N | Y | N | Y | N | N | Y | N |
| | HH | N | N | N | N | Y | N | Y | N | N | Y | N |
| | JJ | N | N | N | N | Y | N | Y | N | N | Y | N |
| | KK | N | N | N | N | Y | N | Y | N | N | Y | N |
| | LL | N | N | N | N | N | N | Y | N | N | Y | N |
| | MM | N | N | N | N | N | N | Y | N | N | Y | N |
| | PP | N | N | N | N | N | N | Y | N | N | Y | N |
| | RR | N | N | N | N | N | N | Y | N | N | Y | N |

Y4: Active RAP not allowed

UNCONTROLLED DOCUMENT
UNCONTROLLED DOCUMENT



UNCONTROLLED DOCUMENT (16 OCTOBER 2024 16:17:08)

Valid for Registration: **S5ABO**

The following ULD type loading restrictions apply for configurations A to C. The ULD type can be loaded on positions marked with a 'Y'. The ULD type cannot be loaded on positions marked with a 'N'.

| | | ULD Type | | | | | | | | | | |
|---|---|---|---|---|---|---|---|---|---|---|---|---|
| | Pos | AAA | AAC/ LAY | AAJ/ LAK | AAX | AMF | AMJ | AMP | AMV | PAG | PMC | RAP |
| Configuration 1 | A1 L/R | N | Y | Y | Y1 | N | N | N | N | Y | N | N |
| | A2 L.R | N | Y | Y | Y1 | N | N | N | N | Y | N | N |
| | A3 L/R | N | Y | Y | Y1 | N | N | N | N | Y | N | N |
| | A4 L/R | N | Y | Y | Y1 | N | N | N | N | Y | N | N |
| | A5 L/R | N | Y | Y | Y1 | N | N | N | N | Y | N | N |
| | A6 L/R | N | Y | Y | Y1 | N | N | N | N | Y | N | N |
| | A7 L/R | N | Y | Y | Y1 | N | N | N | N | Y | N | N |
| | A8 L/R | N | Y | Y | Y1 | N | N | N | N | Y | N | N |
| | A9 L/R | N | Y | Y | Y1 | N | N | N | N | Y | N | N |
| | A10C | Y | Y | Y | N | N | N | N | N | Y | N | Y |
| | A11C | Y | Y | Y | N | N | N | N | N | Y | N | Y |
| | A12C | Y | Y | Y | N | N | N | N | N | Y | N | N |
| Configuration 2 | B1 L/R | N | N | N | N | N | N | N | N | N | Y | N |
| | B2 L/R | N | N | N | N | N | N | N | Y | N | Y | N |
| | B3 L/R | N | N | N | N | N | N | N | Y | N | Y | N |
| | B4 L/R | N | N | N | N | N | N | N | Y | N | Y | N |
| | B5 L/R | N | N | N | N | N | N | N | Y | N | Y | N |
| | B6 L/R | N | N | N | N | N | N | N | Y | N | Y | N |
| | B7 L/R | N | N | N | N | N | N | N | Y3 | N | Y | N |
| | B8 L/R | N | N | N | N | N | N | N | N | N | Y | N |
| | B9C | N | N | N | N | N | N | N | N | N | Y | N |
| | B10C | N | N | N | N | N | N | N | N | N | Y | N |
| | B11C | N | N | N | N | N | N | N | N | N | Y | N |
| | B12C | N | N | N | N | N | N | N | N | N | Y | N |
| Configuration 3 | C1C | N | N | N | N | N | Y2 | N | N | N | Y | N |
| | C2C | N | N | N | N | N | Y2 | N | N | N | Y | N |
| | C3C | N | N | N | N | N | Y2 | N | N | N | Y | N |
| | C4C | N | N | N | N | N | Y2 | N | N | N | Y | N |
| | C5C | N | N | N | N | N | Y2 | N | N | N | Y | N |
| | C6C | N | N | N | N | N | Y2 | N | N | N | Y | N |
| | C7C | N | N | N | N | N | Y2 | N | N | N | Y | N |
| | C8C | N | N | N | N | N | Y2 | N | N | N | Y | N |
| | C9C | N | N | N | N | N | N | N | N | N | Y | N |
| | C10C | N | N | N | N | N | N | N | N | N | Y | N |
| | C11C | N | N | N | N | N | N | N | N | N | Y | N |
| | C12C | N | N | N | N | N | N | N | N | N | Y | N |

Y1: AAX serial ranges 1000-1583, 3339-3856, 4057-4168, 6694-7143, 8234-8433 and 8474-9999 not allowed

Y2: AMJ must be loaded with the sloped side facing left (towards door)

Y3: AMV must not be loaded on B7L



UNCONTROLLED DOCUMENT (16 OCTOBER 2024 16:17:08)

Valid for Registration: **S5ABO**

The following ULD type loading restrictions apply for configurations A to C. The ULD type can be loaded on positions marked with a 'Y'. The ULD type cannot be loaded on positions marked with a 'N'.

| | | ULD Type | | | | | | | | | | |
|---|---|---|---|---|---|---|---|---|---|---|---|---|
| | Pos | AAA | AAC/ LAY | AAJ/ LAK | AAX | AMF | AMJ | AMP | AMV | PAG | PMC | RAP |
| Configuration 4 | D1C | Y | Y | Y | N | N | N | N | N | Y | N | Y4 |
| | D2C | Y | Y | Y | N | N | N | N | N | Y | N | Y4 |
| | D3C | Y | Y | Y | N | N | N | N | N | Y | N | Y |
| | D4C | Y | Y | Y | N | N | N | N | N | Y | N | Y |
| | D5C | Y | Y | Y | N | N | N | N | N | Y | N | Y |
| | D6C | Y | Y | Y | N | N | N | N | N | Y | N | Y |
| | D7C | Y | Y | Y | N | N | N | N | N | Y | N | Y |
| | D8C | Y | Y | Y | N | N | N | N | N | Y | N | Y |
| | D9C | Y | Y | Y | N | N | N | N | N | Y | N | Y |
| | D10C | Y | Y | Y | N | N | N | N | N | Y | N | Y |
| | D11C | Y | Y | Y | N | N | N | N | N | Y | N | Y |
| | D12C | Y | Y | Y | N | N | N | N | N | Y | N | Y |
| | D13C | Y | Y | Y | N | N | N | N | N | Y | N | Y |
| | D14C | Y | Y | Y | N | N | N | N | N | Y | N | Y |
| | D15C | Y | Y | Y | N | N | N | N | N | Y | N | N |
| Configuration 5 | E1C | N | N | N | N | Y | N | Y | N | N | Y | N |
| | E2C | N | N | N | N | Y | N | Y | N | N | Y | N |
| | E3C | N | N | N | N | Y | N | Y | N | N | Y | N |
| | E4C | N | N | N | N | Y | N | Y | N | N | Y | N |
| | E5C | N | N | N | N | Y | N | Y | N | N | Y | N |
| | E6C | N | N | N | N | Y | N | Y | N | N | Y | N |
| | E7C | N | N | N | N | Y | N | Y | N | N | Y | N |
| | E8C | N | N | N | N | Y | N | Y | N | N | Y | N |
| | E9C | N | N | N | N | Y | N | Y | N | N | Y | N |
| | E10C | N | N | N | N | Y | N | Y | N | N | Y | N |
| | E11C | N | N | N | N | N | N | Y | N | N | Y | N |
| | E12C | N | N | N | N | N | N | Y | N | N | Y | N |
| | E13C | N | N | N | N | N | N | Y | N | N | Y | N |
| | E14C | N | N | N | N | N | N | Y | N | N | Y | N |

Y4: Active RAP not allowed

UNCONTROLLED DOCUMENT
UNCONTROLLED DOCUMENT



UNCONTROLLED DOCUMENT (16 OCTOBER 2024 16:17:08)

## 12.3 Lower Deck Configurations

### 12.3.1 Forward Hold




**Configuration 1:** 4 Lateral 125”/88” or 125”/96” positions




**Configuration 2:** 6 Lateral 125”/60.4” positions




**Configuration 3:** 12 Twin-track 61.5”/60.4” positions

### 12.3.2 Aft Hold




**Configuration 1:** 5 Lateral 125”/60.4”positions

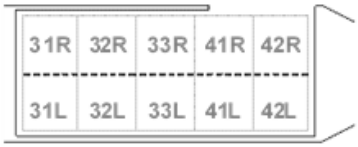


**Configuration 2:** 10 Twin-track 61.5”/60.4” positions

UNCONTROLLED DOCUMENT
UNCONTROLLED DOCUMENT



UNCONTROLLED DOCUMENT (16 OCTOBER 2024 16:17:08)

UNCONTROLLED DOCUMENT

### 12.4 Lower Deck ULD Compatibility

The following ULD type loading restrictions apply. The ULD type can be loaded on positions marked with a 'Y'. The ULD type cannot be loaded on positions marked with a 'N'.

| | | ULD Type | | | | | | | | |
|---|---|---|---|---|---|---|---|---|---|---|
| | Pos | AAJ/ LAK | AMF | AMP | RAP | PAG | PMC | AKE | ALF | ALP |
| FWD 1 | 11P | Y | Y | Y | Y | Y | Y | N | N | N |
| | 12P | Y | Y | Y | Y | Y | Y | N | N | N |
| | 21P | Y | Y | Y | Y | Y | Y | N | N | N |
| | 22P | Y | Y | Y | Y | Y | Y | N | N | N |
| FWD 2 | 11 | N | N | N | N | N | N | N | Y | Y |
| | 12 | N | N | N | N | N | N | N | Y | Y |
| | 13 | N | N | N | N | N | N | N | Y | Y |
| | 21 | N | N | N | N | N | N | N | Y | Y |
| | 22 | N | N | N | N | N | N | N | Y | Y |
| | 23 | N | N | N | N | N | N | N | Y | Y |
| FWD 3 | 11R/L | N | N | N | N | N | N | Y | N | N |
| | 12R/L | N | N | N | N | N | N | Y | N | N |
| | 13R/L | N | N | N | N | N | N | Y | N | N |
| | 21R/L | N | N | N | N | N | N | Y | N | N |
| | 22R/L | N | N | N | N | N | N | Y | N | N |
| | 23R/L | N | N | N | N | N | N | Y | N | N |
| AFT 1 | 31 | N | N | N | N | N | N | N | Y | Y |
| | 32 | N | N | N | N | N | N | N | Y | Y |
| | 33 | N | N | N | N | N | N | N | Y | Y |
| | 41 | N | N | N | N | N | N | N | Y | Y |
| | 42 | N | N | N | N | N | N | N | Y | Y |
| AFT 2 | 31R/L | N | N | N | N | N | N | Y | N | N |
| | 32R/L | N | N | N | N | N | N | Y | N | N |
| | 33R/L | N | N | N | N | N | N | Y | N | N |
| | 41R/L | N | N | N | N | N | N | Y | N | N |
| | 42R/L | N | N | N | N | N | N | Y | N | N |

**Note:**

All ALP and ALF ULDs must be inspected to ensure the base-plate is flat, to prevent the ULDs from jumping the locks. ULDs with a bent base-plate will not be sufficiently restrained.



UNCONTROLLED DOCUMENT (16 OCTOBER 2024 16:17:08)

UNCONTROLLED DOCUMENT



# 13. Loading and Un-Loading

## 13.1 Operation of Cargo Doors

Cargo Doors shall be operated one at a time, not simultaneously. Attempting to operate more than one cargo door at the same time may cause the hydraulic system to fail requiring engineering to rectify the situation.

## 13.2 Cargo Loading System (CLS)

The aircraft is equipped with Lower-deck PDUs, controlled by a joystick located in the doorway of the FWD and AFT holds, and may be used for both lateral and longitudinal movement of ULDs.

**Only suitably trained staff may use the CLS.**

UNCONTROLLED DOCUMENT

UNCONTROLLED DOCUMENT



UNCONTROLLED DOCUMENT (16 OCTOBER 2024 16:17:08)

### 13.3 Un-Loading Sequence

**Note**: Registration **S5ABO** has different position naming, unload/ loading sequences remain the same.

**Step 1:** Un-load the aft lower deck and in parallel start un-loading the bulk hold.

**Step 2:** Un-load the ULDs on the main deck in the following step sequence, and respect standard stage un-loading method.

a. Un-load ULDs in the following numbered sequence




b. Temporarily position KL and MPL onto positions CEL and EFL




c. Stage Un-load BCR to MPR, then temporarily position PR/RS/ST onto positions G/H/J




d. Un-load the remaining ULDs in the following numbered sequence

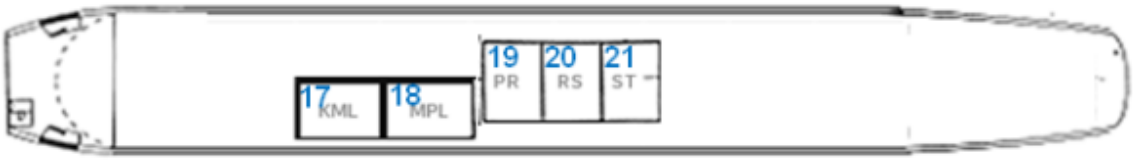


**Step 3:** Un-load the forward lower deck.

UNCONTROLLED DOCUMENT
UNCONTROLLED DOCUMENT



UNCONTROLLED DOCUMENT (16 OCTOBER 2024 16:17:08)

### 13.4 Loading Sequence

**Step 1:** Load the forward lower deck.

**Step 2:** Load the ULDs on the main deck in the following step sequence, and respect standard stage loading method.

a. Temporarily position ST/RS/PR onto positions J/H/G, then temporarily position MPL and KML onto positions EFL and CEL

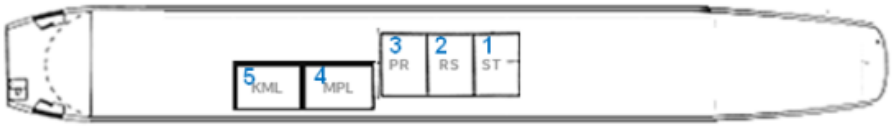


b. Move PR/RS/ST into final position, then stage load MPR to BCR.




c. Move MPL and KML into final position




d. Load the remaining ULDs in the following numbered sequence




**Step 3:** Load the aft lower deck.

UNCONTROLLED DOCUMENT
UNCONTROLLED DOCUMENT



UNCONTROLLED DOCUMENT (16 OCTOBER 2024 16:17:08)

## 13.5 Loading Notes

### 13.5.1 Ground Stability

The A300-600 Freighter is a stable aircraft, and it is possible to load and/or un-load more than one deck at the same time. Keep in mind that all loads aft of position E create an aft moment.

As a general rule, once the FWD hold has been loaded with a minimum of 6 tons, loading may proceed with minimum risk of tail-tipping regardless of method used. However, due care must be exercised if doing so, ensuring at all times that the actual loading and/or un-loading procedure employed does not result in a tail-tip condition.

A Solinair Load Master will be present during the loading and unloading of the aircraft.

### 13.5.2 CLS Operation

The aircraft is equipped with Lower-deck PDUs, controlled by a joystick located in the doorway of the FWD and AFT holds, and may be used for both lateral and longitudinal movement of ULDs.

### 13.5.3 Operation of cargo doors

Cargo Doors shall be operated one at a time, not simultaneously. Attempting to operate more than one cargo door at the same time may cause the hydraulic system to fail requiring engineering to rectify the situation.

### 13.5.4 Pallet Stacks

Loading of pallet stacks is not allowed on positions A, AA, ABL/ABR, AB, RR, S and ST. The loading of two 96" pallet stacks side-by-side in twin-track configuration shall be avoided. The planning of 96" pallet stacks in twin-track configuration that required the pallet stacks to pass each other whilst loading or unloading shall be avoided. This is due to the lack of separation clearance between the pallet stacks when passing by each other, causing the pallet sets to become entangled.

UNCONTROLLED DOCUMENT
UNCONTROLLED DOCUMENT



UNCONTROLLED DOCUMENT (16 OCTOBER 2024 16:17:08)

# 14. Rigid, Oversized and Special Loads

For guidance on the handling of special loads, please refer to the Special Loads Regional Contact Instructions outlined in Chapter 6 **6.12.22.3 - Determining Loadability of Special Loads**. Where direct operator approval is required, the Regional Airside Team will liaise with Global Airside as needed.

## 14.1 Floating / Heavy Pallets

ULDs which are heavier than the standard allowed maximum gross weight may be loaded on the main deck as centre load.

Permission must be sought from your Special Loads Regional contact before accepting any ULDs which require loading on a floating position.

The permission, including a special loading instruction, will be granted only after all details concerning the load and the loading have been checked and clarified.

## 14.2 Crushable Cargo Requirements

Compressible cargo must always be loaded forward of any other cargo on the Main-deck. Where Rigid Cargo has been identified, the following positions shall be loaded with Crushable Cargo ULDs suitable for protecting the barrier wall against unrestrained Rigid Cargo.

| Configuration | Positions with ULDs with crushable cargo suitable for protecting the barrier wall |
|---|---|
| Twin track 125/88 | ABR/ABL |
| Twin track 125/96 | ABR/ABL |
| Lateral Centre Line 88/125 | A |
| Lateral Centre Line 96/125 | AA |
| Longitudinal Centre Line 125/96 | AB |

**Note:** For **mixed** centre-line and twin-track loading, either positions ABL and ABR must be loaded with compressible cargo, or the first set of twin-track ULDs must be strapped and restrained to 9G.

The requirement to strap the first twin-track ULDs does not apply if there are AMJ containers loaded in front of the twin-track ULDs.

Registration **S5ABO** has different position naming, requirements remain the same.

## 14.3 Piercing Cargo

Piercing cargo may not be loaded on the first and last loaded position on the aircraft.



UNCONTROLLED DOCUMENT (16 OCTOBER 2024 16:17:08)

UNCONTROLLED DOCUMENT



## 14.4 Aircraft Engines

The following aircraft engines are loadable on the A300-600 Freighter.

| Engine Type | Loaded on | Allowed Loading Positions | Loading direction |
|---|---|---|---|
| BR710<br>BR715<br>CFM56-2 | 96” Pallet | Main deck centre-line configuration 3<br><br>Check height and observe overlap | Not important |
| CFM56-3<br>CFM56-5<br>CFM56-7<br>V2500 | | | |
| JT3<br>JT8<br>complete | | | |
| JT8<br>Partially assembled (without thrust reverser) | | Main deck | |
| | | 11P, 12P, 21P and 22P | Load through the hold door with the exhaust (aft end) of the engine first |

## 14.5 Live Animals

### 14.5.1 Horses

| | |
|---|---|
| **Max. Number of Horses per Aircraft** | 39 |
| **Max. Number of Horses per Box** | 3 |
| **Max. number of Horses per Groom** | - |
| **Approved Horse Transport ULDs** | DHL or IATA approved ULDs, i.e. HMJ or equivalent |
| **Approved Loading Configurations** | 125”/96” lateral centre-line (Config C) |

**Note:** Solinair require a suitable number of grooms to be onboard during flight, depending on the number of horses carried.



UNCONTROLLED DOCUMENT (16 OCTOBER 2024 16:17:08)

UNCONTROLLED DOCUMENT



### 14.5.2 Other Live Animals

The following table provides a list of commonly transported animals. If there is a requirement to transport animals not listed below, contact your Special Loads Regional contact.

| | Main-Deck | FWD Hold | AFT Hold | Compt. 5 |
|---|---|---|---|---|
| **Horses** | Yes (max 39 horses) | No | | |
| **Day-old chickens** | Yes (max 5 pallets) | No | No | No |
| **Monkeys** | Yes | | | |
| **Pigs** | | | | |
| **Cattle** | | | | |
| **Sheep or Goats** | | | | |
| **Dogs or Cats** | | | | |
| **Small mammals or Birds** | | | | |
| **Tropical Fish** | | | | |
| **Reptiles or Amphibians** | | | | |
| **Eels** | | | | |
| **Crustaceans or Molluscs** | | | | |
| **Bees** | | | | |
| **Hatching eggs** | | | | |

UNCONTROLLED DOCUMENT

UNCONTROLLED DOCUMENT



UNCONTROLLED DOCUMENT (16 OCTOBER 2024 16:17:08)

# 15. Restricted Commodities Loading

## 15.1 Radioactive (RRY), Magnetised (MAG) and Cargo Aircraft Only (CAO)

The following Dangerous Good type loading restrictions apply. The Dangerous Good type can be loaded on positions marked with a 'Y'. The Dangerous Good type cannot be loaded on positions marked with a 'N'.

| | Position | | | | | | | | | | | | |
|---|---|---|---|---|---|---|---|---|---|---|---|---|---|
| | Main-deck | | | | | | | | | | Lower-deck | | |
| **DG Type** | AB L/R | BC L/R | CE L/R | EF L/R | FH L/R | HJ L/R | JK L/R | KM L/R | MP L/R | PR-ST | FWD | AFT | Bulk |
| MAG | N | N | N | N | Y | Y | Y | Y | Y | Y | N | Y | N |
| CAO | Y* | Y* | Y* | Y* | Y* | Y* | Y* | Y* | Y* | N | Y | Y | Y |
| RRY (max. 50 TI combined) | N | N | Y | Y | Y | Y | Y | Y | Y | Y | N | Y | N |
| RRY (max. 200 TI combined) | N | N | N | N | Y | Y | Y | Y | Y | Y | N | Y | N |

**Note:** Cargo Aircraft Only (CAO) can be loaded on any Main Deck position ABL to MPL provided they are loaded accessible. Accessible means that:

- The CAO is loaded on a pallet
- All left side positions (ABL up to MPL) forward of the CAO are loaded with 88" pallets with 25cm (10") aisle

**Note**: Registration **S5ABO** has different position naming, loading rules remain the same.

## 15.2 Dry Ice

Please see the Global Supplementary Operational Document **Dry Ice Consolidation table** for the current maximum allowed Dry Ice limits.

**Dry Ice (ICE) and Live Animals (AVI)**

There is no weight limit for the loading of Dry Ice (ICE) together with Live Animals (AVI) on the Main-deck.

## 15.3 Lithium Batteries

Please see the Global Supplementary Operational Document **Lithium Battery Loadability Consolidation Table** for the current UN3480 Section IA/IB (RBI), UN3090 Section IA/IB (RBM), UN3481 Section I (RLI), UN3091 Section I (RLM) load ability limits.



UNCONTROLLED DOCUMENT (16 OCTOBER 2024 16:17:08)

UNCONTROLLED DOCUMENT



### 15.4 Energy Storage Devices / Batteries

Lithium battery shipments prepared for transport without additional TSO approved Fire Containment Covers (FCC's) and subject to Section IA & IB of Packing Instructions 965 and 968, or Section I of Packing Instructions 966, 967, 969 & 970 shall be loaded only in Class C Cargo Compartments of the Airbus A300-600P2F.

Lithium battery shipments prepared for transport and incorporating additional TSO approved Fire Containment Covers (FCC's) which may be applied at either shipment or ULD level, can be loaded in both Class C & E Cargo Compartments of the Airbus A300-600P2F.

These requirements apply to all Lithium Batteries which are currently fully restricted and which must appear on the NOTOC.

Class C Compartments include Lower Deck Compartments 1, 2, 3 and 4. Hold 5 shall NOT be used. Class E compartment is the main deck.

UNCONTROLLED DOCUMENT

UNCONTROLLED DOCUMENT



UNCONTROLLED DOCUMENT (16 OCTOBER 2024 16:17:08)

# 16. Messaging and Reporting

## 16.1 Messaging

Standard messaging rules apply.

## 16.2 Reporting

Standard reporting rules apply.

UNCONTROLLED DOCUMENT
UNCONTROLLED DOCUMENT

UNCONTROLLED DOCUMENT



# 17. Load Control Data

## 17.1 Standard Mass Additions

### 17.1.1 Additional Crew Members (ACM)

| | |
|---|---|
| Maximum Number of ACMs: | 7 |
| Mass of ACM: | 89 kg |

### 17.1.2 Fly Away Kit (FAK) and Ballast

FAK is not carried as standard on this aircraft.

Ballast is not carried as standard on this aircraft.

## 17.2 Minimum Fuel and Standard Taxi Fuel

| | |
|---|---|
| Minimum Fuel: | 8700 kg |
| Standard Taxi Fuel: | 500 kg |

## 17.3 LMC Restrictions

| | |
|---|---|
| Maximum Computer load sheet LMC: | +/- 2500 kg |
| Maximum Manual load sheet LMC: | +/- 2500 kg |

UNCONTROLLED DOCUMENT

UNCONTROLLED DOCUMENT



UNCONTROLLED DOCUMENT (16 OCTOBER 2024 16:17:08)

# 18. Maximum Package Dimensions

## 18.1 Main Cargo Door

Weight and Balance Manual Supplement

| LENGTH (m) | WIDTH (m) | | | | | | | | | | | | | | | | | | | | | | | |
|---|---|---|---|---|---|---|---|---|---|---|---|---|---|---|---|---|---|---|---|---|---|---|---|---|
| | 0.15 | 0.30 | 0.46 | 0.61 | 0.76 | 0.91 | 1.07 | 1.22 | 1.37 | 1.52 | 1.68 | 1.83 | 1.98 | 2.13 | 2.29 | 2.44 | 2.59 | 2.74 | 2.90 | 3.05 | 3.20 | 3.35 | |
| 0.15 | 29.64 | 24.45 | 20.30 | 17.37 | 15.19 | 13.50 | 12.15 | 11.06 | 10.15 | 9.38 | 8.73 | 8.16 | 7.67 | 7.24 | 6.86 | 6.52 | 6.21 | 5.94 | 4.78 | 4.78 | 4.78 | 4.78 | STRAIGHT LOADING |
| 0.30 | 29.64 | 24.45 | 20.30 | 17.37 | 15.19 | 13.50 | 12.15 | 11.06 | 10.15 | 9.38 | 8.73 | 8.16 | 7.67 | 7.24 | 6.86 | 6.52 | 6.21 | 5.94 | 4.78 | 4.78 | 4.78 | 4.78 | | |
| 0.46 | 29.64 | 24.45 | 20.30 | 17.37 | 15.19 | 13.50 | 12.15 | 11.06 | 10.15 | 9.38 | 8.73 | 8.16 | 7.67 | 7.24 | 6.86 | 6.52 | 6.21 | 5.94 | 4.78 | 4.78 | 4.78 | 4.78 | | |
| 0.61 | 29.64 | 24.45 | 20.30 | 17.37 | 15.19 | 13.50 | 12.15 | 11.06 | 10.15 | 9.38 | 8.73 | 8.16 | 7.67 | 7.24 | 6.86 | 6.52 | 6.21 | 5.94 | 4.78 | 4.78 | 4.78 | 4.78 | | |
| 0.76 | 29.64 | 24.45 | 20.30 | 17.37 | 15.19 | 13.50 | 12.15 | 11.06 | 10.15 | 9.38 | 8.73 | 8.16 | 7.67 | 7.24 | 6.86 | 6.52 | 6.21 | 5.94 | 4.78 | 4.78 | 4.78 | 4.78 | | |
| 0.91 | 29.64 | 24.45 | 20.30 | 17.37 | 15.19 | 13.50 | 12.15 | 11.06 | 10.15 | 9.38 | 8.73 | 8.16 | 7.67 | 7.24 | 6.86 | 6.52 | 6.21 | 5.94 | 4.78 | 4.78 | 4.78 | 4.78 | | |
| 1.07 | 29.64 | 24.45 | 20.30 | 17.37 | 15.19 | 13.50 | 12.15 | 11.06 | 10.15 | 9.38 | 8.73 | 8.16 | 7.67 | 7.24 | 6.86 | 6.52 | 6.21 | 5.94 | 4.78 | 4.78 | 4.78 | 4.78 | | |
| 1.22 | 28.82 | 23.19 | 19.41 | 16.70 | 14.67 | 13.08 | 11.81 | 10.77 | 9.91 | 9.17 | 8.55 | 8.00 | 7.53 | 7.11 | 6.74 | 6.42 | 6.12 | 5.86 | 4.70 | 4.70 | 4.70 | 4.70 | | |
| 1.37 | 25.36 | 20.86 | 17.73 | 15.43 | 13.66 | 12.27 | 11.14 | 10.20 | 9.42 | 8.75 | 8.18 | 7.68 | 7.24 | 6.85 | 6.51 | 6.21 | 5.94 | 4.55 | 4.55 | 4.55 | 4.55 | 4.55 | | |
| 1.52 | 21.95 | 18.47 | 15.95 | 14.04 | 12.55 | 11.36 | 10.37 | 9.55 | 8.86 | 8.26 | 7.74 | 7.29 | 6.90 | 6.55 | 6.23 | 5.95 | 5.71 | 4.36 | 4.36 | 4.36 | 4.36 | 4.36 | | |
| 1.68 | 19.02 | 16.32 | 14.30 | 12.73 | 11.48 | 10.46 | 9.61 | 8.90 | 8.29 | 7.76 | 7.30 | 6.89 | 6.54 | 6.22 | 5.94 | 5.68 | 5.46 | 4.14 | 4.14 | 4.14 | 4.14 | 4.14 | | |
| 1.83 | 16.38 | 14.30 | 12.71 | 11.44 | 10.40 | 9.55 | 8.83 | 8.21 | 7.68 | 7.22 | 6.82 | 6.46 | 6.14 | 5.86 | 5.60 | 5.38 | 3.89 | 3.89 | 3.89 | 3.89 | 3.89 | 3.89 | | |
| 1.98 | 13.96 | 12.40 | 11.16 | 10.15 | 9.32 | 8.61 | 8.01 | 7.49 | 7.04 | 6.64 | 6.29 | 5.98 | 5.70 | 5.45 | 5.23 | 5.03 | 3.58 | 3.58 | 3.58 | 3.58 | 3.58 | 3.58 | | |
| 2.13 | 11.98 | 10.79 | 9.81 | 9.01 | 8.33 | 7.74 | 7.24 | 6.80 | 6.42 | 6.08 | 5.77 | 5.50 | 5.26 | 5.04 | 4.85 | 3.25 | 3.25 | 3.25 | 3.25 | 3.25 | 3.25 | 3.25 | | |
| 2.29 | 9.87 | 9.02 | 8.30 | 7.69 | 7.17 | 6.71 | 6.31 | 5.96 | 5.65 | 5.37 | 5.12 | 4.89 | 4.68 | 4.50 | 2.78 | 2.78 | 2.78 | 2.78 | 2.78 | 2.78 | 2.78 | 2.78 | | |
| 2.44 | 8.32 | 7.67 | 7.12 | 6.64 | 6.23 | 5.86 | 5.53 | 5.24 | 4.98 | 4.74 | 4.53 | 4.33 | 2.31 | 2.31 | 2.31 | 2.31 | 2.31 | 2.31 | 2.31 | 2.31 | 2.31 | 2.31 | | |
| | SWIVELING/DIAGONAL LOADING | | | | | | | | | | | | | | | | | | | | | | | |

UNCONTROLLED DOCUMENT

UNCONTROLLED DOCUMENT



UNCONTROLLED DOCUMENT (16 OCTOBER 2024 16:17:08)