UNCONTROLLED DOCUMENT

UNCONTROLLED DOCUMENT

SRN S340A
Sprint Air SAAB 340A

Revision: 2
Date: 08 October 2024

1 Sprint Air SAAB 340A Registrations

2 Aircraft Dimensions

3 Aircraft Servicing Points and Specifications

4 Ground Support Equipment

5 Chocking

6 Standard Turnaround Times

7 Safety Areas

8 Strong Wind Conditions

9 Aircraft Door Dimensions

10 Compartment Classification and Air-Conditioning

11 Aircraft Cabin Contour Dimensions

12 Maximum Position Weights

13 Loading and Un-Loading

14 Rigid, Oversized and Special Loads

15 Restricted Commodities Loading

16 Messaging and Reporting

17 Load Control Data

18 Maximum Package Dimensions

UNCONTROLLED DOCUMENT (08 OCTOBER 2024 16:18:43)

Page	Date	Comment
2	08 October 2024	ICAO Designator updated to correct code. *(Minor)*

UNCONTROLLED DOCUMENT

UNCONTROLLED DOCUMENT

UNCONTROLLED DOCUMENT

1. Sprint Air SAAB 340A Registrations

IATA Designator: -

ICAO Designator: **SRN**

Valid for: **SPKPO, SPKPN, SPKPV, SPKPH, SPKPK, SPKPU, SPKPZ, SPKPC, SPKPR.**

Note: Aircraft contained within this entry have been converted by different companies and may have different characteristics. Where differences occur, the applicable aircraft registrations will be displayed at the top of the sub-chaper header.

UNCONTROLLED DOCUMENT

UNCONTROLLED DOCUMENT

UNCONTROLLED DOCUMENT (08 OCTOBER 2024 16:18:43)

UNCONTROLLED DOCUMENT

2. Aircraft Dimensions

All dimensions in meters.

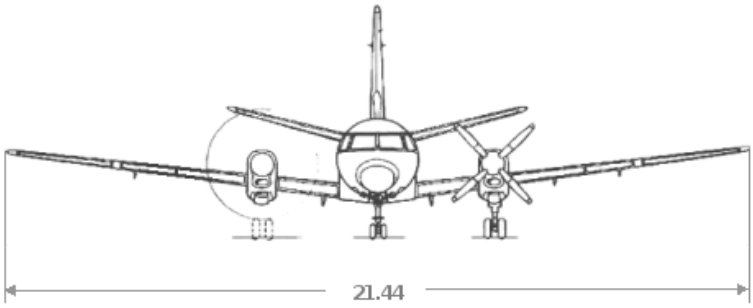

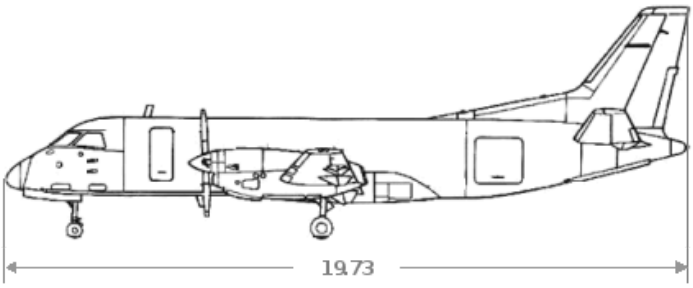

UNCONTROLLED DOCUMENT

UNCONTROLLED DOCUMENT

UNCONTROLLED DOCUMENT (08 OCTOBER 2024 16:18:43)

UNCONTROLLED DOCUMENT

3. Aircraft Servicing Points and Specifications

3.1 Servicing Points

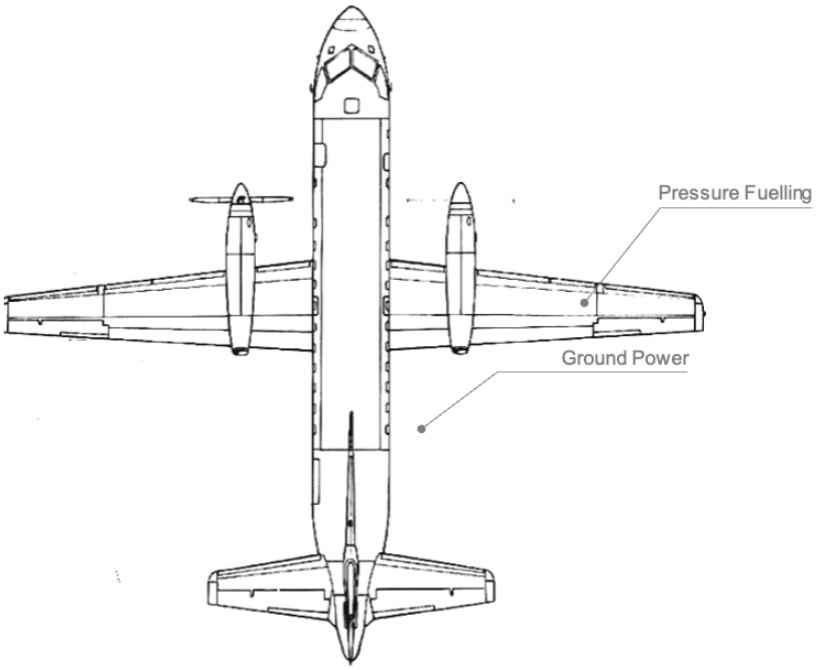

3.2 Servicing Specifications

System	Requirements	Notes
Ground Power Unit	28V DC	
Fuel	Jet A1	

UNCONTROLLED DOCUMENT

UNCONTROLLED DOCUMENT

UNCONTROLLED DOCUMENT (08 OCTOBER 2024 16:18:43)

UNCONTROLLED DOCUMENT

4. Ground Support Equipment

4.1 Positioning of GSE

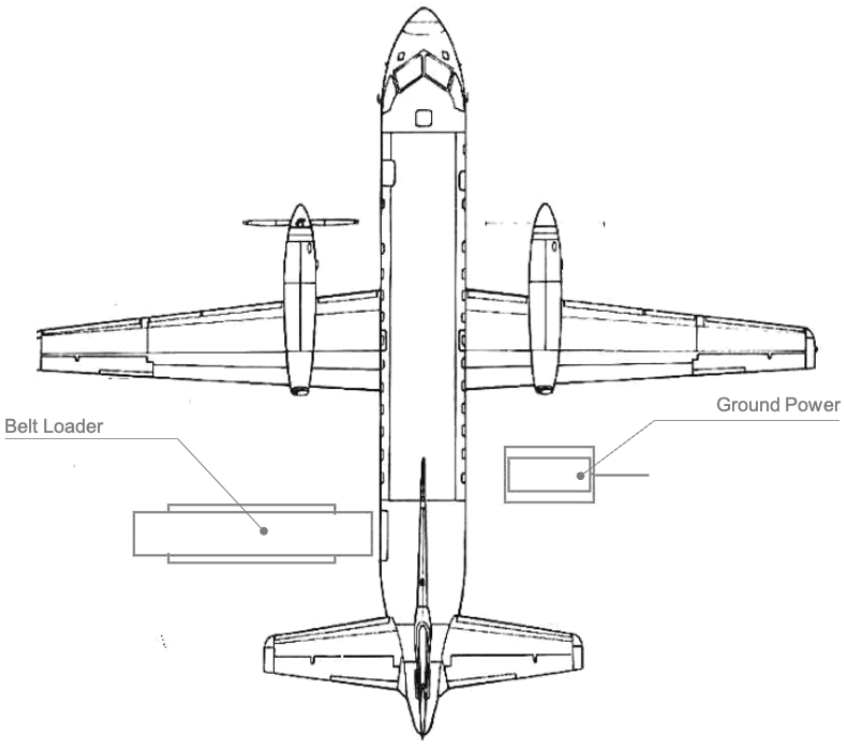

4.2 GSE Requirements

GSE	Type	Quantity
Belt Loader	Standard	1
GPU	28 V DC	1
Tractor	Standard	1
Belly Container / Wagon	N/A	According to load

UNCONTROLLED DOCUMENT

UNCONTROLLED DOCUMENT

UNCONTROLLED DOCUMENT (08 OCTOBER 2024 16:18:43)

UNCONTROLLED DOCUMENT

5. Chocking

As per standard chocking procedures.

UNCONTROLLED DOCUMENT

UNCONTROLLED DOCUMENT

UNCONTROLLED DOCUMENT (08 OCTOBER 2024 16:18:43)

UNCONTROLLED DOCUMENT

6. Standard Turnover Times

Turn-around time: 01:00 hours (full off- and on-load)

UNCONTROLLED DOCUMENT

UNCONTROLLED DOCUMENT

UNCONTROLLED DOCUMENT (08 OCTOBER 2024 16:18:43)

UNCONTROLLED DOCUMENT

6. Safety Areas

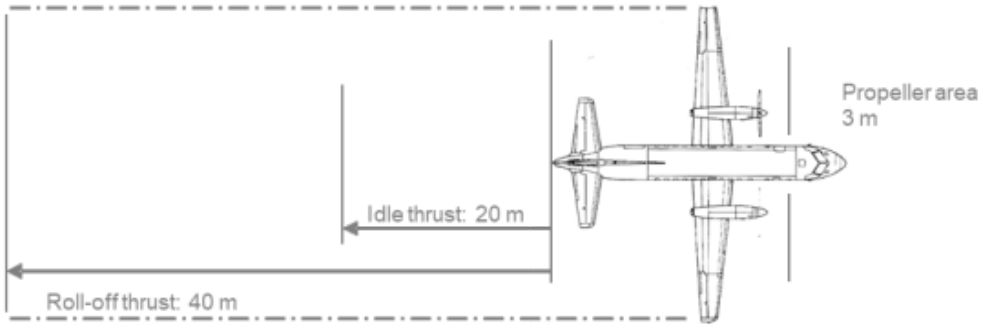

UNCONTROLLED DOCUMENT

UNCONTROLLED DOCUMENT

UNCONTROLLED DOCUMENT (08 OCTOBER 2024 16:18:43)

UNCONTROLLED DOCUMENT

8. Strong Wind Conditions

All doors can be opened and left open, in wind speeds up to and including the operating limits of the aircraft.

UNCONTROLLED DOCUMENT

UNCONTROLLED DOCUMENT

UNCONTROLLED DOCUMENT (08 OCTOBER 2024 16:18:43)

9. Aircraft Door Dimensions

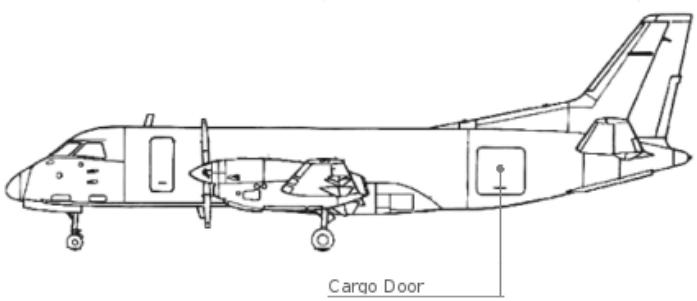

Door width, height, and sill height are defined as follows.

(This drawing is for illustration purposes only and may not be an exact representation of this aircraft type)

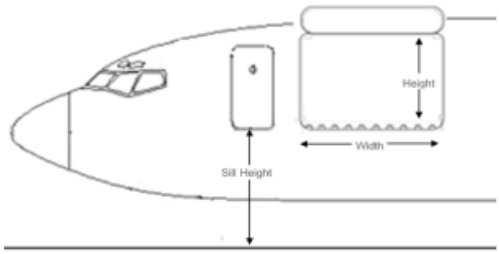

All dimensions are in centimetres (cm).

Door	Door Width	Door Height	Average Door Sill Height
Cargo Door	135	130	168

UNCONTROLLED DOCUMENT
UNCONTROLLED DOCUMENT

UNCONTROLLED DOCUMENT (08 OCTOBER 2024 16:18:43)

UNCONTROLLED DOCUMENT

10. Compartment Classification and Air-Conditioning

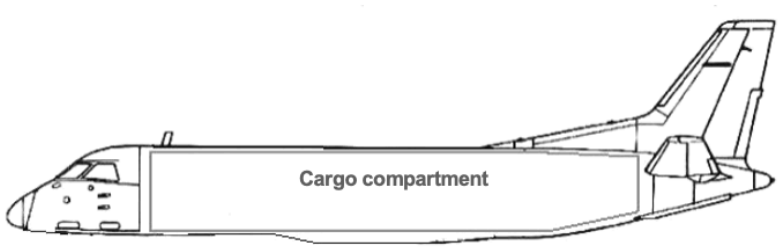

10.1 Compartment Classification

Compartment	Features
Cabin	- Classification **E**
	- Pressurisation
	- Smoke Detection
	- **Accessible** during flight

10.2 Air-Conditioning

	Cabin
Temperature	18 C to 29 C
Heating	Yes
Heat adjust	Yes
Cooling	Yes
Ventilation	Yes

UNCONTROLLED DOCUMENT

UNCONTROLLED DOCUMENT

UNCONTROLLED DOCUMENT (08 OCTOBER 2024 16:18:43)

UNCONTROLLED DOCUMENT

11. Aircraft Cabin Contour Dimensions

11.1 Aircraft Layouts

Valid for registrations: **SPKPH, SPKPK, SPKPU, SPKPZ**



Valid for registrations: **SPKPO, SPKPV**



Valid for registrations: **SPKPN**

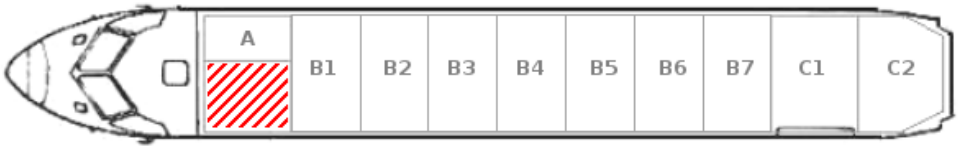

11.1.1 Cargo Compartment Dimensions

	Length (cm)	Max. Width (cm)	Floor Width (cm)	Height (cm)	Volume (m3)
Cabin	1104	215	166	175	35.8

UNCONTROLLED DOCUMENT

UNCONTROLLED DOCUMENT (08 OCTOBER 2024 16:18:43)

12. Maximum Position Weights

12.1 Maximum Main-deck Compartment Weights in Kilograms

Valid for registrations: **SPKPH, SPKPK, SPKPU, SPKPZ**

Position	Max. Weight (Kg)	Max. Floor Load (Kg/m2)
A (Tech. comp.)	325	485
B1	900	485 **without** wooden spreaders installed across tracks
B2	900	
B3	900	730 **with** wooden spreaders installed across tracks
B4	900	
C1	715	730
C2	270	

Valid for registrations: **SPKPO, SPKPV**

Position	Max. Weight (Kg)	Max. Floor Load (Kg/m2)
B1	500	
B2	500	485 **without** wooden spreaders installed across tracks
B3	500	
B4	500	730 **with** wooden spreaders installed across tracks
B5	500	
B6	500	
B7	500	
C1	715	730
C2	270	

Valid for registrations: **SPKPN**

Position	Max. Weight (Kg)	Max. Floor Load (Kg/m2)
A	270	485
B1	500	
B2	500	485 **without** wooden spreaders installed across tracks
B3	500	
B4	500	730 **with** wooden spreaders installed across tracks
B5	500	
B6	500	
B7	500	
C1	715	730
C2	270	

12.2 Maximum Cabin Load

3850 Kg

UNCONTROLLED DOCUMENT
UNCONTROLLED DOCUMENT

UNCONTROLLED DOCUMENT (08 OCTOBER 2024 16:18:43)

13. Loading and Un-loading

Risk of Tail-tipping

13.1 Un-Loading Sequence

Observe the following rules to prevent tail-tipping

Unload the cargo in the following numbered sequence and respect standard step un-loading method:

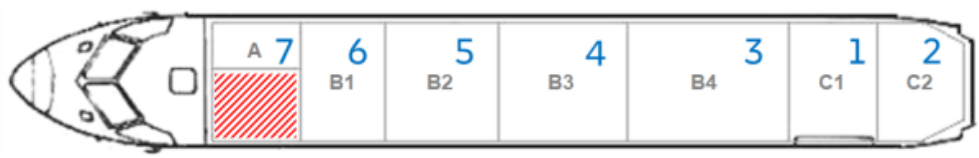

13.2 Loading Sequence

Observe the following rules to prevent tail-tipping

Load the cargo in the following numbered sequence and respect standard step un-loading method:



13.3 Loading Notes

13.3.1 Fork Lift Usage

Usage of fork-lift is allowed for this aircraft type. A guide-man must be utilised at all times, paying particular attention to maintaining a safe distance between fork-lift and horizontal stabiliser, wing trailing edge and fuselage.

13.3.2 Securing of Freight inside Cabin

Freight is secured inside the cabin by a combination of straps (for heavy loads) and spider nets, separating the cabin sections. All spider nets must be properly secured.

13.3.3 Loading through Forward Door

Loading through the Forward Door is not recommended, but is allowed for small packages.

UNCONTROLLED DOCUMENT
UNCONTROLLED DOCUMENT

UNCONTROLLED DOCUMENT (08 OCTOBER 2024 16:18:43)

UNCONTROLLED DOCUMENT

14. Rigid, Oversized and Special Loads

14.1 Live Animals

14.1.1 Horses

Horses **not permitted** for loading on this aircraft type.

14.1.2 Other Live Animals

The following table provides a list of commonly transported animals. If there is a requirement to transport animals not listed below, contact the operator for more information.

	Cabin
Day-old chickens	Yes
Dogs or Cats	
Small Mammals or Birds	
Tropical Fish	
Reptiles or Amphibians	
Eels	
Crustaceans or Molluscs	
Insects	
Hatching eggs	

UNCONTROLLED DOCUMENT

UNCONTROLLED DOCUMENT

UNCONTROLLED DOCUMENT (08 OCTOBER 2024 16:18:43)

15. Restricted Commodities Loading

15.1 Radioactive (RRY), Magnetised (MAG) and Cargo Aircraft Only (CAO)

The following Dangerous Good type loading restrictions apply. The Dangerous Good type can be loaded on positions marked with a 'Y'. The Dangerous Good type cannot be loaded on positions marked with a 'N'.

	Position						
DG Type	A	B1	B2	B3	B4	C1***	C2***
MAG	N	N	N	Y	N	N	N
CAO*	N	Y	N	N	N	N	N
RRY (Class 7)**	N	N	N	N	N	N	N

Notes:

- *CAO packages must be properly secured and loaded visible and accessible to crew during flight.
- **Excepted Quantities of Radioactive Material (RRE) are prohibited
- ***Dangerous goods shall not be loaded in positions C1 & C2.

15.2 Dry Ice

Please see the Global Supplementary Operational Document **Dry Ice Consolidation table** for the current maximum allowed Dry Ice limits.

15.3 Dry Ice (ICE) and Live Animals (AVI)

When transporting animals, they are placed in the first cargo compartment. In addition, dry ice is placed in the aft cargo compartment, below the animal cage level.

15.4 Additional Restrictions

The following Dangerous Goods types are prohibited on Sprint Air aircraft:

- Explosives, except divisions 1.3 and 1.4 and if not used for military purposes.
- Division 2.3 (RPG).
- Division 6.1 Packing Group I

UNCONTROLLED DOCUMENT
UNCONTROLLED DOCUMENT

UNCONTROLLED DOCUMENT

16. Messaging and Reporting

16.1 Messaging

Standard messaging rules apply.

16.2 Reporting

Standard messaging rules apply.

UNCONTROLLED DOCUMENT

UNCONTROLLED DOCUMENT

UNCONTROLLED DOCUMENT (08 OCTOBER 2024 16:18:43)

UNCONTROLLED DOCUMENT

17. Load Control Data

17.1 Standard Mass Additions

17.1.1 Additional Crew Members (ACM)

Maximum Number of ACMs:	1
Mass of ACM:	85 kg

17.1.2 Fly Away Kit (FAK) and Ballast

Fly Away Kit (FAK):	107 Kg in C2 on SPKPK (not included in DOW/DOI) 16 Kg in C2 on SPKPH (not included in DOW/DOI)

17.2 Minimum Fuel and Standard Taxi Fuel

Minimum Fuel:	500 kg
Standard Taxi Fuel:	40 kg

17.3 LMC Restrictions

Fuel:	Not allowed
Payload:	Not allowed

UNCONTROLLED DOCUMENT

UNCONTROLLED DOCUMENT

UNCONTROLLED DOCUMENT (08 OCTOBER 2024 16:18:43)

UNCONTROLLED DOCUMENT

18. Maximum Package Dimensions

MAX Tube Dimensions: 6.5m long and 35cm diameter

Pallets: 120x80x100 (17 Pallets)

Compartment B, C1 and C2 (tables in inches)

A six inch high spacer must be used under the front end of the package to allow for the difference in floor levels (Ref. WBM 01–60–10). The package has to be restrained by a net and tied down at the front end.

HEIGHT (In)	WIDTH (In) 10	15	20	25	30	35	40	45
	LENGTH (In)							
50	99	99	93	90	86	74	52	–
40	99	99	93	90	86	78	54	54
30	99	99	93	90	86	78	54	54
20	105	105	102	102	102	102	95	81
10	105	105	102	102	102	102	95	81

4. Compartment C1 (tables in inches)

HEIGHT (In)	WIDTH (In) 10	15	20	25	30	35	40	45
	LENGTH (In)							
50	61	61	61	61	58	58	55	–
40	61	61	61	61	58	58	55	55
30	61	61	61	61	58	58	55	55
20	62	62	62	62	61	61	60	60
10	62	62	62	62	61	61	60	60

5. Compartment C2 (tables in inches)

HEIGHT (In)	WIDTH (In) 10	15	20	25	30	35	40	45
	LENGTH (In)							
50	61	61	57	54	48	47	45	–
40	61	61	57	54	48	47	45	–
30	61	61	57	54	48	47	45	–
20	66	63	60	59	54	52	46	–
10	66	63	60	59	54	52	46	–

UNCONTROLLED DOCUMENT

UNCONTROLLED DOCUMENT (08 OCTOBER 2024 16:18:43)