UNCONTROLLED DOCUMENT

SWT/MDF EMB120
Swiftair-Hellas Embraer 120 Brasilia

Revision: 1
Date: 24 May 2024

1 SwiftAir Hellas Embraer 120 Brasilia Registrations
2 Aircraft Dimensions
3 Aircraft Servicing Points and Specifications
4 Ground Support Equipment
5 Standard Turnaround Times
6 Safety Areas
7 Strong Wind Conditions
8 Aircraft Door Dimensions
9 Compartment Classification and Air-Conditioning
10 Cone positioning
11 Aircraft Cabin Contour Dimensions
12 Maximum Position Weights
13 Loading and Un-Loading
14 Rigid, Oversized and Special Loads
15 Restricted Commodities Loading
16 Messaging and Reporting
17 Load Control Data
18 Maximum Package Dimensions

UNCONTROLLED DOCUMENT

Page	Date	Comment
2	24 May 2024	Registration SXAQE added.

UNCONTROLLED DOCUMENT
UNCONTROLLED DOCUMENT

1. SwiftAir Hellas Embraer 120 Brasilia Registrations

IATA Designator:	-
ICAO Designator:	SWT/MDF
Valid for:	**ECGQA, ECHAK, ECHCF, ECHMY, ECHTS, ECIMX, ECJBE, ECJKH, SXAQI, SXAQK, SXAQM, SXAQE**

UNCONTROLLED DOCUMENT
UNCONTROLLED DOCUMENT

2. Aircraft Dimensions

All dimensions in meters.

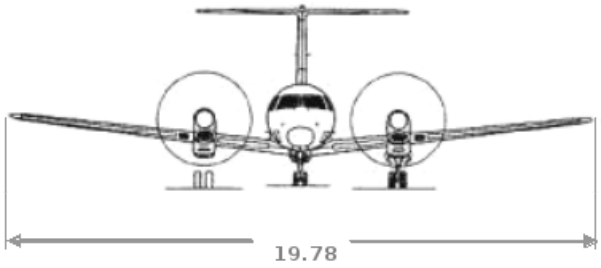

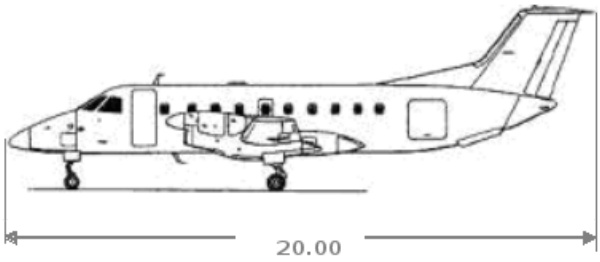

UNCONTROLLED DOCUMENT
UNCONTROLLED DOCUMENT

UNCONTROLLED DOCUMENT (24 MAY 2024 12:12:13)

UNCONTROLLED DOCUMENT

3. Aircraft Servicing Points and Specifications

3.1 Servicing Points

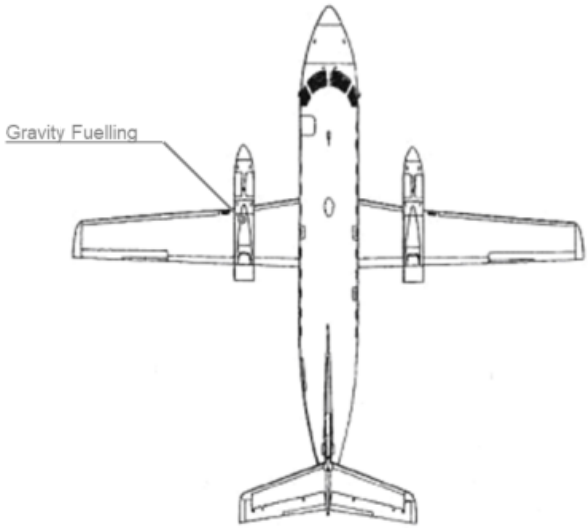

3.2 Servicing Specifications

System	Requirements	Notes
Ground Power Unit	28V DC	
Fuel	Jet A1	

UNCONTROLLED DOCUMENT

UNCONTROLLED DOCUMENT (24 MAY 2024 12:12:13)

UNCONTROLLED DOCUMENT

4. Ground Support Equipment

4.1 Positioning of GSE

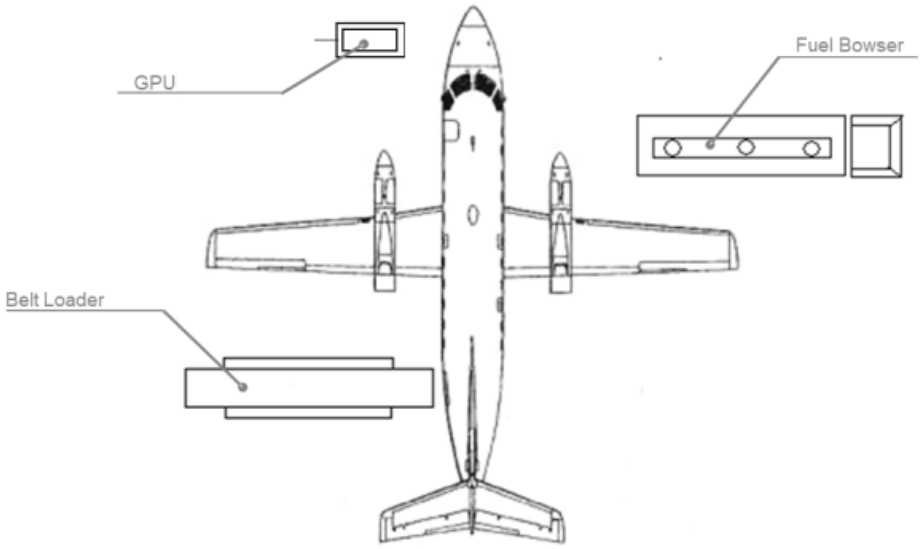

4.2 GSE Requirements

GSE	Type	Quantity
Belt Loader	Standard (7.5m)	1
Tractor	Standard	1
Baggage Cart	Standard	According to load

UNCONTROLLED DOCUMENT

UNCONTROLLED DOCUMENT (24 MAY 2024 12:12:13)

5. Standard Turnover Times

Turn-around time: 00:30 hour (full off- and on-load)

UNCONTROLLED DOCUMENT
UNCONTROLLED DOCUMENT

UNCONTROLLED DOCUMENT (24 MAY 2024 12:12:13)

6. Safety Areas

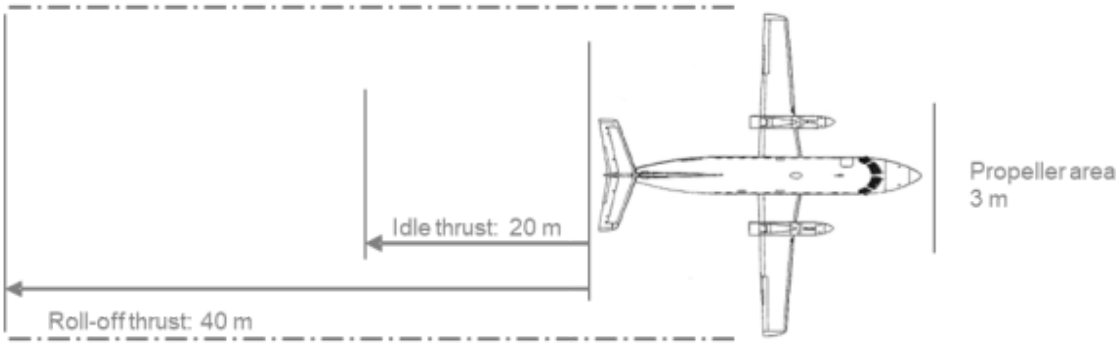

UNCONTROLLED DOCUMENT
UNCONTROLLED DOCUMENT

UNCONTROLLED DOCUMENT (24 MAY 2024 12:12:13)

7. Strong Wind Conditions

All doors can be opened in any wind speeds allowing for flight operations.

UNCONTROLLED DOCUMENT
UNCONTROLLED DOCUMENT

UNCONTROLLED DOCUMENT (24 MAY 2024 12:12:13)

UNCONTROLLED DOCUMENT

8. Aircraft Door Dimensions

Door width, height, and sill height are defined as follows.

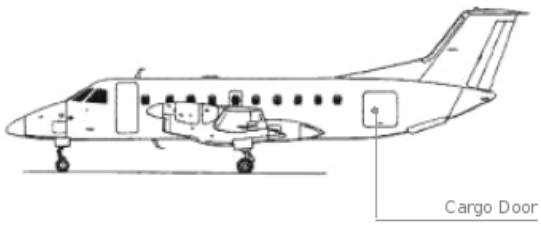

Door width, height, and sill height are defined as follows.

(This drawing is for illustration purposes only and may not be an exact representation of this aircraft type)

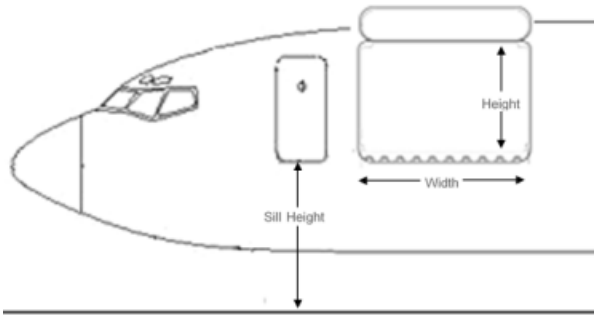

All dimensions are in centimetres (cm).

Door	Door Width	Door Height	Min. Door Sill Height	Max. Door Sill Height
Cargo Door	130	137	66	70

UNCONTROLLED DOCUMENT

UNCONTROLLED DOCUMENT (24 MAY 2024 12:12:13)

9. Compartment Classification and Air-Conditioning

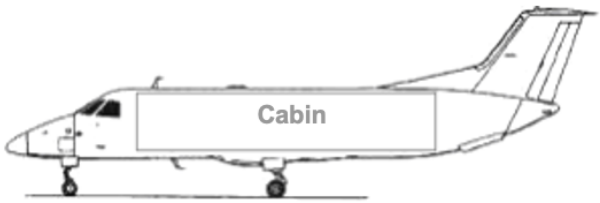

9.1 Compartment Classification

Compartment	Features
Cabin	- Classification E
	- Pressurised
	- **Accessible** during flight

9.2 Air-Conditioning

	Cabin
Temperature	15.5ºC to 32.2ºC
Heating	Yes
Heat adjust	Yes
Cooling	Yes
Ventilation	Yes

UNCONTROLLED DOCUMENT
UNCONTROLLED DOCUMENT

UNCONTROLLED DOCUMENT (24 MAY 2024 12:12:13)

10. Cone Positioning

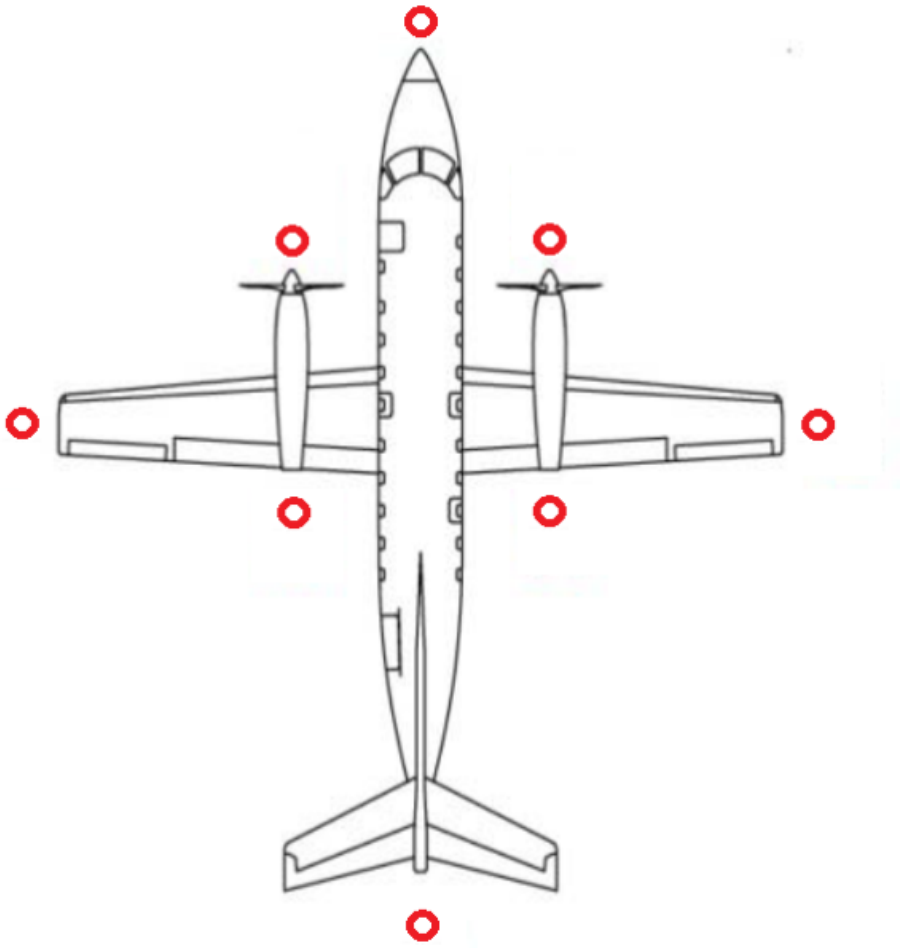

Cones shall be placed a maximum of 1m from the aircraft in the positions indicated in the diagram above.

UNCONTROLLED DOCUMENT
UNCONTROLLED DOCUMENT

11. Aircraft Cabin Contour Dimensions

11.1 Aircraft Contour Compartments

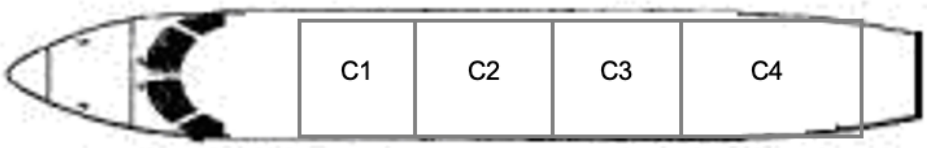

11.1.1 Cargo Compartment Dimensions

Not currently available.

UNCONTROLLED DOCUMENT
UNCONTROLLED DOCUMENT

UNCONTROLLED DOCUMENT (24 MAY 2024 12:12:13)

12. Maximum Position Weights

12.1 Maximum Main-deck Compartment Weights in Kilograms

Compartment	Max. Weight (kg)	Max. Floor load (kg/m2)	Floor area (m2)	Volume (m3)
C1	1180	488	3.07	6.57
C2	1180		3.75	8.04
C3	1180		3.37	7.22
C4	550		5.57	11.07

12.2 Maximum Cabin Load

4090 kg

UNCONTROLLED DOCUMENT
UNCONTROLLED DOCUMENT

UNCONTROLLED DOCUMENT (24 MAY 2024 12:12:13)

13. Loading and Un-loading

Severe risk of Tail-tipping

13.1 Un-Loading Sequence

Un-load the Cabin in the following numbered sequence, and respect the standard step un-loading method:

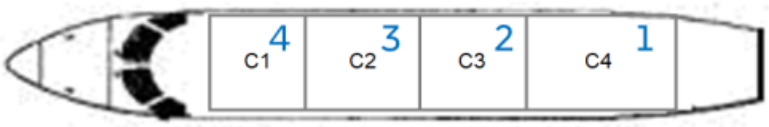

Note: No more than 1 person allowed at the same time behind the door

13.2 Loading Sequence

Load the Cabin in the following numbered sequence, and respect the standard step un-loading method:

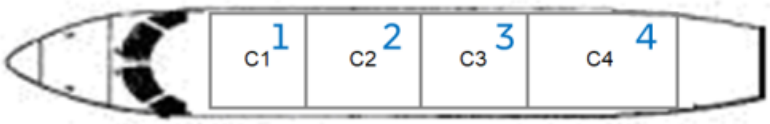

Note: No more than 1 person allowed at the same time behind the door

13.3 Loading Notes

13.3.1 Tail-stand

Tail-stand must be installed prior to any un-loading or loading operations.

UNCONTROLLED DOCUMENT
UNCONTROLLED DOCUMENT

UNCONTROLLED DOCUMENT (24 MAY 2024 12:12:13)

14. Rigid, Oversized and Special Loads

14.1 Aircraft Engines

This aircraft type does not support the carriage of aircraft engines.

14.2 Live Animals

14.2.1 Horses

This aircraft type does not support the carriage of horses.

14.2.2 Other Live Animals

The following table provides a list of commonly transported animals. If there is a requirement to transport animals not listed below, contact the operator for more information.

	Main Cabin
Day-old chickens	Yes
Dogs or Cats	
Small Mammals or Birds	
Tropical Fish	
Reptiles or Amphibians	
Eels	No
Crustaceans or Molluscs	
Insects	Yes
Hatching eggs	

UNCONTROLLED DOCUMENT
UNCONTROLLED DOCUMENT

UNCONTROLLED DOCUMENT (24 MAY 2024 12:12:13)

15. Restricted Commodities Loading

15.1 Radioactive (RRY), Magnetised (MAG) and Cargo Aircraft Only (CAO)

The following Dangerous Good type loading restrictions apply. The Dangerous Good type can be loaded on positions marked with a 'Y'. The Dangerous Good type cannot be loaded on positions marked with a 'N'.

	Position			
DG Type	C1	C2	C3	C4
MAG	N	Y1	Y1	N
RRY (Class 7) Max T.I. 30	N	N	N	Y

Y1: please consult with crew prior to loading.

Cargo Aicraft Only (CAO): CAO shipments must be loaded visibly and accessible to the crew during flight. If that is not possible due to aircraft configuration, no CAO shipments shall be loaded.

15.2 Dry Ice

Please see the Global Supplementary Operational Document **Dry Ice Consolidation table** for the current maximum allowed Dry Ice limits.

15.3 Dry Ice (ICE) and Live Animals (AVI)

Loading of ICE and AVI **is not allowed** in the same compartment.

15.4 Lithium Batteries

Please see the Global Supplementary Operational Document **Lithium Battery Loadability Consolidation Table** for the current UN3480 Section IA/IB (RBI), UN3090 Section IA/IB (RBM), UN3481 Section I (RLI), UN3091 Section I (RLM) load ability limits.

UNCONTROLLED DOCUMENT
UNCONTROLLED DOCUMENT

UNCONTROLLED DOCUMENT (24 MAY 2024 12:12:13)

16. Messaging and Reporting

16.1 Messaging

Standard messaging rules apply.

16.2 Reporting

Standard messaging rules apply.

UNCONTROLLED DOCUMENT
UNCONTROLLED DOCUMENT

UNCONTROLLED DOCUMENT (24 MAY 2024 12:12:13)

17. Load Control Data

17.1 Standard Mass Additions

17.1.1 Additional Crew Members (ACM)

Maximum Number of ACMs:	-
Mass of ACM:	85 kg

17.1.2 Fly Away Kit (FAK) and Ballast

Fly Away Kit (FAK):	-
Ballast:	-

17.2 Minimum Fuel and Standard Taxi Fuel

Minimum Fuel:	Not applicable
Standard Taxi Fuel:	50kg

17.3 LMC Restrictions

LMC at crew dicresion.

UNCONTROLLED DOCUMENT
UNCONTROLLED DOCUMENT

UNCONTROLLED DOCUMENT (24 MAY 2024 12:12:13)

18. Maximum Package Dimensions

The EMB-120 cargo model was designed and approved to carry bulk cargo such as mail bags, small packages or relatively soft containers made of cardboard, paperboard, foam fabrics or plastic. Items that do not comply with these criteria are not allowed inside the airplane.

Standard loading procedures concern all articles of freight or cargo that weight less than 34 kg (75 lbs) single unit weight. The physical dimension of any freight package is of no concern of its total weight is less than 34 kg (75 lbs).

UNCONTROLLED DOCUMENT
UNCONTROLLED DOCUMENT

UNCONTROLLED DOCUMENT (24 MAY 2024 12:12:13)