UNCONTROLLED DOCUMENT

UNCONTROLLED DOCUMENT

SWT ATR42
Swiftair ATR 42-300

Revision: 1
Date: 27 June 2024

1 SwiftAir ATR 42-300 Registrations

2 Aircraft Dimensions

3 Aircraft Servicing Points and Specifications

4 Ground Support Equipment

5 Chocking

6 Cone Positioning

7 Standard Turnaround Times

8 Safety Areas

9 Strong Wind Conditions

10 Aircraft Door Dimensions

11 Compartment Classification and Air-Conditioning

12 Aircraft Cabin Contour Dimensions

13 Maximum Position Weights

14 Loading and Un-Loading

15 Rigid, Oversized and Special Loads

16 Restricted Commodities Loading

17 Messaging and Reporting

18 Load Control Data

19 Maximum Package Dimensions

UNCONTROLLED DOCUMENT (27 JUNE 2024 15:54:45)

Page	Date	Comment
17	27 June 2024	Old GSAM references updated to the new AGOM reference links. *(Minor)*

UNCONTROLLED DOCUMENT
UNCONTROLLED DOCUMENT

UNCONTROLLED DOCUMENT

1. SwiftAir ATR 42-300 Registrations

IATA Designator:	W3
ICAO Designator:	SWT
Valid for:	**ECISX, ECIVP, ECJAD, ECJBN, ECJBX, ECKAI.**

UNCONTROLLED DOCUMENT

UNCONTROLLED DOCUMENT

UNCONTROLLED DOCUMENT (27 JUNE 2024 15:54:45)

UNCONTROLLED DOCUMENT

2. Aircraft Dimensions

All dimensions in meters.



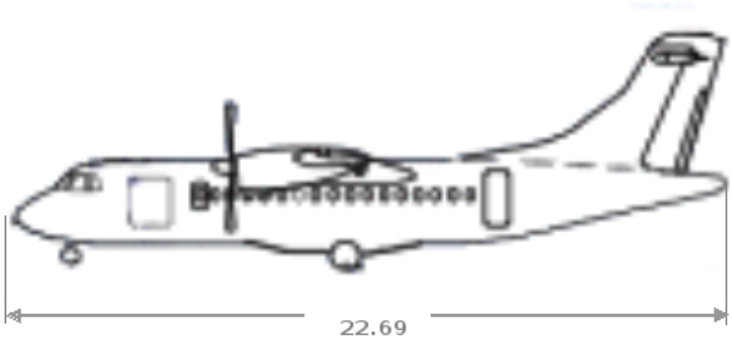

UNCONTROLLED DOCUMENT

UNCONTROLLED DOCUMENT

UNCONTROLLED DOCUMENT (27 JUNE 2024 15:54:45)

UNCONTROLLED DOCUMENT

3. Aircraft Servicing Points and Specifications

3.1 Servicing Points

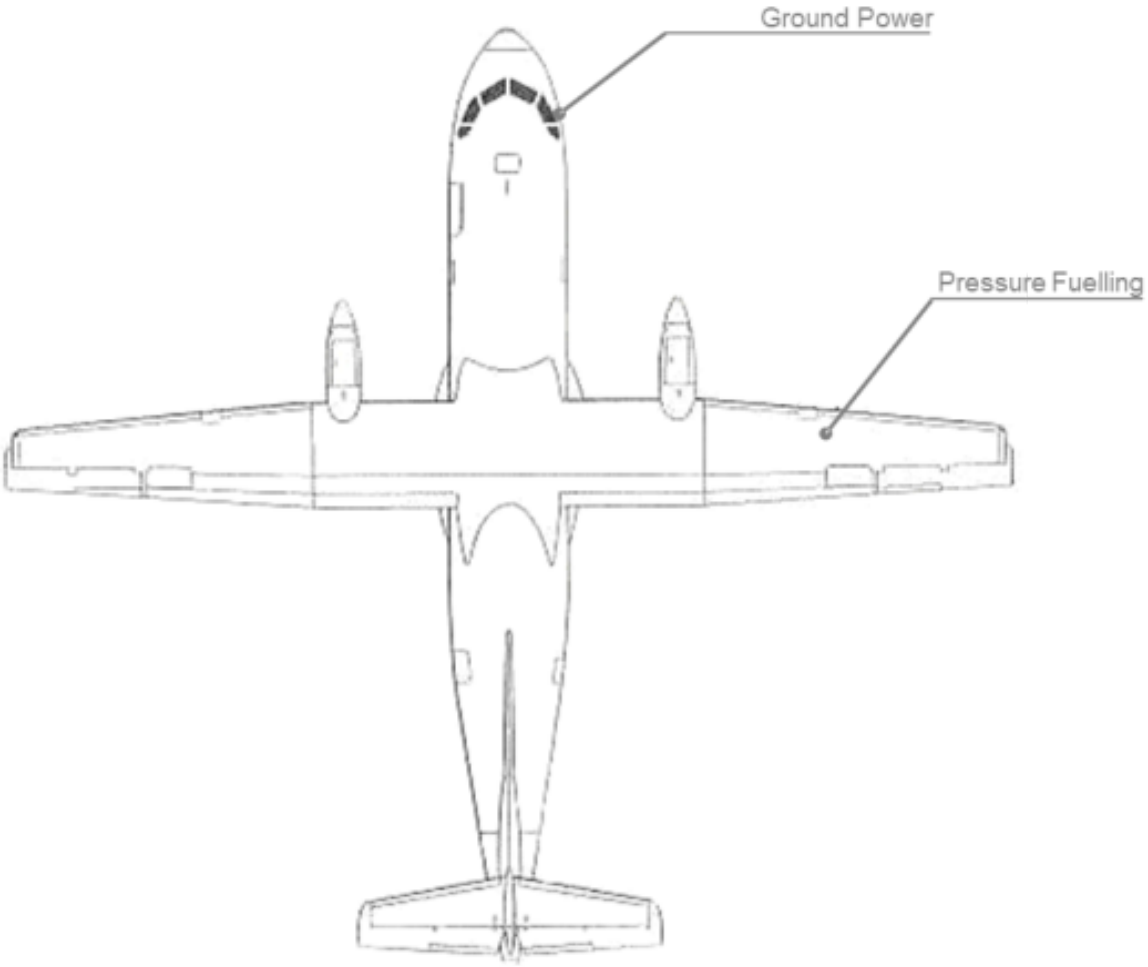

3.2 Servicing Specifications

System	Requirements	Notes
Ground Power Unit	28V DC	
Fuel	Jet A1	

UNCONTROLLED DOCUMENT

UNCONTROLLED DOCUMENT

UNCONTROLLED DOCUMENT (27 JUNE 2024 15:54:45)

UNCONTROLLED DOCUMENT

4. Ground Support Equipment

4.1 Positioning of GSE

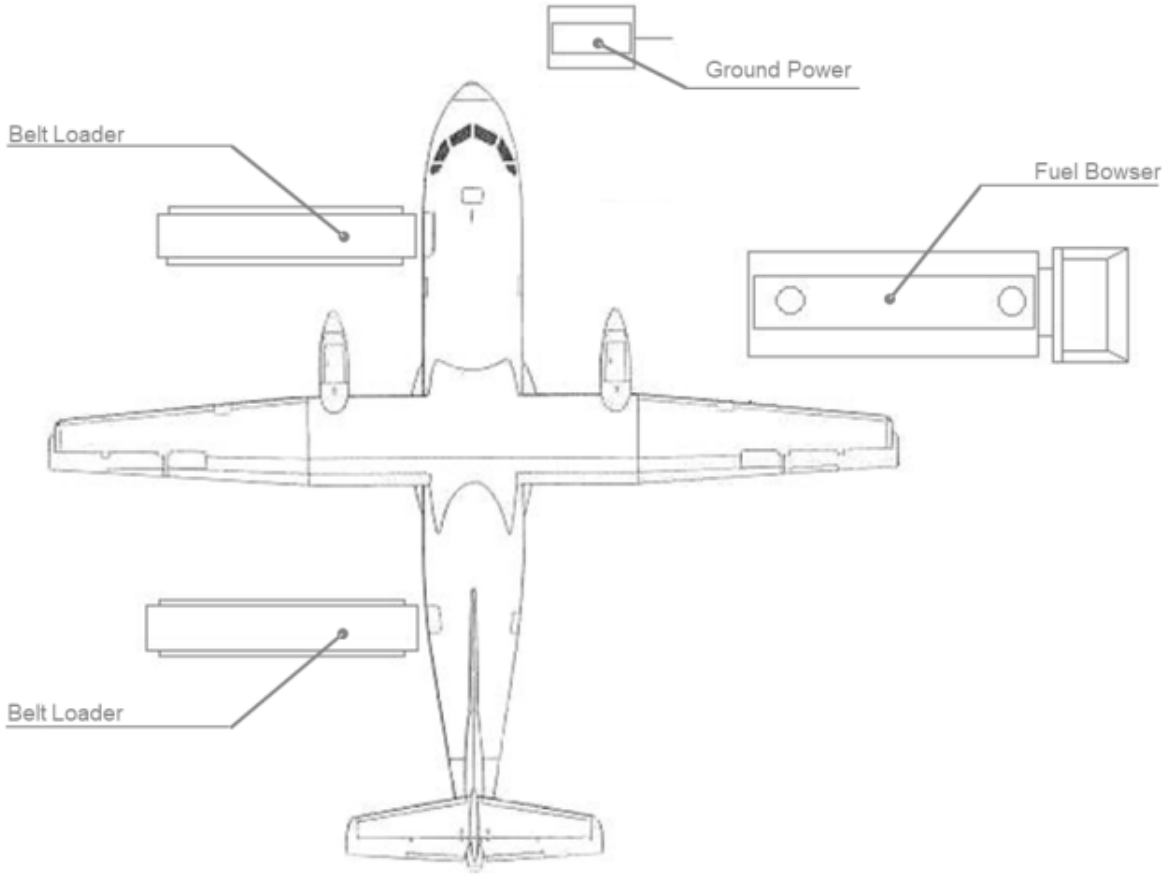

4.2 GSE Requirements

GSE	Type	Quantity
Belt Loader	Standard	1
Ground Power Unit	28 V DC	1
Tractor	Standard	1
Belly Container / Wagon	N/A	According to load

UNCONTROLLED DOCUMENT

UNCONTROLLED DOCUMENT

UNCONTROLLED DOCUMENT (27 JUNE 2024 15:54:45)

UNCONTROLLED DOCUMENT

5. Chocking

Nose-gear and left Main-gear shall be chocked.

UNCONTROLLED DOCUMENT

UNCONTROLLED DOCUMENT

UNCONTROLLED DOCUMENT (27 JUNE 2024 15:54:45)

UNCONTROLLED DOCUMENT

6. Cone Positioning

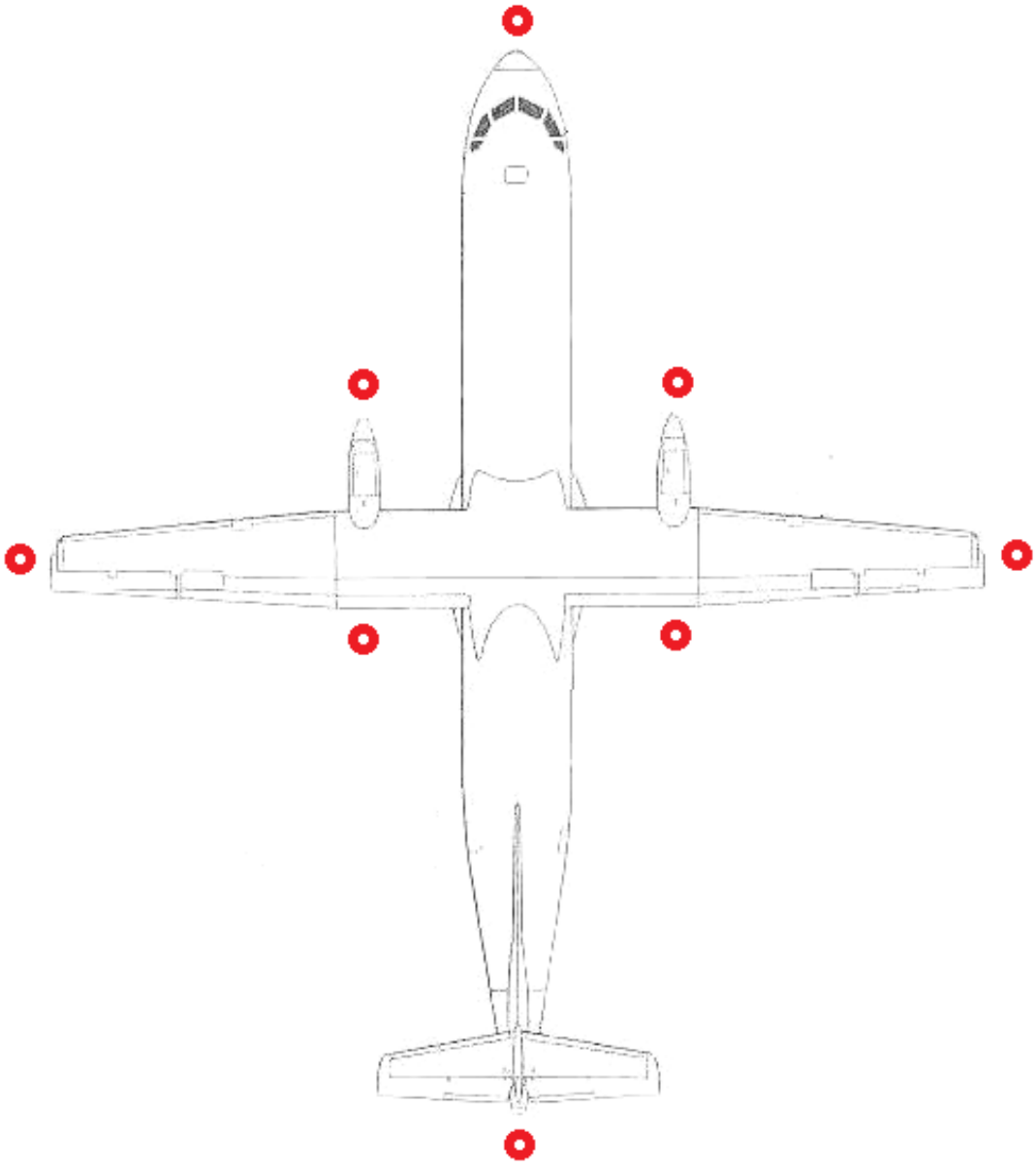

Cones shall be placed a maximum of 1m from the aircraft in the positions indicated in the diagram above.

UNCONTROLLED DOCUMENT

UNCONTROLLED DOCUMENT

UNCONTROLLED DOCUMENT (27 JUNE 2024 15:54:45)

UNCONTROLLED DOCUMENT

7. Standard Turnaround Times

Turn-around time for an end stop: 01:30 hour (full off- and on-load)

UNCONTROLLED DOCUMENT

UNCONTROLLED DOCUMENT

UNCONTROLLED DOCUMENT (27 JUNE 2024 15:54:45)

8. Safety Areas

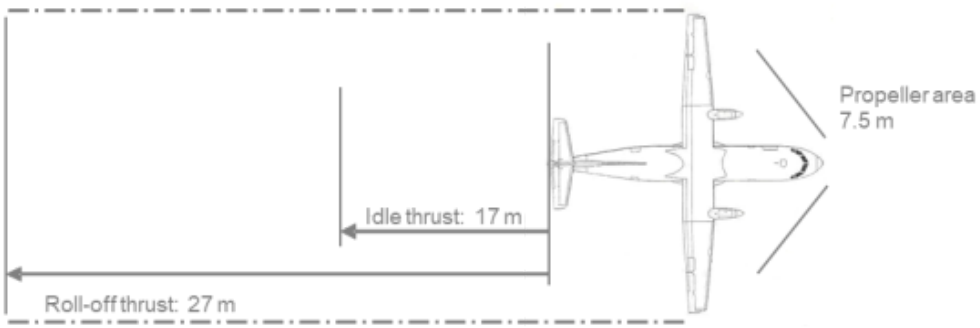

UNCONTROLLED DOCUMENT
UNCONTROLLED DOCUMENT

UNCONTROLLED DOCUMENT (27 JUNE 2024 15:54:45)

UNCONTROLLED DOCUMENT

9. Strong Wind Conditions

If the wind conditions on the ramp reach the following speeds, the corresponding actions shall be taken.

Wind Speed	Action
Up to 45 knots	Normal Operations: All doors can be opened and left open
More than 45 knots	Do not open cargo doors regardless of the angle of the wind relative to the aircraft.
More than 45 knots	All Doors to be closed immediately.

UNCONTROLLED DOCUMENT

UNCONTROLLED DOCUMENT

UNCONTROLLED DOCUMENT (27 JUNE 2024 15:54:45)

10. Aircraft Door Dimensions

Door width, height, and sill height are defined as follows.

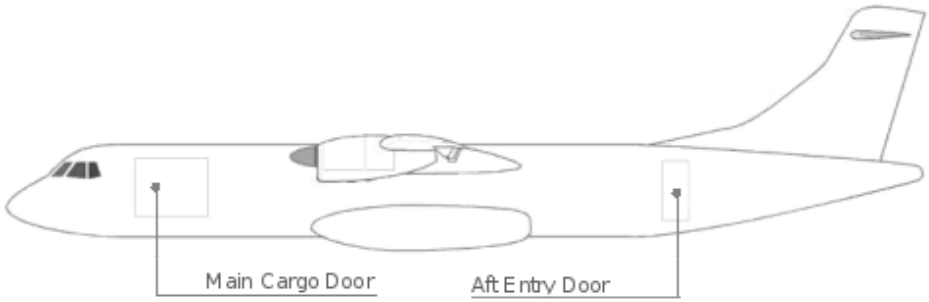

(This drawing is for illustration purposes only and may not be an exact representation of this aircraft type)

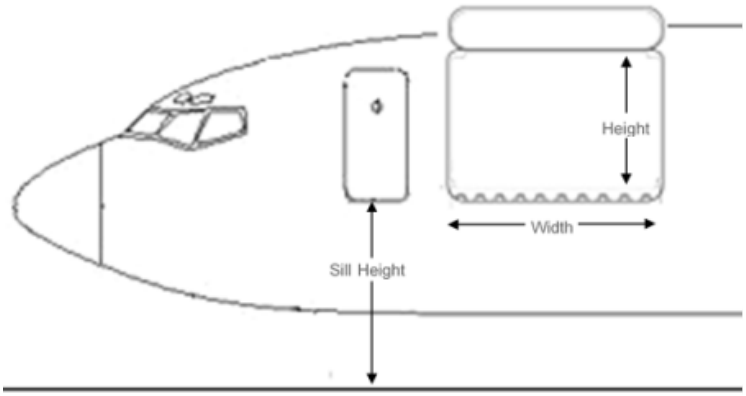

All dimensions are in centimetres (cm).

Door	Door Width	Door Height	Min. Door Sill Height	Max. Door Sill Height
Main Cargo Door	130	157	100	110
Aft Entry Door	64	173	100	110
Service Door	69	127	100	110

UNCONTROLLED DOCUMENT
UNCONTROLLED DOCUMENT

UNCONTROLLED DOCUMENT (27 JUNE 2024 15:54:45)

UNCONTROLLED DOCUMENT

11. Compartment Classification and Air-Conditioning



11.1 Compartment Classification

Compartment	Features
Main-deck	- Classification **E**
	- Pressurisation
	- Smoke Detection (4)
	- **Accessible** during flight

11.2 Air-Conditioning

	Main-deck
Temperature	15C to 32.2C
Heating	Yes
Heat Adjust	Yes
Cooling	Yes
Ventilation	Yes

UNCONTROLLED DOCUMENT

UNCONTROLLED DOCUMENT

UNCONTROLLED DOCUMENT (27 JUNE 2024 15:54:45)

12. Aircraft Cabin Contour Dimensions

12.1 Aircraft Contour Zones



12.1.1 Cargo Compartment Dimensions

Position	Length (cm)	Volume (m3)
1	190	2,9
2	244	8,61
3	319	11,26
4	313	11,05
5	138	3,5
Total		56

***Note:** While the total dimensions of the cabin are the same for all aircraft, ECKAI has been divided into 8 compartments instead of the standard 5.

UNCONTROLLED DOCUMENT
UNCONTROLLED DOCUMENT

UNCONTROLLED DOCUMENT (27 JUNE 2024 15:54:45)

UNCONTROLLED DOCUMENT

13. Maximum Position Weights

13.1 Maximum Main-deck Zone Weights in Kilograms

Valid for all registrations except for ECKAI

Zones	Max Zone Weight	Max Floor Panel Load (kg/m2)	Max. Floor Structure load (kg/m2)
1	1430	300	610
2	1430		
3	1430		
4	1430		
5	1430		

Valid for Registration ECKAI only.

Zones	Max Zone Weight	Max Floor Panel Load (kg/m2)	Max. Floor Structure load (kg/m2)
1	182	300	610
2	1180		
3	1180		
4	1180		
5	1180		
6	1180		
7	816		
8	362		

UNCONTROLLED DOCUMENT

UNCONTROLLED DOCUMENT

UNCONTROLLED DOCUMENT (27 JUNE 2024 15:54:45)

UNCONTROLLED DOCUMENT

14. Loading and Un-Loading

14.1 Un-Loading Sequence

Un-load the main deck in the following numbered sequence, and respect the standard step un-loading method:



Note: For loading on aircraft with Compartment numbering 1 thru 8.

1. **Un-load compartment 1**
2. **Un-load compartment 8**
3. **Un-load 7 thru 2**

No More than 1 person allowed at the same time in zone 5 (8)

14.2 Loading Sequence

Load the main deck in the following numbered sequence, and respect the standard step un-loading method:

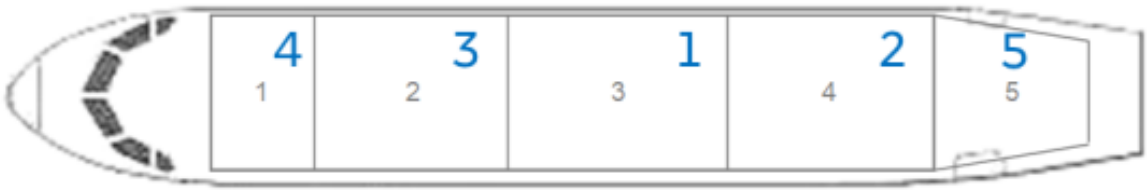

Note: For loading on aircraft with Compartment numbering 1 thru 8.

1. **Load compartments 3 thru 6**
2. **Load compartments 1 and 2**
3. **Load compartments 7 thru 8**

14.3 Loading Notes

14.3.1 Tail-Tipping

The ATR42 is very susceptible to tail-tipping, and the utmost care must be taken whilst un-loading and loading the aircraft to prevent the Centre of Gravity moving to a position that would result in tail-tipping. Following the prescribed un-loading and loading sequence is therefore of paramount importance.

UNCONTROLLED DOCUMENT (27 JUNE 2024 15:54:45)

15. Rigid, Oversized and Special Loads

15.1 Aircraft Engines

This aircraft type does not support the carriage of aircraft engines.

15.2 Live Animals

15.2.1 Horses

This aircraft type does not support the carriage of horses.

15.2.2 Other Live Animals

The following table provides a list of commonly transported animals. If there is a requirement to transport animals not listed below, contact DHL de Guatemala, S.A. for more information.

	Main-Deck
Day-old chickens	Yes
Dogs or Cats	
Small Mammals or Birds	
Tropical Fish	
Reptiles or Amphibians	
Eels	
Crustaceans or Molluscs	
Insects	
Hatching eggs	

UNCONTROLLED DOCUMENT
UNCONTROLLED DOCUMENT

UNCONTROLLED DOCUMENT (27 JUNE 2024 15:54:45)

16. Restricted Commodities Loading

16.1 Radioactive (RRY), Magnetised (MAG) and Cargo Aircraft Only (CAO)

The following Dangerous Good type loading restrictions apply. The Dangerous Good type can be loaded on positions marked with a 'Y'. The Dangerous Good type cannot be loaded on positions marked with a 'N'.

Valid for all registrations except ECKAI:

	Position				
DG Type	1	2	3	4	5
MAG	N	N	N	N	Y
CAO	Y	N	N	N	N
RRY (Class 7) Max.TI 30.0	N	N	N	N	Y

Valid for ECKAI only:

	Position							
DG Type	1	2	3	4	5	6	7	8
MAG	N	N	N	N	N	N	N	Y
CAO	Y	N	N	N	N	N	N	N
RRY (Class 7) Max.TI 30.0	N	N	N	N	N	N	N	Y

16.2 Dry Ice

Please see the Global Supplementary Operational Document **Dry Ice Consolidation table** for the current maximum allowed Dry Ice limits.

16.3 Dry Ice (ICE) and Live Animals (AVI)

There is no additional weight limit for the loading of Dry Ice (ICE) together with Live Animals (AVI) on the Main-deck.

When loading AVI and ICE together in the main-deck, **keep a minimum distance of one loading position, and load AVI forward of ICE.**

Load the AVI higher than the ICE.

16.4 Lithium Batteries

Please see the Global Supplementary Operational Document **Lithium Battery Loadability Consolidation Table** for the current UN3480 Section IA/IB (RBI), UN3090 Section IA/IB (RBM), UN3481 Section I (RLI), UN3091 Section I (RLM) load ability limits.

UNCONTROLLED DOCUMENT (27 JUNE 2024 15:54:45)

17. Messaging and Reporting

17.1 Messaging

Standard messaging rules apply.

17.2 Reporting

Standard messaging rules apply.

UNCONTROLLED DOCUMENT
UNCONTROLLED DOCUMENT

UNCONTROLLED DOCUMENT (27 JUNE 2024 15:54:45)

UNCONTROLLED DOCUMENT

18. Load Control Data

18.1 Standard Mass Additions

18.1.1 Additional Crew Members (ACM)

Maximum Number of ACMs:	1
Mass of ACM:	85 k

18.1.2 Fly Away Kit (FAK) and Ballast

Fly Away Kit (FAK):	Not Applicable.
Ballast:	-

18.2 Minimum Fuel and Standard Taxi Fuel

Minimum Fuel:	Not Applicable.
Standard Taxi Fuel:	20 kg

18.3 LMC Restrictions

Computer Loadsheet:	+/- 169 kg (1% of the MTOW)
Manual Loadsheet:	+/- 169 kg (1% of the MTOW)

UNCONTROLLED DOCUMENT

UNCONTROLLED DOCUMENT

UNCONTROLLED DOCUMENT (27 JUNE 2024 15:54:45)

19. Maximum Package Dimensions

Please contact Swiftair for any applicable restrictions

UNCONTROLLED DOCUMENT
UNCONTROLLED DOCUMENT

UNCONTROLLED DOCUMENT (27 JUNE 2024 15:54:45)