UNCONTROLLED DOCUMENT

UNCONTROLLED DOCUMENT

SWT B734SF
Swiftair B737-400SF

Revision: 2
Date: 21 November 2024

1 Swiftair Boeing 737-400SF Registrations
2 Aircraft Dimensions
3 Aircraft Servicing Points and Specifications
4 Ground Support Equipment
5 Standard Turnaround Times
6 Safety Areas
7 Strong Wind Conditions
8 Aircraft Door Dimensions
9 Compartment Classification and Air-Conditioning
10 Aircraft Cabin Contour Dimensions
11 Maximum Position Weights
12 Aircraft ULD Compatibility
13 Loading and Un-Loading
14 Rigid, Oversized and Special Loads
15 Restricted Commodities Loading
16 Messaging and Reporting
17 Load Control Data
18 Maximum Package Dimensions

UNCONTROLLED DOCUMENT (21 NOVEMBER 2024 16:05:12)

Page	Date	Comment
14	21 November 2024	ULD types no longer available in the network removed. *(Minor)*
17	21 November 2024	Guidance on the handling of special loads information added. *(Minor)*
18	21 November 2024	Global airside replaced with, Special Loads Regional contact. *(Minor)*

UNCONTROLLED DOCUMENT

UNCONTROLLED DOCUMENT

1. Swiftair Boeing 737-400SF Registrations

IATA Designator:	WT
ICAO Designator:	SWT
Valid for:	**ECMAD, ECMEY, ECMFE, ECMIE, ECMNM, ECNLU, ECNMK, ECNMJ, ECNML, ECNLS.**

Note: Aircraft contained within this entry have been converted by different companies and may have different characteristics. Where differences occur, the applicable aircraft registrations will be displayed at the top of the sub-chapter header.

UNCONTROLLED DOCUMENT
UNCONTROLLED DOCUMENT

2. Aircraft Dimensions

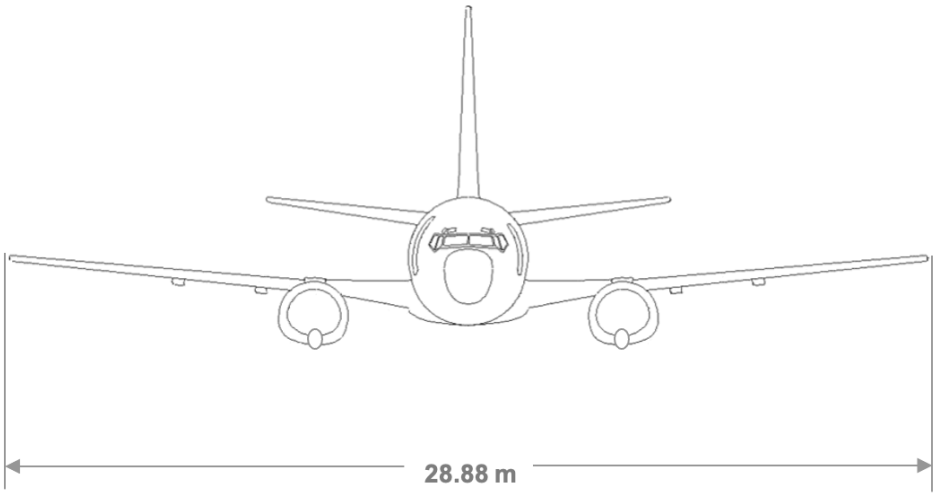

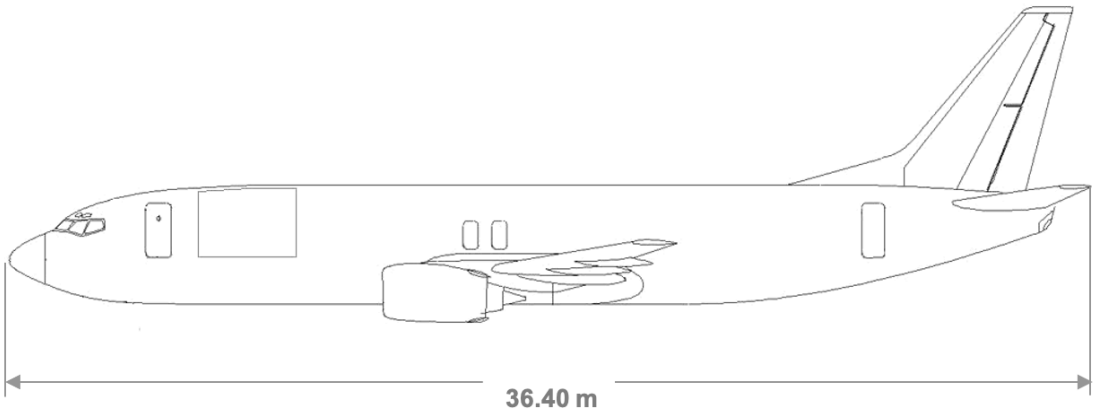

UNCONTROLLED DOCUMENT
UNCONTROLLED DOCUMENT

UNCONTROLLED DOCUMENT

UNCONTROLLED DOCUMENT

UNCONTROLLED DOCUMENT

3. Aircraft Servicing Points and Specifications

3.1 Servicing Points

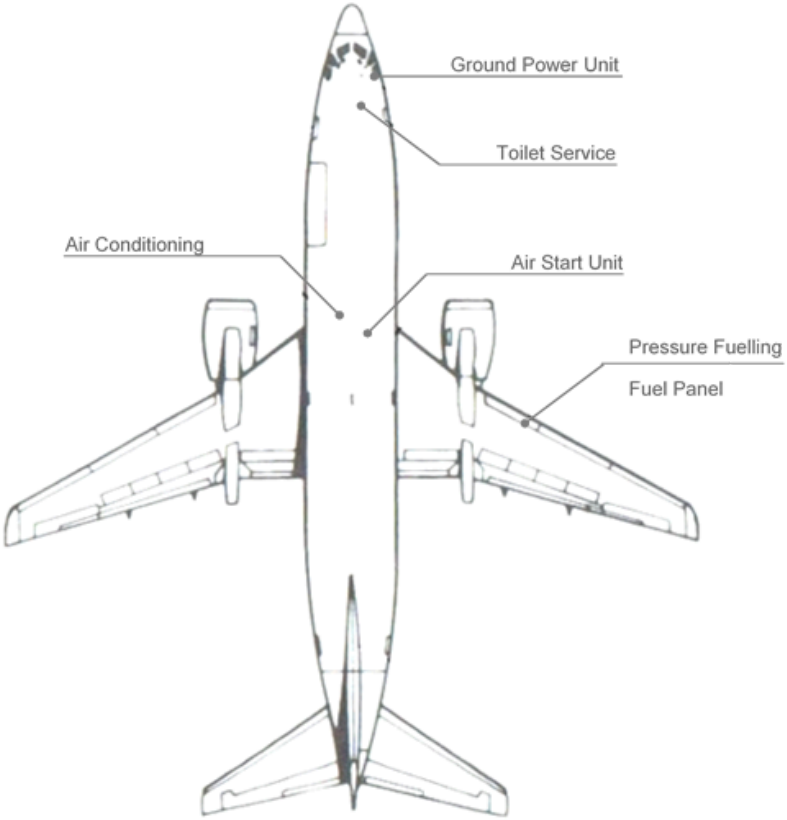

3.2 Servicing Specifications

System	Requirements	Notes
Ground Power Unit	115/200V AC / 60 kVA / 400 Hz	
Fuel	Jet A1	Fuel Control Panel **on RH wing only**
Air Condition Unit	Maximum Flow Rate 210 ppm	1 ACU inlet available
Air Start Unit	Minimum Capacity 120-145 ppm Max. / Min. pressure 45 / 30 psi	1 ASU inlet available.

UNCONTROLLED DOCUMENT (21 NOVEMBER 2024 16:05:12)

UNCONTROLLED DOCUMENT

4. Ground Support Equipment

4.1 Positioning of GSE

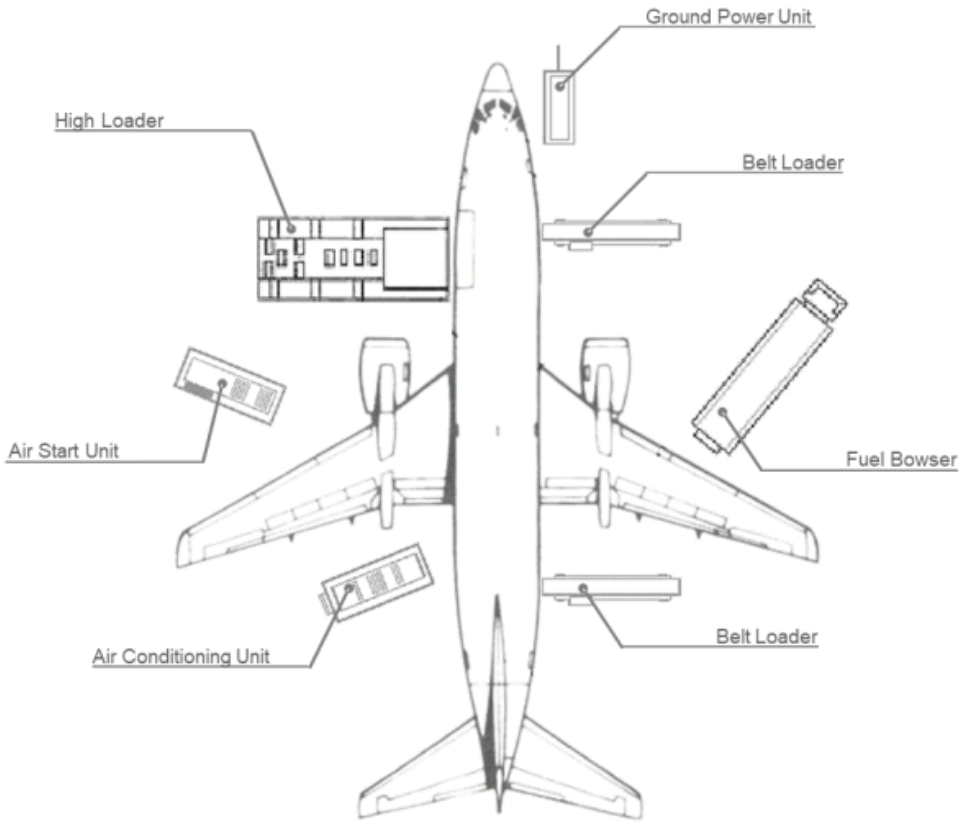

UNCONTROLLED DOCUMENT

4.2 GSE Requirements

GSE	Type	Quantity
High Loader	Standard	1
Crew stairs	Platform height 2.62 – 2.77 meters	1
Ground Power Unit	Diesel, Electric or Ground-Power	1
Air Start Unit	Standard	1
Belt Loader	Standard	1 or 2
Tractor	N/A	4
Dolly Wagon Main-deck	125”/88” & 60.5”/61.4” capable	Up to 11
Belly Container / Wagon	As required	According to load

UNCONTROLLED DOCUMENT (21 NOVEMBER 2024 16:05:12)

5. Standard Turnaround Times

Turn-around time for a transit stop:	00:35 hour (partial off- and on-load)
Turn-around time for an end stop:	00:50 hour (full off- and on-load)

UNCONTROLLED DOCUMENT
UNCONTROLLED DOCUMENT

UNCONTROLLED DOCUMENT

6. Safety Areas

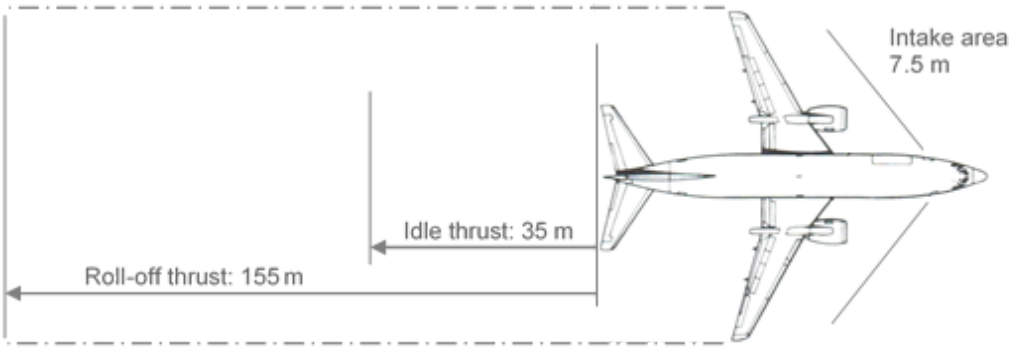

UNCONTROLLED DOCUMENT

UNCONTROLLED DOCUMENT

UNCONTROLLED DOCUMENT (21 NOVEMBER 2024 16:05:12)

UNCONTROLLED DOCUMENT

7. Strong Wind Conditions

If the wind conditions on the ramp reach the following speeds, the corresponding actions shall be taken.

Wind Speed	Action
Up to 45 knots	Normal Operations: All doors can be opened and left open
More than 45 knots	Do not open additional doors
More than 45 knots	All open doors shall be closed immediately

UNCONTROLLED DOCUMENT

UNCONTROLLED DOCUMENT

UNCONTROLLED DOCUMENT (21 NOVEMBER 2024 16:05:12)

8. Aircraft Door Dimensions

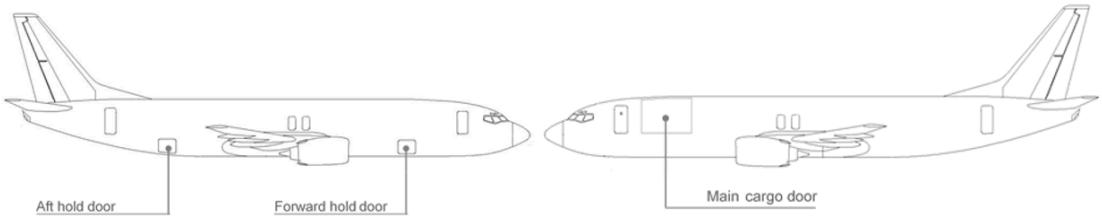

Door width, height, and sill height are defined as follows.

(This drawing is for illustration purposes only and may not be an exact representation of this aircraft type)

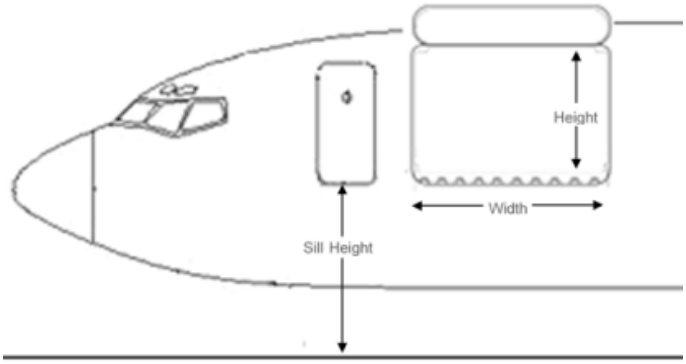

All dimensions are in centimetres (cm).

Door	Door Width	Door Height	Min. Door Sill Height	Max. Door Sill Height
Crew Door	-	-	262	277
Main Deck	355	219	265	280
Forward Hold	121	88	127	140
Aft Hold	121	88*	137	137

Note: *Door is angled. Measurement is at forward side of door; aft side is lower.

UNCONTROLLED DOCUMENT
UNCONTROLLED DOCUMENT

UNCONTROLLED DOCUMENT (21 NOVEMBER 2024 16:05:12)

UNCONTROLLED DOCUMENT

9. Compartment Classification and Air-Conditioning

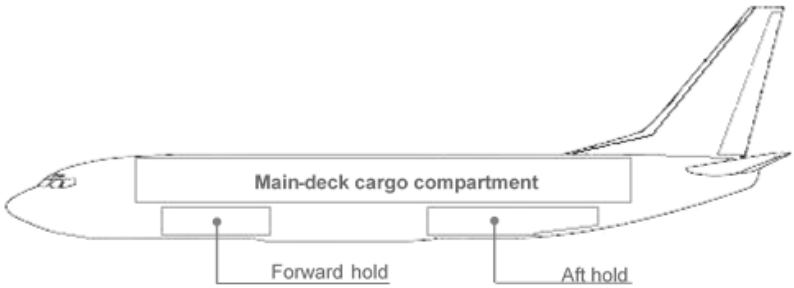

9.1 Compartment Classification

Compartment		Features
Main-deck	Position A loaded with 88" ULD **with** 50 cm (18") aisle	- Classification B
		- Pressurisation
		- Smoke Detection
		- Accessible during flight
	Position A loaded with 88" ULD **without** 50 cm (18") aisle	- Classification E
		- Pressurisation
		- Smoke Detection
		- In-accessible during flight
Lower-deck All Compartments		- Classification C
		- Pressurisation
		- Smoke Detection
		- Fire Suppression
		- In-accessible during flight

9.2 Air-Conditioning

	Main-deck	Forward Hold	Aft Hold
Temperature	1C to 22C	Max 3C*	Max 3C*
Heating	Yes	No	
Heat adjust			
Cooling			
Ventilation		Yes	

Note: *Temperature in the Forward and Aft Holds depend on the Main-deck heating but will never be more than 3C. No separate heating of the lower-deck.

UNCONTROLLED DOCUMENT (21 NOVEMBER 2024 16:05:12)

10. Aircraft Cabin Contour Dimensions

10.1 Aircraft Layout Type 1

Valid for registrations: **ECMAD, ECMEY, ECMFE, ECMIE, ECMNM, ECNLU, ECNMK, ECNMJ, ECNML, ECNLS.**

The aircraft is divided into two contour zones: CI & CII.

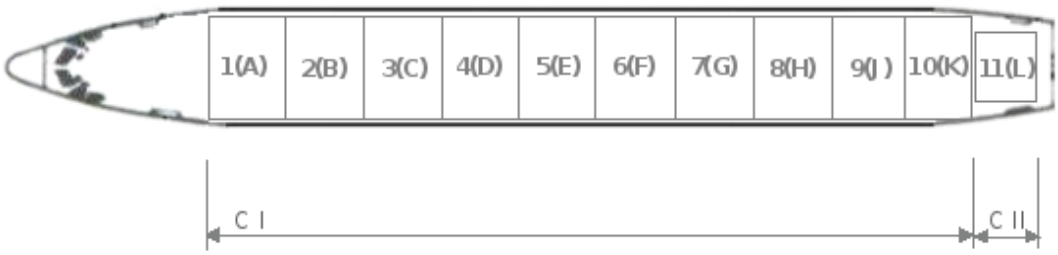

10.1.1 Contour CI

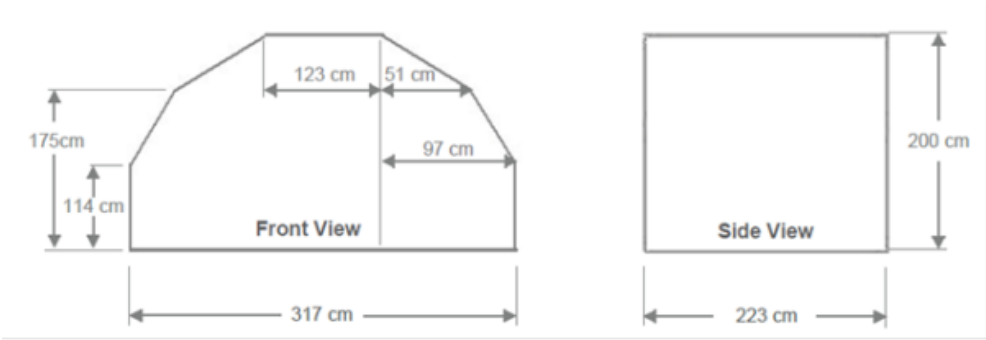

10.1.2 Contour CII



UNCONTROLLED DOCUMENT
UNCONTROLLED DOCUMENT

UNCONTROLLED DOCUMENT (21 NOVEMBER 2024 16:05:12)

11. Maximum Position Weights

11.1 Maximum Main-deck ULD Weights in Kilograms

Valid for registrations: **ECMAD, ECMEY, ECMFE, ECMIE, ECMNM, ECNLU, ECNMK, ECNMJ, ECNML, ECNLS.**

	ULD Position										
ULD Size	1	2	3	4	5	6	7	8	9	10	11
125”/ 88”	1814	2948			3628		2948			1700	
61.5”/60.4											1020

11.2 Maximum Total Main-deck Load

9G Barrier Limit: 20.865 Kg

11.3 Maximum Lower-deck Compartment Weights in Kilograms

	Forward hold		Aft hold	
Compartment	F1	F2	A1	A2
Max. Weight per section	1245	2059	3062	1125
Max. Weight per Hold	3304		4187	
Volume (ft3) per section	217	390	550	216
Volume (ft3) per Hold	607		766	
Max. floor Loading	732.4 (kg/m2)			

UNCONTROLLED DOCUMENT
UNCONTROLLED DOCUMENT

UNCONTROLLED DOCUMENT (21 NOVEMBER 2024 16:05:12)

UNCONTROLLED DOCUMENT

12. Aircraft ULD Compatibility

12.1 Aircraft Layout

Valid for Registrations: **ECMAD, ECMEY, ECMFE, ECMIE, ECMNM, ECNLU, ECNMK, ECNMJ, ECNML, ECNLS.**



Configuration 1: 10 x Lateral 125”/88” and 1 x 60.4”/61.5” positions

UNCONTROLLED DOCUMENT

UNCONTROLLED DOCUMENT

UNCONTROLLED DOCUMENT (21 NOVEMBER 2024 16:05:12)

UNCONTROLLED DOCUMENT

12.2 ULD Compatibility Table

The following ULD type loading restrictions apply. The ULD type can be loaded on positions marked with a 'Y'. The ULD type cannot be loaded on positions marked with a 'N'.

		ULD Type								
	Pos	AAA	AAC	AAJ	AKE	LAK	LAY	PAG	RKN	RKE
Configuration 1:	1	Y	Y1	Y	N	Y	Y	Y	N	N
	2	Y	Y1	Y	N	Y	Y	Y	N	N
	3	Y	Y1	Y	N	Y	Y	Y	N	N
	4	Y	Y1	Y	N	Y	Y	Y	N	N
	5	Y	Y1	Y	N	Y	Y	Y	N	N
	6	Y	Y1	Y	N	Y	Y	Y	N	N
	7	Y	Y1	Y	N	Y	Y	Y	N	N
	8	Y	Y1	Y	N	Y	Y	Y	N	N
	9	Y	Y1	Y	N	Y	Y	Y	N	N
	10	Y	Y1	Y	N	Y	Y	Y	N	N
	11	N	N	N	Y	N	N	N	Y	Y

Y1: Only AAC serial range 9021 & higher allowed

Notes:

Mind safety clearance in positions 1(A) and 10(K)

Pallet stacks must not be loaded on to position 10(K) as this can cause damage inside of the fuselage during flight.

UNCONTROLLED DOCUMENT

UNCONTROLLED DOCUMENT (21 NOVEMBER 2024 16:05:12)

UNCONTROLLED DOCUMENT

13. Loading and Un-Loading

13.1 Un-Loading Sequence

Step 1: Un-load the aft lower deck.

Step 2: Un-load the ULDs on the main deck in the following numbered sequence, **and respect standard stage un-loading method**.

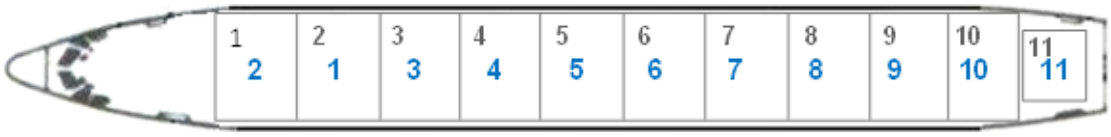

Step 3: Un-load the forward lower deck.

13.2 Loading Sequence

Step 1: Load the forward lower deck.

Step 2: Load the ULDs on the main deck in the following numbered sequence, **and respect standard stage loading method**.

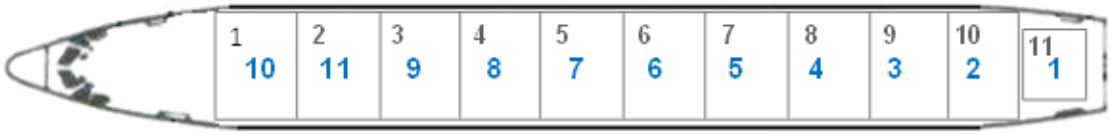

Step 3: Load the aft lower deck.

UNCONTROLLED DOCUMENT

UNCONTROLLED DOCUMENT (21 NOVEMBER 2024 16:05:12)

UNCONTROLLED DOCUMENT

13.3 Loading Notes

13.3.1 Tail-Tipping

This aircraft type is susceptible to tail-tipping. To prevent tail-tipping due to a sudden CoG shift, the prescribed un-loading and loading sequences must be strictly adhered to and ULDs must be moved on the aircraft at a slow pace.

13.3.2 Tail Post

This aircraft type is not fitted for or does not require a tail post.

13.3.3 Parallel Dolly-train Un-load

Parallel dolly-train un-load is not permitted.

13.3.4 ULD Clearance



There is very limited clearance between some ULDs and the inner roof lining on this aircraft. ULDs, AAA and AAC/LAY especially, which are even slightly out of contour will impact the roof lining and cause damage. Due care must therefore be exercised when un-loading and loading this aircraft.

UNCONTROLLED DOCUMENT

UNCONTROLLED DOCUMENT

UNCONTROLLED DOCUMENT (21 NOVEMBER 2024 16:05:12)

UNCONTROLLED DOCUMENT

14. Rigid, Oversized and Special Loads

For guidance on the handling of special loads, please refer to the Special Loads Regional Contact Instructions outlined in Chapter 6 **6.12.22.3 - Determining Loadability of Special Loads**. Where direct operator approval is required, the Regional Airside Team will liaise with Global Airside as needed.

14.1 Floating / Heavy Pallets

ULDs which are heavier than the standard allowed maximum gross weight may be loaded on the main deck on a floating position.

Permission must be sought from your Special Loads Regional Contact before accepting any loads which require loading on a floating position.

14.2 Crushable Cargo Requirements

If Rigid cargo is loaded on the aircraft, the first loaded position on the aircraft must be occupied with a Crushable Cargo loaded ULD suitable for protecting the barrier wall against unrestrained Rigid Cargo.

14.3 Piercing Cargo

Piercing cargo may not be loaded on the first and last loaded position on the aircraft.

14.4 Aircraft Engines

Aircraft engines shall be loaded in positions 3/3C-10/10K only.

The ability to load aircraft engines depends on actual size and weight. The biggest engine which can be loaded on this aircraft is the CFM56-3.

Permission must be sought from your Special Loads Regional contact before accepting aircraft engines of any type.

UNCONTROLLED DOCUMENT

UNCONTROLLED DOCUMENT

UNCONTROLLED DOCUMENT (21 NOVEMBER 2024 16:05:12)

UNCONTROLLED DOCUMENT

14.5 Live Animals

14.5.1 Horses

Total number of horses allowed is limited due to air conditioning restrictions. Contact your Special Loads Regional Contact for more details.

14.5.2 Other Live Animals

The following table provides a list of commonly transported animals. If there is a requirement to transport animals not listed below, contact your Special Loads Regional Contact.

<table>
<tr><th></th><th>Main-Deck</th><th>FWD Hold</th><th>AFT Hold</th></tr>
<tr><td>Horses</td><td>X</td><td rowspan="4">X</td><td rowspan="4"></td></tr>
<tr><td>Day-old chickens</td><td>Yes</td></tr>
<tr><td>Monkeys</td><td rowspan="4">X</td></tr>
<tr><td>Pigs</td></tr>
<tr><td>Cattle</td><td rowspan="9">X</td><td rowspan="9">X</td></tr>
<tr><td>Sheep or Goats</td></tr>
<tr><td>Dogs or Cats</td><td>Yes</td></tr>
<tr><td>Small mammals or Birds</td><td rowspan="3">X</td></tr>
<tr><td>Tropical Fish</td></tr>
<tr><td>Reptiles or Amphibians</td></tr>
<tr><td>Eels</td><td rowspan="4">Yes</td></tr>
<tr><td>Crustaceans or Molluscs</td></tr>
<tr><td>Bees</td></tr>
<tr><td>Hatching eggs</td></tr>
</table>

X: Depends on accessibility, air conditioning and flight duration. Contact your Special Loads Regional Contact for more details.

UNCONTROLLED DOCUMENT (21 NOVEMBER 2024 16:05:12)

15. Restricted Commodities Loading

15.1 Radioactive (RRY), Magnetised (MAG) and Cargo Aircraft Only (CAO)

The following Dangerous Good type loading restrictions apply. The Dangerous Good type can be loaded on positions marked with a 'Y'. The Dangerous Good type cannot be loaded on positions marked with a 'N'.

DG Type	Position												
	1/ 1(A)	2/ 2(B)	3/ 3(C)	4/ 4(D)	5/ 5(E)	6/ 6(F)	7/ 7(G)	8/ 8(H)	9/ 9(J)	10/ 10(K)	11/ 11(L)	FWD	AFT
MAG	N	N	N	N	N	N	N	N	N	Y	Y	N	N
CAO	Y	Y	Y	Y	Y	Y	Y	Y	Y	Y	N	Y	Y
RRY (max. 50 TI combined)	N	N	Y	Y	Y	Y	Y	Y	Y	Y	Y	N	N
RRY (max. 200 TI combined)	N	N	N	N	Y	Y	Y	Y	Y	Y	Y	N	N

Note: Cargo Aircraft Only (CAO) can be loaded on any Main Deck position A to K provided they are loaded accessible. Accessible means that:

- The CAO is loaded on a pallet
- All positions forward of the CAO are loaded with 88" pallets with aisle

15.2 Dry Ice

Please see the Global Supplementary Operational Document **Dry Ice Consolidation table** for the current maximum allowed Dry Ice limits.

Dry Ice (ICE) and Live Animals (AVI)

There is no weight limit for the loading of Dry Ice (ICE) together with Live Animals (AVI) on the Main-deck.

15.3 Lithium Batteries

Please see the Global Supplementary Operational Document **Lithium Battery Loadability Consolidation Table** for the current UN3480 Section IA/IB (RBI), UN3090 Section IA/IB (RBM), UN3481 Section I (RLI), UN3091 Section I (RLM) load ability limits.

UNCONTROLLED DOCUMENT
UNCONTROLLED DOCUMENT

UNCONTROLLED DOCUMENT

16. Messaging and Reporting

16.1 Messaging

Standard messaging rules apply.

16.2 Reporting

Standard reporting rules apply.

UNCONTROLLED DOCUMENT

UNCONTROLLED DOCUMENT

UNCONTROLLED DOCUMENT (21 NOVEMBER 2024 16:05:12)

17. Load Control Data

17.1 Standard Mass Additions

17.1.1 Additional Crew Members (ACM)

Maximum Number of ACMs:	6
Mass of ACM:	85 kg

17.1.2 Fly Away Kit (FAK) and Ballast

Fly Away Kit (FAK): not carried as standard on this aircraft.

Note: If operator (or maintenance provider) adds parts resulting in weight adjustments to the FAK, the overall responsibility shall be to the operator and their OCC to inform the respective station by email notification. However, it is the responsibility of the ramp supervisor to verify on every flight and report major visible discrepancies to NCG.

Ballast: Not as standard, but often required for ferry flights and then to be planned as additional weight as not included in the DOW/DOI.

Above or adjusted weights must be added in Sable and on the Load Plan by Load Control for every flight and verified by the Ramp Team.

17.2 Minimum Fuel and Standard Taxi Fuel

Minimum Fuel:	Not Applicable
Standard Taxi Fuel:	300 kg

17.3 LMC Restrictions

Computer Load sheet Maximum LMC:	+/- 200 kg
Manual Load sheet Maximum LMC:	+/- 500 kg

17.4 Minimum Flight Weight

Minimum flight weight:	35500 kg

UNCONTROLLED DOCUMENT
UNCONTROLLED DOCUMENT

UNCONTROLLED DOCUMENT (21 NOVEMBER 2024 16:05:12)

UNCONTROLLED DOCUMENT

18. Maximum Package Dimensions

18.1 Main Cargo Door

Height (cm)	13	25	51	76	102	127	152	178	203	224	254	274	318
Width (cm)	Length (cm)												
13	1651.0	1651.0	1651.0	1270.0	990.6	812.8	685.8	609.6	533.4	508.0	457.2	317.5	317.5
25	1651.0	1651.0	1651.0	1270.0	990.6	812.8	685.8	609.6	533.4	508.0	457.2	317.5	317.5
51	1651.0	1651.0	1651.0	1219.2	965.2	787.4	660.4	584.2	508.0	482.6	431.8	317.5	317.5
76	1651.0	1651.0	1651.0	1219.2	965.2	787.4	660.4	584.2	508.0	482.6	431.8	317.5	317.5
102	1651.0	1651.0	1422.4	1092.2	889.0	736.6	635.0	558.8	482.6	457.2	406.4	317.5	317.5
127	1651.0	1651.0	1422.4	1092.2	889.0	736.6	635.0	558.8	482.6	457.2	406.4	317.5	317.5
152	1651.0	1651.0	1168.4	914.4	762.0	635.0	558.8	508.0	431.8	406.4	355.6	317.5	317.5
178	1651.0	1651.0	939.8	762.0	635.0	558.8	482.6	431.8					
203	1651.0	1651.0	736.6	609.6	508.0	457.2	406.4						

18.2 Forward lower-deck hold

Height (cm)	13	25	38	51	64	76	89	102	114	122
Width (cm)	Length (cm)									
13	548.6	541.0	535.9	530.9	457.2	406.4	378.5	348.0	312.4	294.6
25	546.1	538.5	533.4	505.5	444.5	391.2	363.2	332.7	299.7	281.9
30	546.1	538.5	533.4	490.2	442.0	386.1	358.1	327.7	294.6	276.9
36	546.1	538.5	525.8	475.0	429.3	375.9	348.0	317.5	284.5	269.2
41	546.1	538.5	515.6	467.4	396.2	368.3	340.4	309.9	276.9	261.6
46	546.1	538.5	508.0	444.5	383.5	355.6	327.7	297.2	266.7	251.5
51	546.1	525.8	477.5	421.6	370.8	342.9	315.0	287.0	254.0	241.3
56	546.1	515.6	449.6	398.8	358.1	330.2	304.8	274.3	243.8	231.1
61	523.2	477.5	421.6	373.4	345.4	320.0	292.1	264.2	233.7	221.0
66	505.5	442.0	393.7	353.1	327.7	299.7	274.3	246.4	215.9	205.7
71	459.7	406.4	355.6	325.1	297.2	271.8	246.4	218.4	190.5	182.9
76	406.4	370.8	330.2	304.8	279.4	251.5	226.1	200.7	172.7	167.6
81	378.5	345.4	317.5	289.6	264.2	238.8	213.4	188.0	160.0	157.5
86	340.4	309.9	284.5	259.1	233.7	208.3	182.9	157.5	134.6	134.6

UNCONTROLLED DOCUMENT (21 NOVEMBER 2024 16:05:12)

UNCONTROLLED DOCUMENT

18.3 Aft Lower-deck hold

Height (cm)	13	25	38	51	64	76	89	102	114	122
Width (cm)	Length (cm)									
13	688.3	683.3	678.2	609.6	513.1	444.5	391.2	348.0	309.9	292.1
25	685.8	680.7	670.6	556.3	477.5	391.2	355.6	325.1	292.1	274.3
30	683.3	678.2	614.7	535.9	462.3	383.5	342.9	312.4	279.4	264.2
36	680.7	675.6	594.4	505.5	442.0	375.9	335.3	307.3	274.3	259.1
41	678.2	668.0	558.8	480.1	424.2	365.8	325.1	297.2	264.2	248.9
46	675.6	624.8	525.8	457.2	383.5	355.6	312.4	284.5	254.0	238.8
51	670.6	576.6	492.8	434.3	370.8	342.9	299.7	271.8	241.3	228.6
56	635.0	533.4	462.3	411.5	358.1	330.2	284.5	256.5	226.1	215.9
61	576.6	492.8	434.3	368.3	342.9	315.0	271.8	238.8	213.4	200.7
66	525.8	457.2	406.4	350.5	322.6	297.2	251.5	223.5	195.6	188.0
71	477.5	421.6	378.5	327.7	302.3	274.3	228.6	203.2	182.9	170.2
76	431.8	388.6	327.7	299.7	274.3	248.9	200.7	177.8	147.3	144.8
81	391.2	355.6	309.9	284.5	259.1	203.2	177.8	154.9		
86	353.1	304.8	279.4	254.0						

UNCONTROLLED DOCUMENT

UNCONTROLLED DOCUMENT

UNCONTROLLED DOCUMENT (21 NOVEMBER 2024 16:05:12)