UNCONTROLLED DOCUMENT



SWT B738SF
Swiftair B737-800SF

Revision: 6
Date: 28 November 2024

1 Swift Air Boeing 737-800SF Registrations
2 Aircraft Dimensions
3 Aircraft Servicing Points and Specifications
4 Ground Support Equipment
5 Standard Turnaround Times
6 Safety Areas
7 Strong Wind Conditions
8 Aircraft Door Dimensions
9 Compartment Classification and Air-Conditioning
10 Aircraft Cabin Contour Dimensions
11 Maximum Position Weights
12 Aircraft ULD Compatibility
13 Loading and Un-Loading
14 Rigid, Oversized and Special Loads
15 Restricted Commodities Loading
16 Messaging and Reporting
17 Load Control Data
18 Maximum Package Dimensions

UNCONTROLLED DOCUMENT

UNCONTROLLED DOCUMENT

UNCONTROLLED DOCUMENT

Page	Date	Comment
14	01 October 2024	ULD types no longer available in the network removed. *(Minor)*
17	01 October 2024	Guidance on the handling of special loads information added. *(Minor)*

UNCONTROLLED DOCUMENT

UNCONTROLLED DOCUMENT

UNCONTROLLED DOCUMENT (28 NOVEMBER 2024 16:31:16)

1. Swift Air Boeing 737-800SF Registrations

IATA Designator:	W3
ICAO Designator:	SWT
Valid for:	**ECIXO, ECNUG, ECNXU, ECNXV, ECOBN, ECOBQ, ECNXX**

UNCONTROLLED DOCUMENT
UNCONTROLLED DOCUMENT

2. Aircraft Dimensions

All dimensions in meters

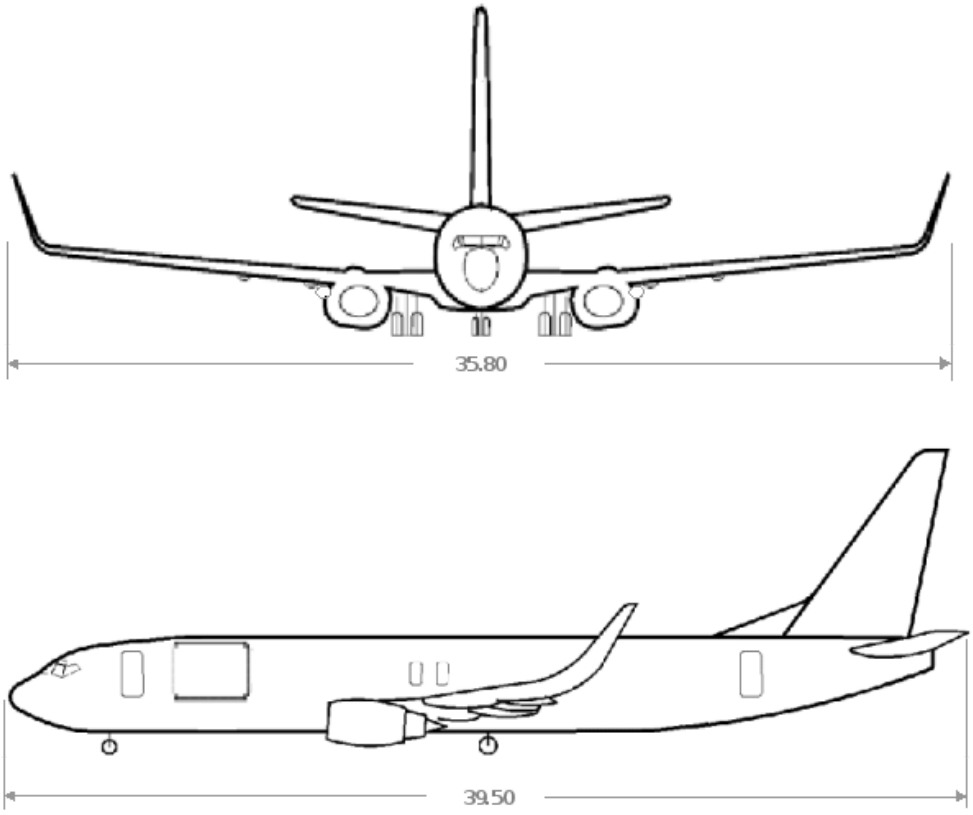

UNCONTROLLED DOCUMENT
UNCONTROLLED DOCUMENT

UNCONTROLLED DOCUMENT (28 NOVEMBER 2024 16:31:16)

UNCONTROLLED DOCUMENT

3. Aircraft Servicing Points and Specifications

3.1 Servicing Points

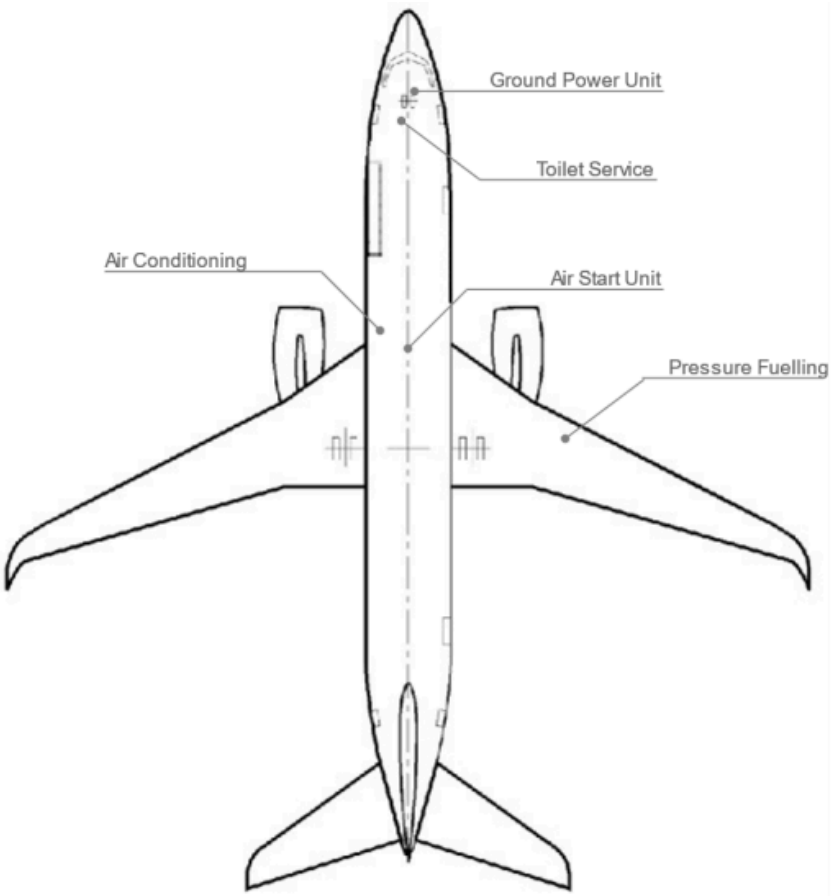

3.2 Servicing Specifications

System	Requirements	Notes
Ground Power Unit	115/200V AC / 60 kVA / 400 Hz	
Fuel	Jet A1	Fuel Control Panel **on RH wing only**
Air Condition Unit	Maximum Flow Rate 210 ppm	1 ACU inlet available
Air Start Unit	Minimum Capacity 120-145 ppm Max. / Min. pressure 45 / 30 psi	1 ASU inlet available.

UNCONTROLLED DOCUMENT

UNCONTROLLED DOCUMENT

UNCONTROLLED DOCUMENT (28 NOVEMBER 2024 16:31:16)

4. Ground Support Equipment

4.1 Positioning of GSE

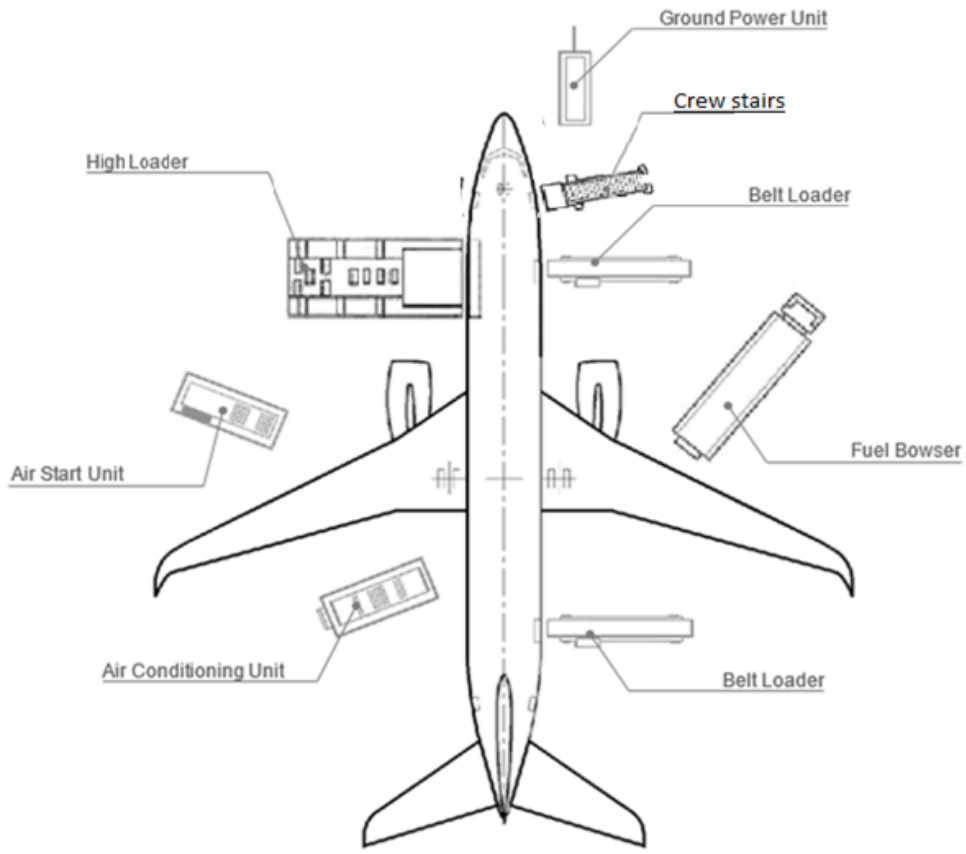

4.2 GSE Requirements

GSE	Type	Quantity
High Loader	Standard	1
Crew stairs	Platform height 2.62 – 2.77 meters	1
Ground Power Unit	Diesel, Electric or Ground-Power	1
Air Start Unit	Standard	1
Belt Loader	Standard	1 or 2
Tractor	N/A	4
Dolly Wagon Main-deck	125”/88” & 60.5”/61.4” capable	Up to 11
Belly Container / Wagon	As required	According to load

UNCONTROLLED DOCUMENT
UNCONTROLLED DOCUMENT

UNCONTROLLED DOCUMENT (28 NOVEMBER 2024 16:31:16)

5. Standard Turnaround Times

Turn-around time for a transit stop:	00:35 hour (partial off- and on-load)
Turn-around time for an end stop:	00:50 hour (full off- and on-load)

UNCONTROLLED DOCUMENT
UNCONTROLLED DOCUMENT

6. Safety Areas

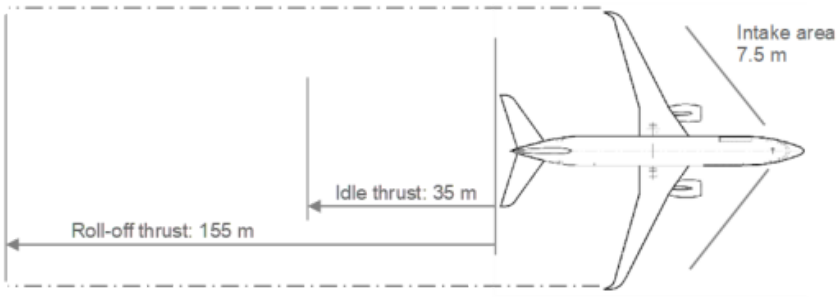

UNCONTROLLED DOCUMENT
UNCONTROLLED DOCUMENT

UNCONTROLLED DOCUMENT (28 NOVEMBER 2024 16:31:16)

UNCONTROLLED DOCUMENT

7. Strong Wind Conditions

If the wind conditions on the ramp reach the following speeds, the corresponding actions shall be taken.

Wind Speed	Action
Up to 40 knots	Normal Operations: All doors can be opened and left open
More than 40 knots	Do not open additional doors
More than 60 knots	All open doors shall be closed immediately

UNCONTROLLED DOCUMENT

UNCONTROLLED DOCUMENT

UNCONTROLLED DOCUMENT (28 NOVEMBER 2024 16:31:16)

8. Aircraft Door Dimensions

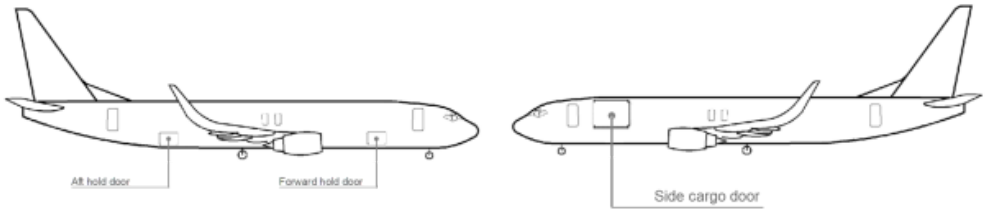

Door width, height, and sill height are defined as follows.

(This drawing is for illustration purposes only and may not be an exact representation of this aircraft type)

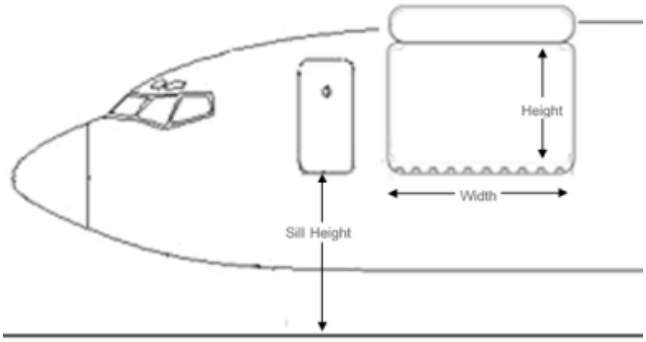

All dimensions are in Centimetres (cm) and Inches (in).

Door	Door Width (cm)	Door Height (cm)	Min. Door Sill Height (in)	Max. Door Sill Height (in)
Crew Door	-	-	103	109
Main Deck	340	214	104	110
Forward Hold	122	89	50	55
Aft Hold	122	84	54	54

UNCONTROLLED DOCUMENT
UNCONTROLLED DOCUMENT

UNCONTROLLED DOCUMENT (28 NOVEMBER 2024 16:31:16)

UNCONTROLLED DOCUMENT

9. Compartment Classification and Air-Conditioning

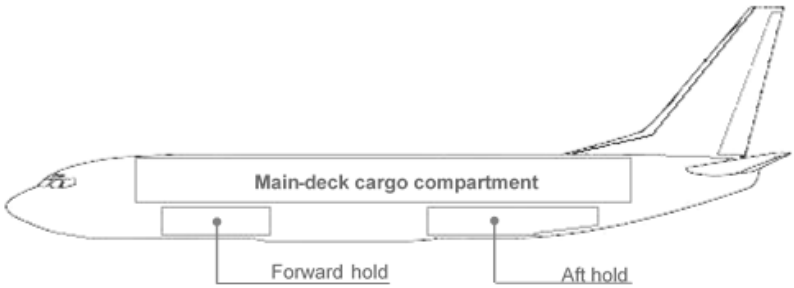

9.1 Compartment Classification

Compartment		Features
Main-deck	Position A loaded with 88" ULD **with** 50 cm (18") isle	- Classification **B**
		- Pressurisation
		- Smoke Detection
		- **Accessible** during flight
	Position A loaded with 88" ULD **without** 50 cm (18") aisle	- Classification **E**
		- Pressurisation
		- Smoke Detection
		- **In-accessible** during flight
Lower-deck All Compartments		- Classification **C**
		- Pressurisation
		- Smoke Detection
		- Fire Suppression
		- **In-accessible** during flight

9.2 Air-Conditioning

	Main-deck	Forward Hold	Aft Hold
Temperature	1C to 22C	Max 3C*	Max 3C*
Heating	Yes	No	
Heat adjust			
Cooling			
Ventilation		Yes	

UNCONTROLLED DOCUMENT (28 NOVEMBER 2024 16:31:16)

UNCONTROLLED DOCUMENT

10. Aircraft Cabin Contour Dimensions

10.1 Aircraft Layout

The aircraft is divided into three contour zones: CI, CII and CIII.

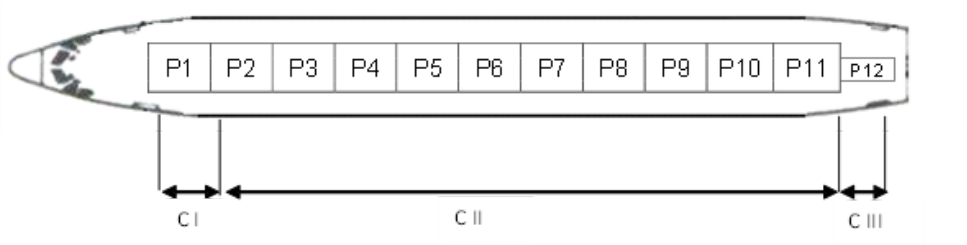

10.1.1 Contour CI

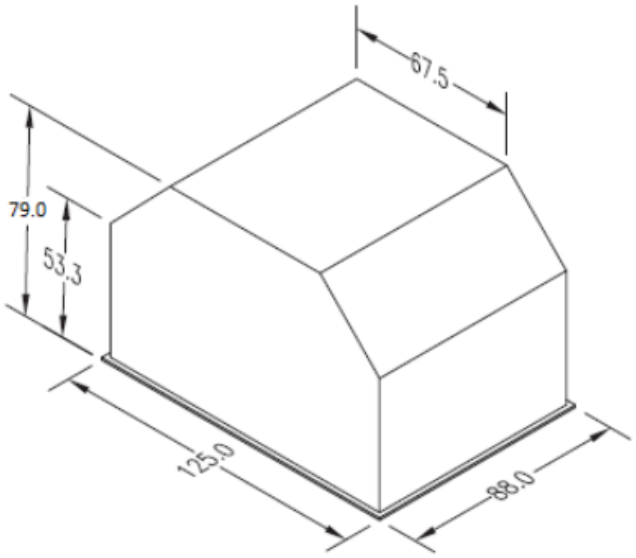

UNCONTROLLED DOCUMENT

UNCONTROLLED DOCUMENT

UNCONTROLLED DOCUMENT (28 NOVEMBER 2024 16:31:16)

UNCONTROLLED DOCUMENT

UNCONTROLLED DOCUMENT

10.1.2 Contour CII

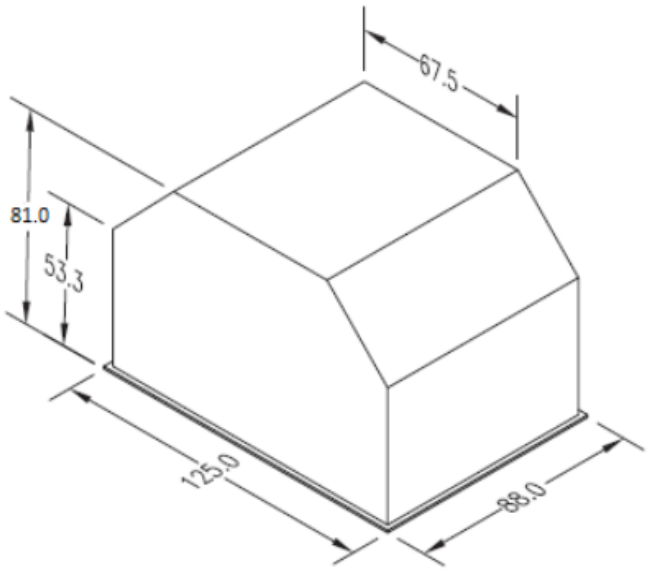

10.1.3 Contour CIII

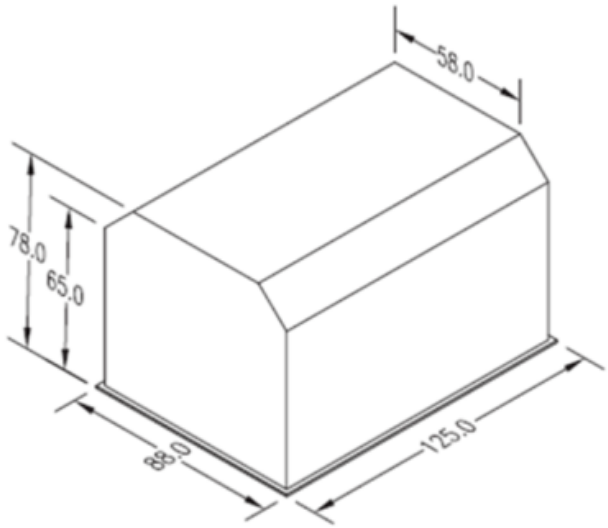

UNCONTROLLED DOCUMENT

UNCONTROLLED DOCUMENT (28 NOVEMBER 2024 16:31:16)

UNCONTROLLED DOCUMENT

11. Maximum Position Weights

11.1 Maximum Main-deck ULD Weights in Kilograms

Valid for **ECIXO, ECNUG, ECNXU**:

	ULD Position (Max. weight in Kilograms)											
ULD Size	P1	P2	P3	P4	P5	P6	P7	P8	P9	P10	P11	P12
125"/ 88"	2540				4082		2495				2177	
61.5"/60.4												1361

Valid for **ECNXV, ECOBN, ECOBQ, ECNXX**:

	ULD Position (Max. weight in Kilograms)											
ULD Size	P1	P2	P3	P4	P5	P6	P7	P8	P9	P10	P11	P12
125"/ 88"	2385	2610	2925		4500		2925			2250		
61.5"/60.4												1575

11.2 Maximum Total Main-deck Load

9G Barrier Limit: 20,865 Kg

11.3 Maximum Lower-deck Compartment Weights in Kilograms

Valid for all registrations:

	Fwd hold		Aft Hold	
Compartment	1	2	3	4
Max. Weight (Kg)	888	2670	3777	667
Max. Hold Weight (Kg)	3558		4444	
Volume (cu ft)	155	517	733	136
	672		869	

UNCONTROLLED DOCUMENT (28 NOVEMBER 2024 16:31:16)

12. Aircraft ULD Compatibility

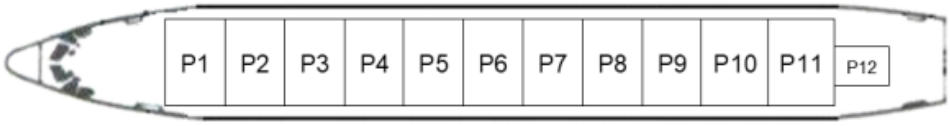

Configuration1: 11 x Lateral 125”/88” and 1 x 60.4”/61.5”

The following ULD type loading restrictions apply. The ULD type can be loaded on positions marked with a ‘Y’. The ULD type cannot be loaded on positions marked with a ‘N’.

		ULD Type								
	Pos	AAA	AAC	AAJ	AKE	LAK	LAY	PAG	RKN	RKE
Configuration 1	P1	Y	Y1	Y	N	Y	Y	Y	N	N
	P2	Y	Y1	Y	N	Y	Y	Y	N	N
	P3	Y	Y1	Y	N	Y	Y	Y	N	N
	P4	Y	Y1	Y	N	Y	Y	Y	N	N
	P5	Y	Y1	Y	N	Y	Y	Y	N	N
	P6	Y	Y1	Y	N	Y	Y	Y	N	N
	P7	Y	Y1	Y	N	Y	Y	Y	N	N
	P8	Y	Y1	Y	N	Y	Y	Y	N	N
	P9	Y	Y1	Y	N	Y	Y	Y	N	N
	P10	Y	Y1	Y	N	Y	Y	Y	N	N
	P11	Y	Y1	Y	N	Y	Y	Y	N	N
	P12	N	N	N	Y	N	N	N	Y	Y

Y1: Only AAC DHL serial range 9021 and above allowed

Note: Pallet stacks not allowed on position 11.

UNCONTROLLED DOCUMENT
UNCONTROLLED DOCUMENT

UNCONTROLLED DOCUMENT (28 NOVEMBER 2024 16:31:16)

13. Loading and Un-Loading

13.1 Un-Loading Sequence

Step 1: Un-load the aft lower deck.

Step 2: Un-load the ULDs on the main deck in the following numbered sequence, **and respect standard stage un-loading method**.

For registrations **ECIXO, ECNUG, ECNXU, ECOBQ**

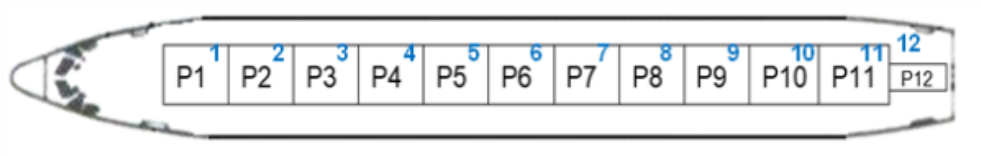

For registrations **ECOBN, ECNXV, ECNXX**

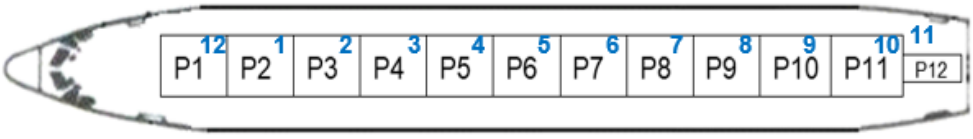

Step 3: Un-load the forward lower deck.

13.2 Loading Sequence

Step 1: Load the forward lower deck.

Step 2: Load the ULDs on the main deck in the following numbered sequence, **and respect standard stage loading method**.

For registrations **ECIXO, ECNUG, ECNXU, ECOBQ**

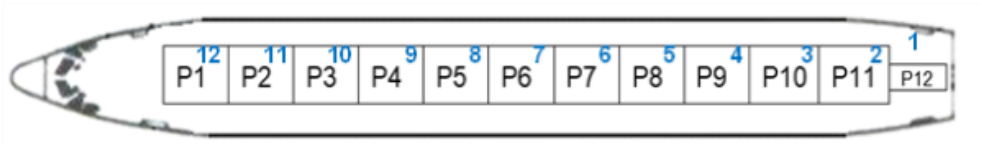

For registrations **ECOBN, ECNXV, ECNXX**

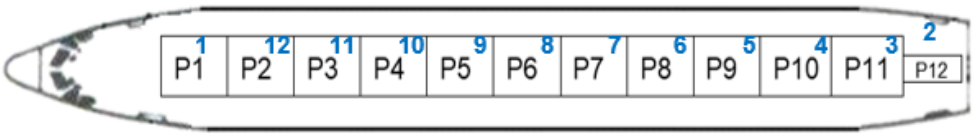

Step 3: Load the aft lower deck.

UNCONTROLLED DOCUMENT
UNCONTROLLED DOCUMENT

UNCONTROLLED DOCUMENT (28 NOVEMBER 2024 16:31:16)

UNCONTROLLED DOCUMENT

13.3 Loading Notes

13.3.1 Tail-Tipping

The B737-800SF is not susceptible to tail-tipping. Due care, however, must be taken whilst un-loading and loading the aircraft to prevent the Centre of Gravity moving to a position that would result in tail-tipping. Following the prescribed un-loading and loading sequence is therefore of paramount importance. Furthermore, care must be taken whilst loading the ULDs on the main-deck, moving them at a moderate pace up and down the aircraft to prevent a sudden CoG shift, which may result in a tail-tip situation.

13.3.2 Tail Post

This aircraft does not have a tail-post as an option.

13.3.3 ULD Clearance

There is very limited clearance between some ULDs and the inner roof lining on this aircraft. ULDs, AAA and AAC/LAY especially, which are even slightly out of contour will impact the roof lining and cause damage. Due care must therefore be exercised when un-loading and loading this aircraft.

13.3.4 Ballast ULD

If a ballast ULD is loaded on the aircraft, this shall not be removed by any member of staff unless they have received specific written instruction to do so from Swift Air.

13.3.5 Sliding Carpet

After un-loading, the Sliding Carpet should be fully retracted unless the hold will be loaded for an outbound flight. Prior to departure, the Sliding Carpet must be fully retracted. This procedure is to ensure the hold will be serviceable even if the Sliding Carpet should malfunction.

Note: It is prohibited for ground staff to detach the bulkhead assembly.

13.3.6 Accessing the main cargo door vent handle

Prior to opening the Main Cargo Door, the vent door must be opened by pulling down on the vent door handle. The Hi-Lo operator must approach the MCD to open the vent door handle. The Hi-Lo operator must then move the Hi-Lo clear of the fuselage to allow the MCD to open. Only then can the Hi-Lo operator manoeuvre the Hi-Lo into final position to start off-loading or loading.

UNCONTROLLED DOCUMENT

UNCONTROLLED DOCUMENT

UNCONTROLLED DOCUMENT (28 NOVEMBER 2024 16:31:16)

14. Rigid, Oversized and Special Loads

For guidance on the handling of special loads, please refer to the Special Loads Regional Contact Instructions outlined in Chapter 6 **6.12.22.3 - Determining Loadability of Special Loads**. Where direct operator approval is required, the Regional Airside Team will liaise with Global Airside as needed.

14.1 Floating / Heavy Pallets

ULDs which are heavier than the standard allowed maximum gross weight may be loaded on the main deck on a floating position.

Permission must be sought from the operator before accepting any ULDs which require loading on a floating position.

The permission, including a special loading instruction, will be granted only after all details concerning the load and the loading have been checked and clarified.

14.2 Crushable Cargo Requirements

Where Rigid Cargo has been identified, the first loaded position on the aircraft shall be loaded with Crushable Cargo ULDs suitable for protecting the barrier wall against unrestrained Rigid Cargo.

When carrying rigid cargo weighing a total of 10,000 lb or more, the first two loaded positions must be loaded with Crushable Cargo ULDs suitable for protecting the barrier wall against unrestrained Rigid Cargo.

14.3 Piercing Cargo

Piercing cargo may not be loaded on the first and last loaded position on the aircraft.

Loading of Piercing Cargo is not allowed in Positions P1, P11 and P12.

14.4 Aircraft Engines

Aircraft engines shall be loaded in positions P5-P6 only using a longitudinal 125”/96” engine pallet configuration.

The following engine types are loadable on this aircraft: CFM56-7, CFM56-3

Permission must be sought from your Special Loads Regional Contact before accepting aircraft engines.

14.5 Live Animals

14.5.1 Horses

When horses are carried, horse attendants may be required to ensure the safety of the flight.

UNCONTROLLED DOCUMENT
UNCONTROLLED DOCUMENT

UNCONTROLLED DOCUMENT (28 NOVEMBER 2024 16:31:16)

UNCONTROLLED DOCUMENT

14.5.2 Other Live Animals

The following table provides a list of commonly transported animals. If there is a requirement to transport animals not listed below, contact your Special Loads Regional contact.

	Main-Deck	FWD Hold	AFT Hold
Horses	Yes*	No	
Day-old chickens	Yes		
Monkeys	X		
Pigs	X		
Cattle	X		
Sheep or Goats	X	X	
Dogs or Cats	Yes		
Small mammals or Birds	X		
Tropical Fish	X		
Reptiles or Amphibians	X		
Eels	Yes		
Crustaceans or Molluscs	Yes		
Bees	Yes		
Hatching eggs	Yes		
Insects	Yes		

* Limited due to air conditioning and accessibility. Only the first container can be accessible, therefore carrying multiple horse containers is only possible if horse containers can be walked through.

X: Depends on accessibility, air conditioning and flight duration. Contact your Special Loads Regional contact for more details.

UNCONTROLLED DOCUMENT

UNCONTROLLED DOCUMENT

UNCONTROLLED DOCUMENT (28 NOVEMBER 2024 16:31:16)

15. Restricted Commodities Loading

15.1 Radioactive (RRY), Magnetised (MAG) and Cargo Aircraft Only (CAO)

The following Dangerous Good type loading restrictions apply. The Dangerous Good type can be loaded on positions marked with a 'Y'. The Dangerous Good type cannot be loaded on positions marked with a 'N'.

	Position													
DGType	P1	P2	P3	P4	P5	P6	P7	P8	P9	P10	P11	P12	FWD	AFT
MAG	N	N	N	N	N	N	N	N	N	N	Y	N	N	N
CAO	Y	Y	Y	Y	Y	Y	Y	Y	Y	Y	Y	Y	Y	Y
RRY (max. 50 TI	N	N	Y	Y	Y	Y	Y	Y	Y	Y	Y	Y	N	N
RRY (max. 200 TI	N	N	N	N	Y	Y	Y	Y	Y	Y	Y	Y	N	N

Note: Cargo Aircraft Only (CAO) can be loaded on any Main Deck position to P12 provided they are loaded accessible. Accessible means that:

- The CAO is loaded on a pallet
- All positions forward of the CAO are loaded with 88" pallets with aisle

15.2 Dry Ice

Please see the Global Supplementary Operational Document **Dry Ice Consolidation Table** for the current maximum allowed Dry Ice limits.

Dry Ice (ICE) and Live Animals (AVI)

There is no weight limit for the loading of Dry Ice (ICE) together with Live Animals (AVI) on the Main-deck.

15.3 Lithium Batteries

Please see the Global Supplementary Operational Document **Lithium Battery Loadability Consolidation Table** for the current UN3480 Section IA/IB (RBI), UN3090 Section IA/IB (RBM), UN3481 Section I (RLI), UN3091 Section I (RLM) load ability limits.

UNCONTROLLED DOCUMENT
UNCONTROLLED DOCUMENT

UNCONTROLLED DOCUMENT (28 NOVEMBER 2024 16:31:16)

UNCONTROLLED DOCUMENT

16. Messaging and Reporting

16.1 Messaging

Standard messaging rules apply.

16.2 Reporting

Standard reporting rules apply.

UNCONTROLLED DOCUMENT

UNCONTROLLED DOCUMENT

UNCONTROLLED DOCUMENT (28 NOVEMBER 2024 16:31:16)

UNCONTROLLED DOCUMENT

17. Load Control Data

17.1 Standard Mass Additions

17.1.1 Additional Crew Members (ACM)

Maximum Number of ACMs:	4
Mass of ACM:	85 kg

17.1.2 Fly Away Kit (FAK) and Ballast

Fly Away Kit (FAK): 260kg Comp.1 not included in the DOM/DOI

Note: As a standard above, mentioned weights have to be used. If operator (or maintenance provider) adds or removes parts resulting in weight adjustments to the FAK or ballast, the overall responsibility shall be to the operator and their OCC to inform the respective station by email notification. However, it is also the responsibility of the ramp supervisor to verify on every flight and report major visible discrepancies to NCG.

Ballast: Not standard, but often required for ferry flights and then to be planned as additional weight as not included in the DOW/DOI.

Above or adjusted weights must be added in Sable and on the Load Plan by Load Control for every flight and verified by the Ramp Team.

17.1.3 Minimum Fuel and Standard Taxi Fuel

Minimum Fuel:	Not Applicable
Standard Taxi Fuel:	150kg to 300kg (it depends on the airport operation)

17.2 LMC Restrictions

Computer Loadsheet Maximum LMC:	+/- 200 kg
Manual Loadsheet Maximum LMC:	+/- 500 kg

17.3 Minimum Flight Weight

N/A

UNCONTROLLED DOCUMENT

UNCONTROLLED DOCUMENT (28 NOVEMBER 2024 16:31:16)

UNCONTROLLED DOCUMENT

18. Maximum Package Dimensions

18.1 Main Cargo Door

MAIN CARGO COMPARTMENT MAXIMUM ALLOWABLE PACKAGE SIZES - SIDE CARGO DOOR												
HEIGHT IN.	WIDTH IN.											
	10	20	30	40	50	60	70	80	88	100	108	125
	LENGTH IN.											
82	320	260	220	180	150	130	*	*	*	*	*	*
80	350	290	240	190	180	160	*	*	*	*	*	*
70	540	400	320	260	220	200	170	130	*	*	*	*
60	650	520	400	320	260	230	200	170	160	140	130	*
50	650	650	480	370	300	260	230	200	180	160	130	125
40	650	650	480	370	300	260	230	200	180	160	130	125
30	650	650	500	380	320	260	230	200	190	165	130	125
20	650	650	500	380	320	260	230	200	190	165	130	125
10	650	650	500	380	320	270	235	210	190	165	130	125
5	650	650	500	380	320	270	235	210	190	165	130	125

Height including ULD

18.2 Forward Lower-deck Hold.

HEAVY PACKAGES LIFT ASSISTED										
HEIGHT IN.	WIDTH IN.									
	5	10	15	20	25	30	35	40	45	48
	LENGTH IN.									
34	124	114	104	94	84	74	64	54	50	45
32	124	114	104	94	84	74	64	54	50	45
30	124	114	104	94	84	74	64	54	50	45
28	124	114	104	94	84	74	64	54	50	45
26	124	114	104	94	84	74	64	54	50	45
24	124	114	104	94	84	74	64	54	50	45
22	124	114	104	94	84	74	64	54	50	45
20	125	114	104	94	84	74	64	54	50	45
18	125	114	104	94	84	74	64	54	50	45
16	126	114	104	94	84	74	64	54	50	45
14	127	114	104	94	84	74	64	54	50	45
12	129	115	104	94	84	74	64	54	50	45
10	131	116	104	94	84	74	64	54	50	45
5	156	120	105	94	84	74	64	54	50	45

UNCONTROLLED DOCUMENT (28 NOVEMBER 2024 16:31:16)

LIGHT PACKAGES HAND MANEUVERED[a]										
HEIGHT IN.	WIDTH IN.									
	5	10	15	20	25	30	35	40	45	48
	LENGTH IN.									
34	112	100	90	81	73	67	61	57	54	53
32	131	116	104	94	85	77	71	66	63	62
30	150	131	117	105	95	87	80	74	71	69
28	168	147	124	116	105	95	88	82	77	76
26	188	161	142	126	113	103	94	88	83	81
24	210	177	154	137	122	111	101	94	89	87
22	231	194	167	147	131	118	108	100	94	91
20	254	210	180	157	139	125	114	105	98	96
18	273	228	193	167	147	132	119	110	102	100
16	274	247	206	177	158	139	125	114	106	103
14	275	267	220	188	169	145	130	119	110	107
12	277	273	233	197	171	151	135	123	113	110
10	277	274	250	210	181	159	142	129	118	112
5	280	276	273	242	205	178	158	142	130	116

[a] Package length is limited to a maximum of 205 inches when transverse cargo nets are installed.

18.3 Aft Lower-deck Hold.

HEAVY PACKAGES LIFT ASSISTED										
HEIGHT IN.	WIDTH IN.									
	5	10	15	20	25	30	35	40	45	48
	LENGTH IN.									
34	70	60								
32	99	89	79	70	60	49				
31	122	112	102	92	82	72	62	52	43	43
30	122	112	102	92	82	72	62	52	43	43
28	122	112	102	92	82	72	62	52	43	43
26	122	112	102	92	82	72	62	52	43	43
24	122	112	102	92	82	72	62	52	43	43
22	122	112	102	92	82	72	62	52	43	43
20	123	112	102	92	82	72	62	52	43	43
18	124	112	102	92	82	72	62	52	43	43
16	125	112	102	92	82	72	62	52	43	43
14	127	112	102	92	82	72	62	52	43	43
12	129	113	102	92	82	72	62	52	43	43
10	138	117	103	92	82	72	62	52	43	43
5	164	130	108	92	82	72	62	52	43	43

UNCONTROLLED DOCUMENT
UNCONTROLLED DOCUMENT

UNCONTROLLED DOCUMENT (28 NOVEMBER 2024 16:31:16)

UNCONTROLLED DOCUMENT

LIGHT PACKAGES HAND MANEUVERED[a]										
HEIGHT IN.	WIDTH IN.									
	5	10	15	20	25	30	35	40	45	48
	LENGTH IN.									
34	89	77	66	58	52	[b]	[b]	[b]	[b]	[b]
32	124	108	93	82	72	64	57	52	49	49
30	160	140	123	110	99	89	81	75	70	67
28	176	152	133	118	105	94	85	78	73	70
26	201	171	148	130	116	104	94	86	80	76
24	228	189	162	142	126	113	102	93	87	82
22	247	206	177	152	134	120	108	99	92	88
20	275	225	191	166	147	128	116	105	97	92
18	338	242	206	176	155	135	122	111	102	97
16	339	265	220	188	164	143	128	116	106	100
14	340	293	238	201	174	153	134	121	111	104
12	341	338	253	212	182	160	143	130	119	107
10	343	339	273	226	190	166	148	133	122	110
5	345	340	337	268	221	188	163	144	131	120

UNCONTROLLED DOCUMENT

UNCONTROLLED DOCUMENT

The remainder of this page is intentionally left blank.

UNCONTROLLED DOCUMENT (28 NOVEMBER 2024 16:31:16)