UNCONTROLLED DOCUMENT

UNCONTROLLED DOCUMENT

SWT B752PCF/PF
Swiftair B757-200PCF/PF

Revision: 4
Date: 17 December 2024

1 Swift Air B757-200PCF/PF Registrations
2 Aircraft Dimensions
3 Aircraft Servicing Points and Specifications
4 Ground Support Equipment
5 Standard Turnaround Times
6 Safety Areas
7 Strong Wind Conditions
8 Aircraft Door Dimensions
9 Compartment Classification and Air-Conditioning
10 Aircraft Cabin Contour Dimensions
11 Maximum Position Weights
12 Aircraft ULD Compatibility
13 Loading and Un-Loading
14 Rigid, Oversized and Special Loads
15 Restricted Commodities Loading
16 Messaging and Reporting
17 Load Control Data
18 Maximum Package Dimensions

UNCONTROLLED DOCUMENT (17 DECEMBER 2024 13:21:25)

Page	Date	Comment
15	17 December 2024	ULD loading restriction removed for AAC serial ranges below 9021, these are no longer available in the network. *(Minor)*

UNCONTROLLED DOCUMENT

UNCONTROLLED DOCUMENT

UNCONTROLLED DOCUMENT

1. Swift Air B757-200PCF/PF Registrations

IATA Designator:	**WT**
ICAO Designator:	**SWT**
Valid for:	B752PCF: **ECNIV, ECNIU**
	B752PF: **ECNQJ**

UNCONTROLLED DOCUMENT

UNCONTROLLED DOCUMENT

UNCONTROLLED DOCUMENT (17 DECEMBER 2024 13:21:25)

2. Aircraft Dimensions

All dimensions are in meters.

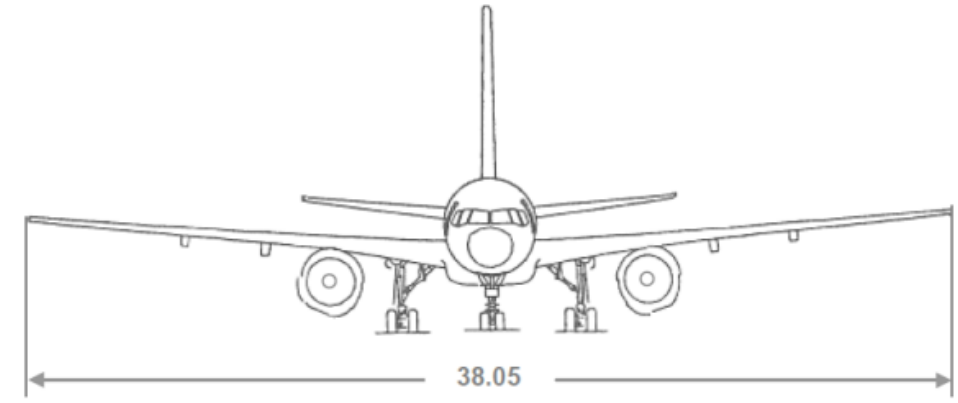

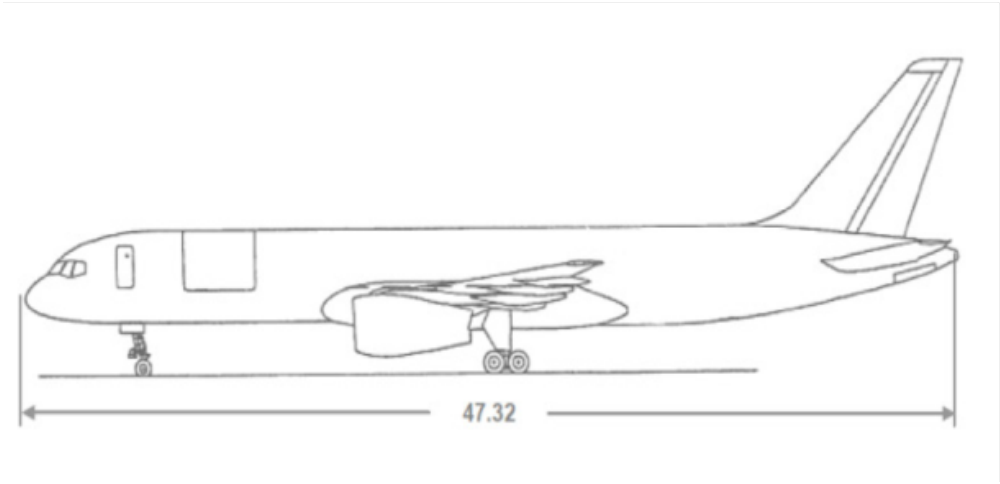

UNCONTROLLED DOCUMENT
UNCONTROLLED DOCUMENT

UNCONTROLLED DOCUMENT (17 DECEMBER 2024 13:21:25)

UNCONTROLLED DOCUMENT

3. Aircraft Servicing Points and Specifications

3.1 Servicing Points

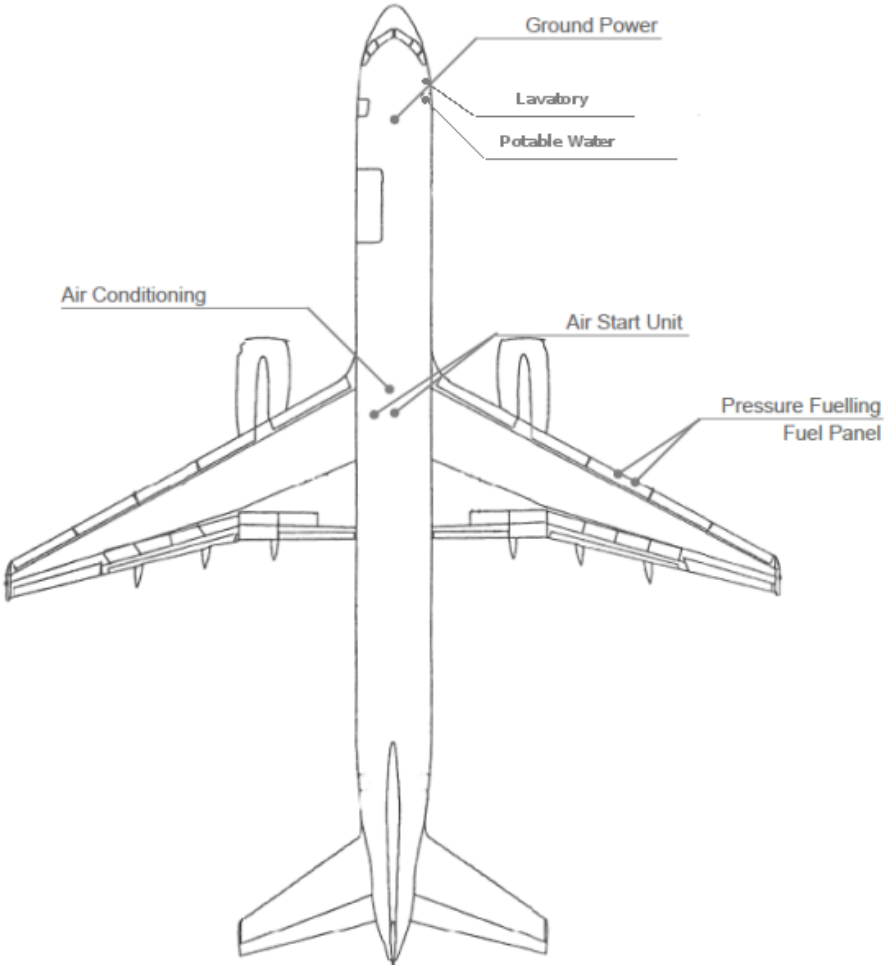

3.2 Servicing Specifications

System	Requirements	Notes
Ground Power Unit	115/200V AC / 90 kVA / 400 Hz	1 GPU connection available
Fuel	Jet A1	Fuel control panel on **RH wing only**
Air Condition Unit	Maximum Flow Rate 225 ppm	1 ACU inlet available
Air Start Unit	Minimum Capacity 226 ppm Max / Min pressure: 60 / 40 psi	2 ASU inlets available. 2 ASUs may be required, depending on flow rate and ambient air temperature.

UNCONTROLLED DOCUMENT (17 DECEMBER 2024 13:21:25)

UNCONTROLLED DOCUMENT

4. Ground Support Equipment

4.1 Positioning of GSE

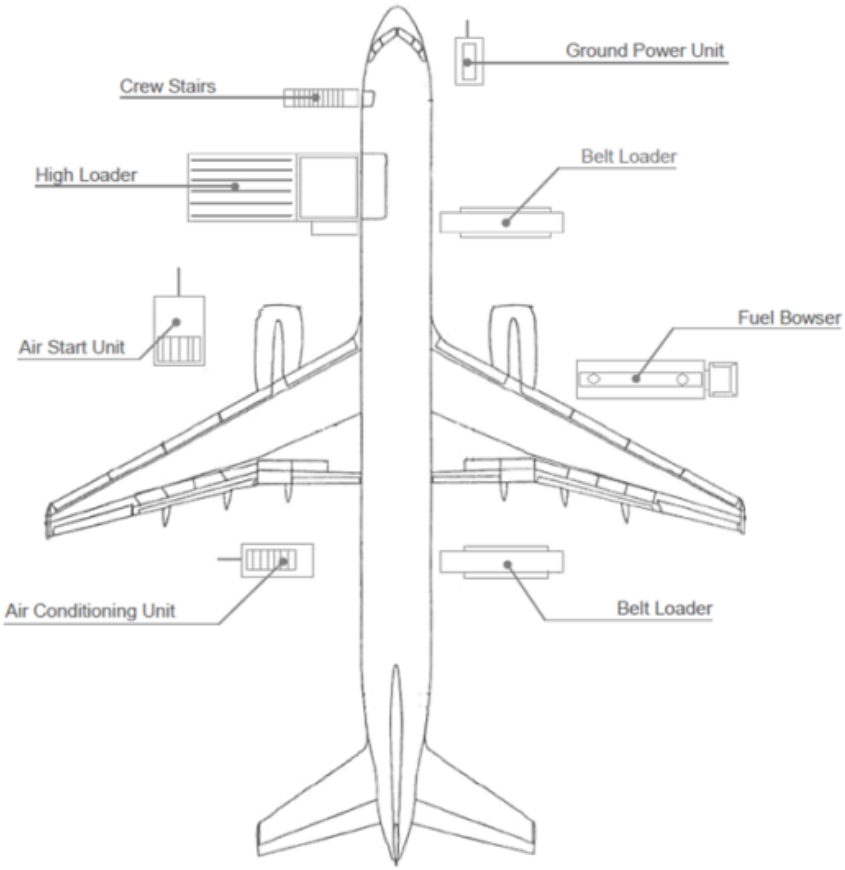

4.2 GSE Requirements

GSE	Type	Quantity
High Loader	Main –deck	1
Ground Power Unit	Diesel. Electric or Fixed	1
Crew Stairs	Platform height 378cm – 401cm	1
Belt Loader	Standard (30 ft. recommended	2
Tractor	Diesel or Electric	3
Dolly wagons	125”/88” and or 125”/96” capable	Up to 15
Belly Container / Wagon	As required	According to load

UNCONTROLLED DOCUMENT (17 DECEMBER 2024 13:21:25)

UNCONTROLLED DOCUMENT

5. Standard Turnaround Times

Turn-around time for a transit stop: 00:45 hour (partial off- and on-load)
Turn-around time for an end stop: 01:00 hour (full off- and on-load)

Note: For airports where the aircraft will power-off stand using engine power, add 3 minutes to the turn-around times listed above.

UNCONTROLLED DOCUMENT

UNCONTROLLED DOCUMENT

UNCONTROLLED DOCUMENT (17 DECEMBER 2024 13:21:25)

UNCONTROLLED DOCUMENT

6. Safety Areas

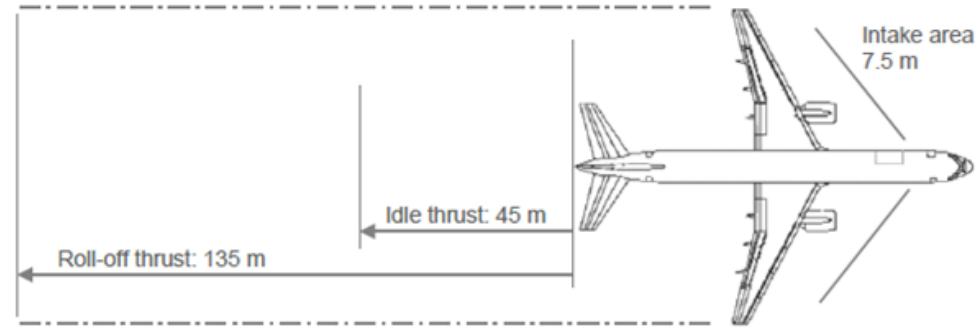

UNCONTROLLED DOCUMENT

UNCONTROLLED DOCUMENT

UNCONTROLLED DOCUMENT (17 DECEMBER 2024 13:21:25)

UNCONTROLLED DOCUMENT

7. Strong Wind Conditions

If the wind conditions on the ramp reach the following speeds, the corresponding actions shall be taken.

Wind Speed	Action
Up to 25 knots	Normal Operations: All doors can be opened and left in fully open position
More than 25 knots	Normal Operations: All doors can be opened and left in canopy position*
More than 45 knots	Do not operate the main deck cargo door.

Notes:

* Since there is no indication for Canopy position it is defined as follows: Door position where an imaginary horizontal line between the door hinge lower edge is formed parallel to the ground +/-20 degrees.

The cargo door shall be in the closed and locked position for towing, taxiing and jacking of the aircraft. Do not open or operate the door if the actual or anticipated wind velocity or gust exceeds the prescribed limits. Severe structural damage to the door and/or the aircraft may result.

UNCONTROLLED DOCUMENT

UNCONTROLLED DOCUMENT

UNCONTROLLED DOCUMENT (17 DECEMBER 2024 13:21:25)

8. Aircraft Door Dimensions

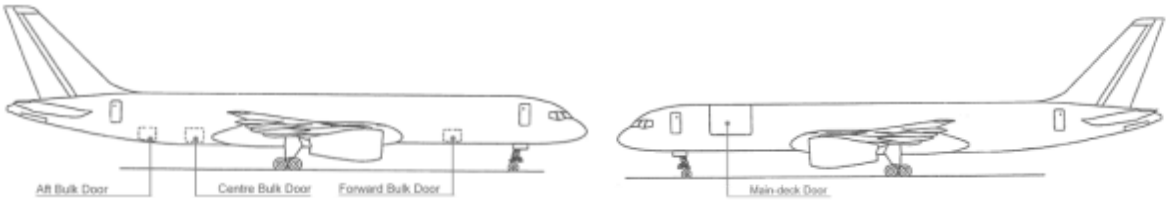

Door width, height, and sill height are defined as follows.

(This drawing is for illustration purposes only and may not be an exact representation of this aircraft type)

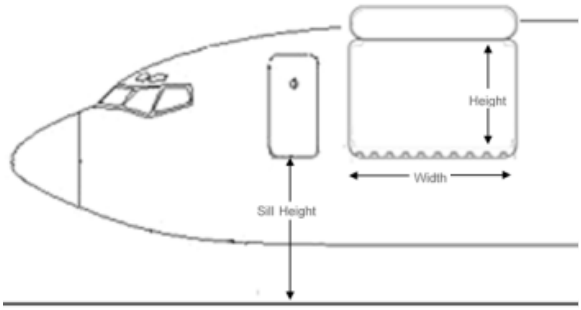

All dimensions are in centimetres.

Door	Door Width	Door Height	Min. Door Sill Height	Max. Door Sill Height
Crew Door	-	-	379	401
Main Deck	345	216	381	401
Forward Bulk	140	107	246	267
Aft Bulk	140	114	236	251

UNCONTROLLED DOCUMENT
UNCONTROLLED DOCUMENT

UNCONTROLLED DOCUMENT (17 DECEMBER 2024 13:21:25)

UNCONTROLLED DOCUMENT

9. Compartment Classification and Air-Conditioning

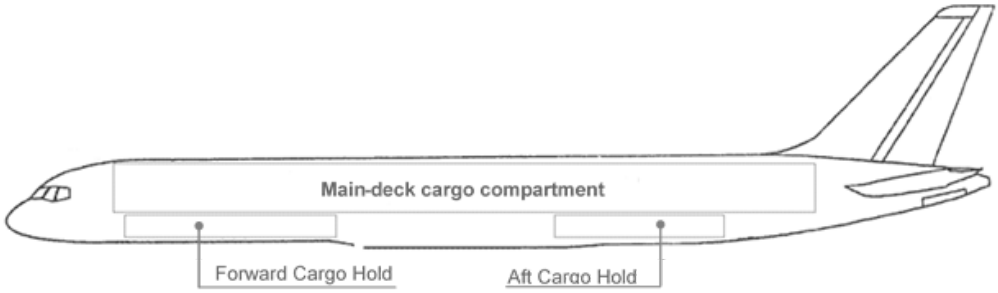

9.1 Compartment Classification

Compartment		Features
Main-deck	Position 1 loaded with 125"/88" ULD **with** 50 cm (18") aisle.	- Classification **E**
		- Pressurisation
		- Smoke Detection
		- Accessible during flight
	Position 1 loaded with 125"/88 and ULD **without 50 cm (18")** access aisle.	- Classification **E**
		- Pressurisation
		- Smoke Detection
		- In-accessible during flight
Lower Deck Compartment All Holds		- Classification **C**
		- Pressurisation
		- Smoke Detection
		- **In-accessible** during flight
		-Fire Suppression

9.2 Air-Conditioning

	Main Deck	FWD Lower Hold*	AFT Lower Hold*
Temperature	18°C to 30°C Heated and adjustable	10°C to 21°C Heated non-adjustable	10°C to 21°c Heated non-adjustable
Heating	Yes	Yes	
Heat Adjust	Yes	No	
Cooling	Yes	No	
Ventilation	Yes	From Main Deck Leakage Only	

UNCONTROLLED DOCUMENT (17 DECEMBER 2024 13:21:25)

10. Aircraft Cabin Contour Dimensions

10.1 Aircraft Layout

The aircraft is divided into three contour zones: CI, CII and CIII. Note that all heights given in the below Contour diagrams are **from the top of rollers**.

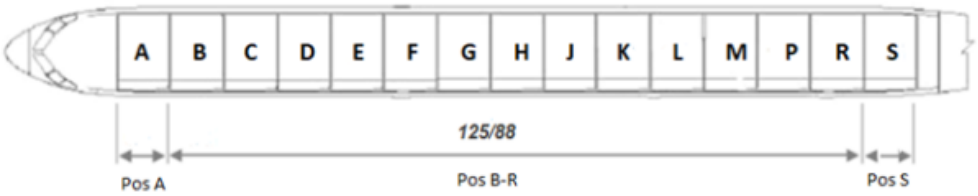

10.2 Contour CI (Pos A)

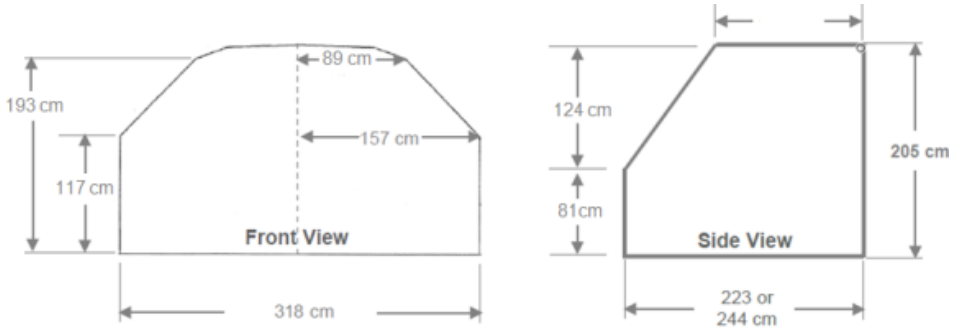

10.3 Contour CII (Pos B -R)

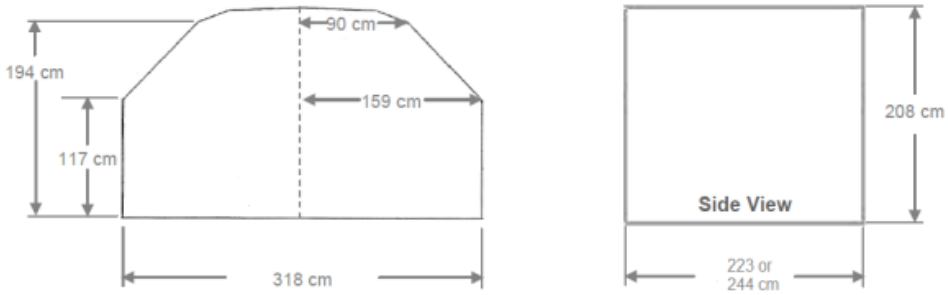

UNCONTROLLED DOCUMENT (17 DECEMBER 2024 13:21:25)

UNCONTROLLED DOCUMENT

10.4 Contour CIII (Pos S)

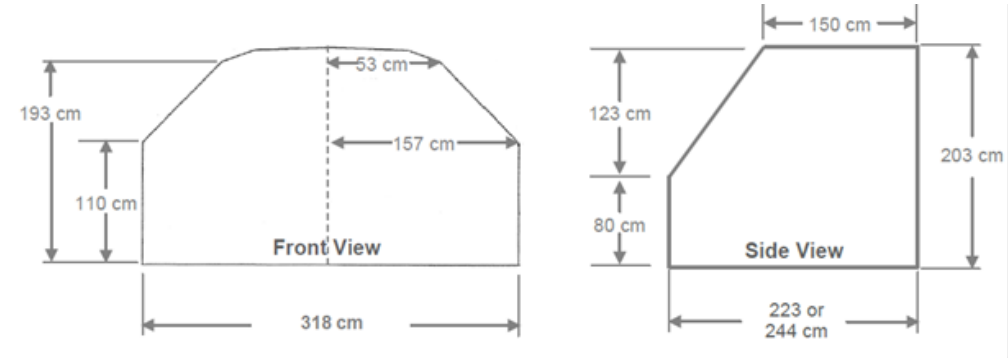

UNCONTROLLED DOCUMENT

UNCONTROLLED DOCUMENT

UNCONTROLLED DOCUMENT (17 DECEMBER 2024 13:21:25)

UNCONTROLLED DOCUMENT

11. Maximum Position Weights

11.1 Maximum Main-deck ULD Weights

Maximum weights in Kgs.

	ULD Position														
ULD Size	A	B	C	D	E	F	G	H	J	K	L	M	P	R	S
125”/ 88”	2716	2948						4264		2948					

Valid for Registration: ECNQJ:

	ULD Position														
ULD Size	A	B	C	D	E	F	G	H	J	K	L	M	P	R	S
125”/ 88”	3401							4263		2948					

11.2 Maximum Lower-deck Compartment Weights

Maximum weights in Kgs.

	Forward hold		Aft hold	
Compartment	1	2	3	4
Max. Weight	2469	4672	3773	5606
	4672		7393	
Volume (m3)	5.21	14.58	14.24	16.19

Note: The compartment volumetric capacity in the lower holds of the B757PCFs are approximately equivalent to 3 LAY ULDs and 1 AKE ULD, all 80% volumetrically filled.

UNCONTROLLED DOCUMENT (17 DECEMBER 2024 13:21:25)

12. Aircraft ULD Compatibility

12.1 Aircraft Configurations

The loading combinations shown here are examples only. More combinations are possible. Full information covering possible loading combinations, and how they interact, can be found in the Sable system.

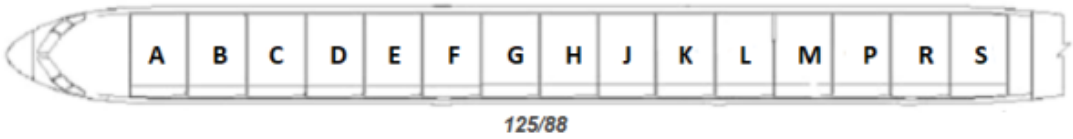

Configuration: 15 Lateral 125”/88” positions.

Valid for Registration: ECNQJ:

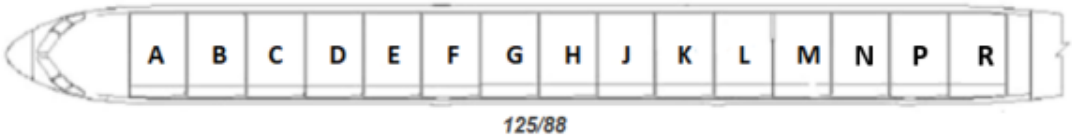

Configuration: 15 Lateral 125”/88” positions.

UNCONTROLLED DOCUMENT
UNCONTROLLED DOCUMENT

UNCONTROLLED DOCUMENT (17 DECEMBER 2024 13:21:25)

12.2 ULD Compatibility Table

The following ULD type loading restrictions apply. The ULD type can be loaded on positions marked with a 'Y'. The ULD type cannot be loaded on positions marked with a 'N'.

Note: Position naming convention differs for registration ECNQJ, all ULD compatibilities remain the same.

		ULD Type			
	Pos	AAA	AAC/ LAY	AAJ/ LAK	PAG/ PAJ
Configuration 1	A	Y	Y	Y	Y
	B	Y	Y	Y	Y
	C	Y	Y	Y	Y
	D	Y	Y	Y	Y
	E	Y	Y	Y	Y
	F	Y	Y	Y	Y
	G	Y	Y	Y	Y
	H	Y	Y	Y	Y
	J	Y	Y	Y	Y
	K	Y	Y	Y	Y
	L	Y	Y	Y	Y
	M	Y	Y	Y	Y
	P	Y	Y	Y	Y
	R	Y	Y	Y	Y
	S	N	Y1	Y	Y

Y1: All LAY and AAC serial range 9346-9410, 9731-9995 allowed.

Notes: No Pallet stacks not allowed on the first and/or last positions on the main deck.

Care must be exercised loading AAA and AAC/LAY ULDs, to prevent out-of-gauge ULDs impacting the roof or sidewall lining.

Where ULDs have sloped contours on the lateral side (front/back), the sloped side shall face forward for positions **A-R** (ECNQJ **A-P**) and Aft in position **S** (ECNQJ **R**).

UNCONTROLLED DOCUMENT
UNCONTROLLED DOCUMENT

UNCONTROLLED DOCUMENT (17 DECEMBER 2024 13:21:25)

UNCONTROLLED DOCUMENT

13. Loading and Un-Loading

13.1 Un-Loading Sequence

Step 1: Un-load the aft lower deck.

Step 2: Un-load the ULDs on the main deck in the following numbered sequence, and respect standard step un-loading method:



Step 3: Un-load the forward lower deck.

13.2 Loading Sequence

Step 1: Load the forward lower deck.

Step 2: Load the ULDs on the main deck in the following numbered sequence, and respect standard step un-loading method:

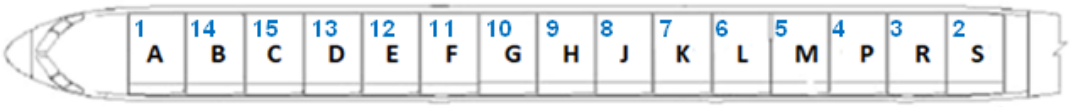

Step 3: Load the aft lower deck.

13.3 Loading Notes

13.3.1 Counter-ballast

To provide counterbalance during loading and offloading, a minimum of 1.000 kg is required in Position A for load in excess of 10.000 kg. Below that figure, a minimum of 10% of the load must be Position 1 to provide counterbalance.

If carrying light CAO ULDs, it is allowed to combine Position A and Compartment 1 & 2 to comply with minimum counterbalance requirement.

Note: This is a loading only and only applies during the loading and offloading process.

13.3.2 Simultaneous Loading and Un-loading of Lower-deck Holds

Due to the inherent stability of this aircraft, simultaneous loading and/or un-loading of all lower-deck holds, using up to 2 belt-loaders, is allowed. If this procedure is being used, it must be ensured that Position A, or Position A and Hold 1&2, is/are always loaded with a minimum of (or no less than) 1000kg.

UNCONTROLLED DOCUMENT (17 DECEMBER 2024 13:21:25)

UNCONTROLLED DOCUMENT

13.3.3 Lower Lobe Cargo Door Switch Malfunction

The door is supposed to stop in any position when the switch is released. However, it has been known to fail, and continue to close after the control switch is released.

The switch is located in the external control panel aft of each cargo door

Ramp personnel must be aware of this potential situation. They shall:

- Position themselves clear of the door path when operating the door
- Ensure that the door stops moving after releasing the control switch, before moving into the door path area.

Remainder of this page internationally left blank

UNCONTROLLED DOCUMENT

UNCONTROLLED DOCUMENT

UNCONTROLLED DOCUMENT (17 DECEMBER 2024 13:21:25)

UNCONTROLLED DOCUMENT

14. Rigid, Oversized and Special Loads

For guidance on the handling of special loads, please refer to the Special Loads Regional Contact Instructions outlined in Chapter 6 **6.12.22.3 - Determining Loadability of Special Loads**. Where direct operator approval is required, the Regional Airside Team will liaise with Global Airside as needed.

14.1 Floating / Heavy Pallets

Floating Pallets are not permitted on these aircraft.

14.2 Crushable Cargo Requirements

The first loaded position on the aircraft must be occupied with a ULD filled with crushable cargo.

Where Rigid Cargo has been identified, the first loaded position on the aircraft shall be loaded with Crushable Cargo ULDs suitable for protecting the barrier wall against unrestrained Rigid Cargo.

14.3 Piercing Cargo

Piercing cargo may not be loaded on the first and last loaded position on the aircraft.

14.4 Aircraft Engines

The following aircraft engines are loadable on B757-200 PCF.

Engine Type	Loaded on	Allowed Loading positions	Loading direction
BR710 BR715 CFM56-2	96” Pallet	Flying Load Master may be required before aircraft engine will be accepted for transport	Not important
CFM56-3 CFM56-5 CFM-56-7 V2500			
JT3 JT8			

Note: Floating pallets are not allowed.

UNCONTROLLED DOCUMENT (17 DECEMBER 2024 13:21:25)

UNCONTROLLED DOCUMENT

14.5 Live Animals

14.5.1 Horses

No restrictions are in place, contact your Special Loads Regional Contact for further information.

14.5.2 Other Live Animals

The following table provides a list of commonly transported animals. If there is a requirement to transport animals not listed below, contact your Special Loads Regional Contact.

<table>
<tr><th></th><th>Main-Deck</th><th>Forward hold</th><th>Aft hold</th></tr>
<tr><td>Day-old chickens</td><td>Yes (max 2 pallets)</td><td rowspan="12">Yes</td><td rowspan="6">No</td></tr>
<tr><td>Monkeys</td><td rowspan="11">Yes</td></tr>
<tr><td>Pigs</td></tr>
<tr><td>Cattle</td></tr>
<tr><td>Sheep or Goats</td></tr>
<tr><td>Dogs or Cats</td></tr>
<tr><td>Small mammals or birds</td></tr>
<tr><td>Topical Fish</td></tr>
<tr><td>Reptiles or Amphibians</td></tr>
<tr><td>Eels</td><td>Yes</td></tr>
<tr><td>Crustaceans or Molluscs</td><td>Yes</td></tr>
<tr><td>Bees</td><td>No</td></tr>
<tr><td>Hatching eggs</td><td>Yes</td></tr>
</table>

Remainder of this page internationally left blank

UNCONTROLLED DOCUMENT (17 DECEMBER 2024 13:21:25)

15. Restricted Commodities Loading

15.1 Radioactive (RRY), Magnetised (MAG) and Cargo Aircraft Only (CAO)

The following Dangerous Good type loading restrictions apply. The Dangerous Good type can be loaded on positions marked with a 'Y'. The Dangerous Good type cannot be loaded on positions marked with a 'N'.

	Position																
DG Type	A	B	C	D	E	F	G	H	J	K	L	M	P	R	S	FWD LD	AFT LD
MAG	N	N	N	N	N	N	N	N	N	Y	Y	Y	Y	Y	Y	N	Y
CAO	Y	Y	Y	Y	Y	Y	Y	Y	Y	Y	Y	Y	Y	Y	Y	N	N
RRY (max. 50 TI combined)	N	N	N	Y	Y	Y	Y	Y	Y	Y	Y	Y	Y	Y	Y	N	Y
RRY (max. 200 TI combined)	N	N	N	N	Y	Y	Y	Y	Y	Y	Y	Y	Y	Y	Y	N	N

Note: Cargo Aircraft Only (CAO) can be loaded on any Main Deck position A to S provided they are loaded accessible. Accessible means that:

- The CAO is loaded on a pallet
- All positions forward of the CAO are loaded with 125"/88" pallets with aisle

15.2 Dry Ice

Please see the Global Supplementary Operational Document **Dry Ice Consolidation table** for the current maximum allowed Dry Ice limits.

15.2.1 Dry Ice (ICE) and Live Animals (AVI)

There is no additional weight limit for the loading of Dry Ice (ICE) together with Live Animals (AVI) on the Main-deck.

15.3 Lithium Batteries

Please see the Global Supplementary Operational Document **Lithium Battery Loadability Consolidation Table** for the current UN3480 Section IA/IB (RBI), UN3090 Section IA/IB (RBM), UN3481 Section I (RLI), UN3091 Section I (RLM) load ability limits.

UNCONTROLLED DOCUMENT
UNCONTROLLED DOCUMENT

UNCONTROLLED DOCUMENT (17 DECEMBER 2024 13:21:25)

UNCONTROLLED DOCUMENT

16. Messaging and Reporting

16.1 Messaging

Standard messaging rules apply.

16.2 Reporting

Standard reporting rules apply

UNCONTROLLED DOCUMENT

UNCONTROLLED DOCUMENT

UNCONTROLLED DOCUMENT (17 DECEMBER 2024 13:21:25)

17. Load Control Data

17.1 Standard Mass Additions

17.1.1 Additional Crew Members (ACM)

Maximum Number of ACMs:	4 (3 on ECNQJ)
Mass of ACM:	85 kg

17.1.2 Fly Away Kit (FAK) and Ballast

FAK and Ballast are not carried as standard on this aircraft.

17.2 Minimum Fuel and Standard Taxi Fuel

Minimum Fuel:	2000 kg
Standard Taxi Fuel:	500 kg

17.3 LMC Restrictions

Payload + Extra crew + Fuel < 1000 kg.

17.4 Minimum Flight Weight (MFW)

The Minimum Flight Weight is the minimum weight which the aircraft must maintain for the entire duration of a flight.

For empty or lightly loaded flights, physical ballast is required to reach the MFW.

The payload / ballast required to be loaded on an aircraft in order to maintain MFW can be calculated as the difference between the MFW and the Dry Operating Weight (DOW). The MFW and DOW can be found in **Aircraft Index and Classification**.

UNCONTROLLED DOCUMENT
UNCONTROLLED DOCUMENT

UNCONTROLLED DOCUMENT (17 DECEMBER 2024 13:21:25)

UNCONTROLLED DOCUMENT

18. Maximum Package Dimensions

18.1 Main Deck Cargo Door

Not presently available.

18.2 Forward Hold

HEAVY PACKAGES LIFT ASSISTED											
HEIGHT IN.	WIDTH IN.										
	5	10	15	20	25	30	35	40	45	50	55
	LENGTH IN.										
42	139	129	119	109	99	89	79	69	61	55	50
40	139	129	119	109	99	89	79	69	61	55	50
35	139	129	119	109	99	89	79	69	61	55	50
30	140	129	119	109	99	89	79	69	61	55	50
25	141	129	119	109	99	89	79	69	61	55	50
20	144	130	119	109	99	89	79	69	61	55	50
15	148	132	119	109	99	89	79	69	61	55	50
10	157	136	120	109	99	89	79	69	61	55	50
5	177	146	125	110	99	89	79	69	61	55	50

LIGHT PACKAGES HAND MANEUVERED											
HEIGHT IN.	WIDTH IN.										
	5	10	15	20	25	30	35	40	45	50	55
	LENGTH IN.										
40	151	139	129	119	109	99	89	79	70	63	57
35	192	172	156	144	134	123	113	103	92	83	76
30	239	207	184	166	152	140	130	119	109	98	89
25	290	243	210	186	168	153	141	131	120	108	98
20	290	243	210	186	168	153	141	131	120	108	98
15	290	243	210	186	168	153	141	131	120	108	98
10	290	243	210	186	168	153	141	131	120	108	98
5	290	243	210	186	168	153	141	131	120	108	98

UNCONTROLLED DOCUMENT

UNCONTROLLED DOCUMENT (17 DECEMBER 2024 13:21:25)

18.3 Aft Hold

HEAVY PACKAGES LIFT ASSISTED											
HEIGHT IN.	WIDTH IN.										
	5	10	15	20	25	30	35	40	45	50	55
	LENGTH IN.										
42	143	132	122	112	102	92	82	72	64	57	51
40	143	132	122	112	102	92	82	72	64	58	51
35	144	132	122	112	102	92	82	72	64	58	51
30	145	132	122	112	102	92	82	72	64	58	51
25	147	132	122	112	102	92	82	72	64	58	51
20	151	135	122	112	102	92	82	72	64	58	51
15	157	138	123	112	102	92	82	72	64	58	51
10	169	144	126	112	102	92	82	72	64	58	51
5	193	157	132	115	102	92	82	72	64	58	51

LIGHT PACKAGES HAND MANEUVERED											
HEIGHT IN.	WIDTH IN.										
	5	10	15	20	25	30	35	40	45	50	55
	LENGTH IN.										
42	160	146	134	124	114	104	94	84	75	67	60
40	175	158	144	134	124	113	103	93	83	75	67
35	216	190	170	154	142	131	121	111	100	90	82
30	245	224	196	175	158	145	134	124	113	102	93
25	246	245	220	193	172	156	144	133	121	110	100
20	246	245	220	193	172	156	144	133	121	110	100
15	246	245	220	193	172	156	144	133	121	110	100
10	246	245	220	193	172	156	144	133	121	110	100
5	246	245	220	193	172	156	144	133	121	110	100

Note:

To convert from inches to centimetres, multiply by 2.54

UNCONTROLLED DOCUMENT
UNCONTROLLED DOCUMENT

UNCONTROLLED DOCUMENT (17 DECEMBER 2024 13:21:25)