UNCONTROLLED DOCUMENT

UNCONTROLLED DOCUMENT

AWC/TMT A321PCF

Titan Airways A321PCF

Revision: 3
Date: 23 September 2024

1 Titan Airways A321PCF Registrations

2 Aircraft Dimensions

3 Aircraft Servicing Points and Specifications

4 Ground Support Equipment

5 Standard Turnaround Times

6 Safety Areas

7 Strong Wind Conditions

8 Aircraft Door Dimensions

9 Compartment Classification and Air-Conditioning

10 Aircraft Cabin Contour Dimensions

11 Maximum Position Weights

12 Aircraft ULD Compatibility

13 Loading and Un-Loading

14 Rigid, Oversized and Special Loads

15 Restricted Commodities Loading

16 Messaging and Reporting

17 Load Control Data

18 Maximum Package Dimensions

UNCONTROLLED DOCUMENT (23 SEPTEMBER 2024 13:59:57)

Page	Date	Comment
2	23 September 2024	Registration GPOWV removed. *(Minor)*
15	23 September 2024	ULD types no longer in the network removed. *(Minor)*
19	23 September 2024	Guidance on the handling of special loads information added. *(Minor)*

UNCONTROLLED DOCUMENT
UNCONTROLLED DOCUMENT

UNCONTROLLED DOCUMENT

1. Titan Airways A321PCF Registrations

IATA Designator: **ZT (Titan airways UK) & TM (Titan Airways Malta)**
ICAO Designator: **AWC (Titan airways UK) & TMT (Titan Airways Malta)**
Valid for: **9HZTB, 9HZTC, GPOWW,**

UNCONTROLLED DOCUMENT

UNCONTROLLED DOCUMENT

UNCONTROLLED DOCUMENT (23 SEPTEMBER 2024 13:59:57)

2. Aircraft Dimensions

All dimensions in meters and Feet/Inches

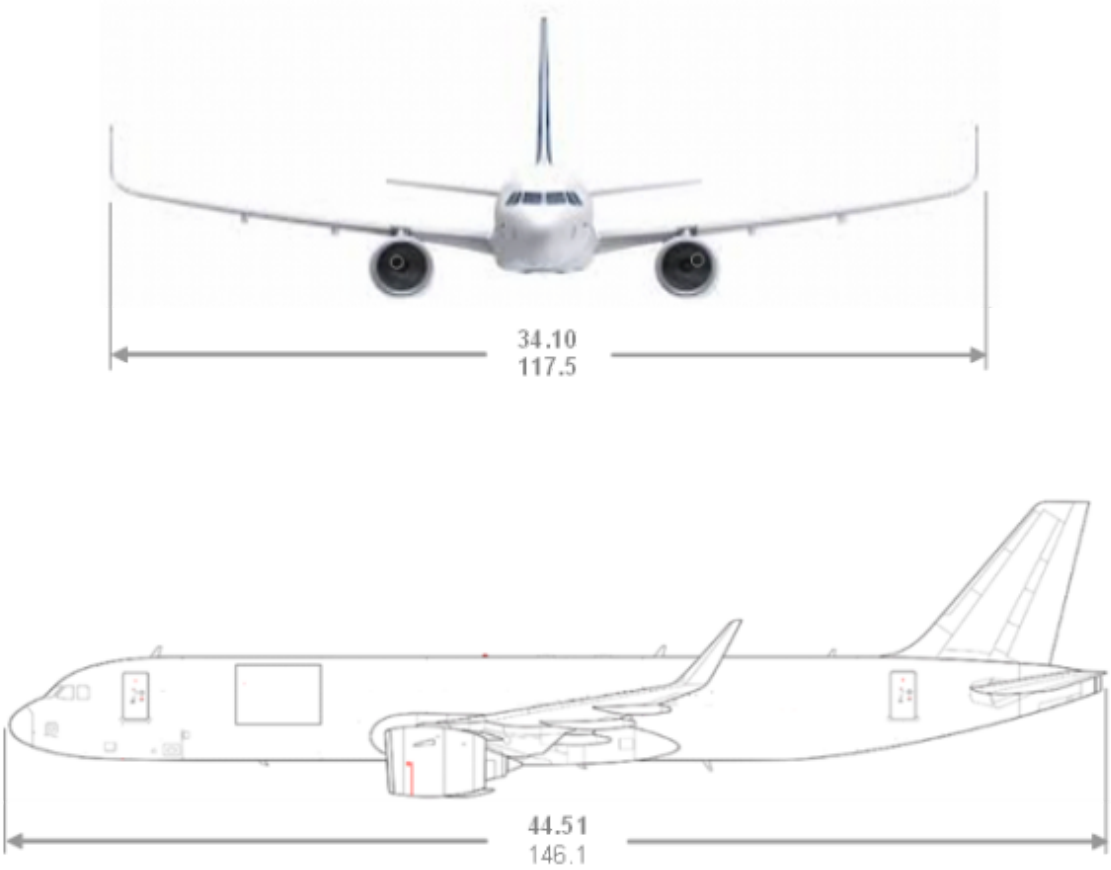

UNCONTROLLED DOCUMENT
UNCONTROLLED DOCUMENT

UNCONTROLLED DOCUMENT (23 SEPTEMBER 2024 13:59:57)

UNCONTROLLED DOCUMENT

3. Aircraft Servicing Points and Specifications

3.1 Servicing Points

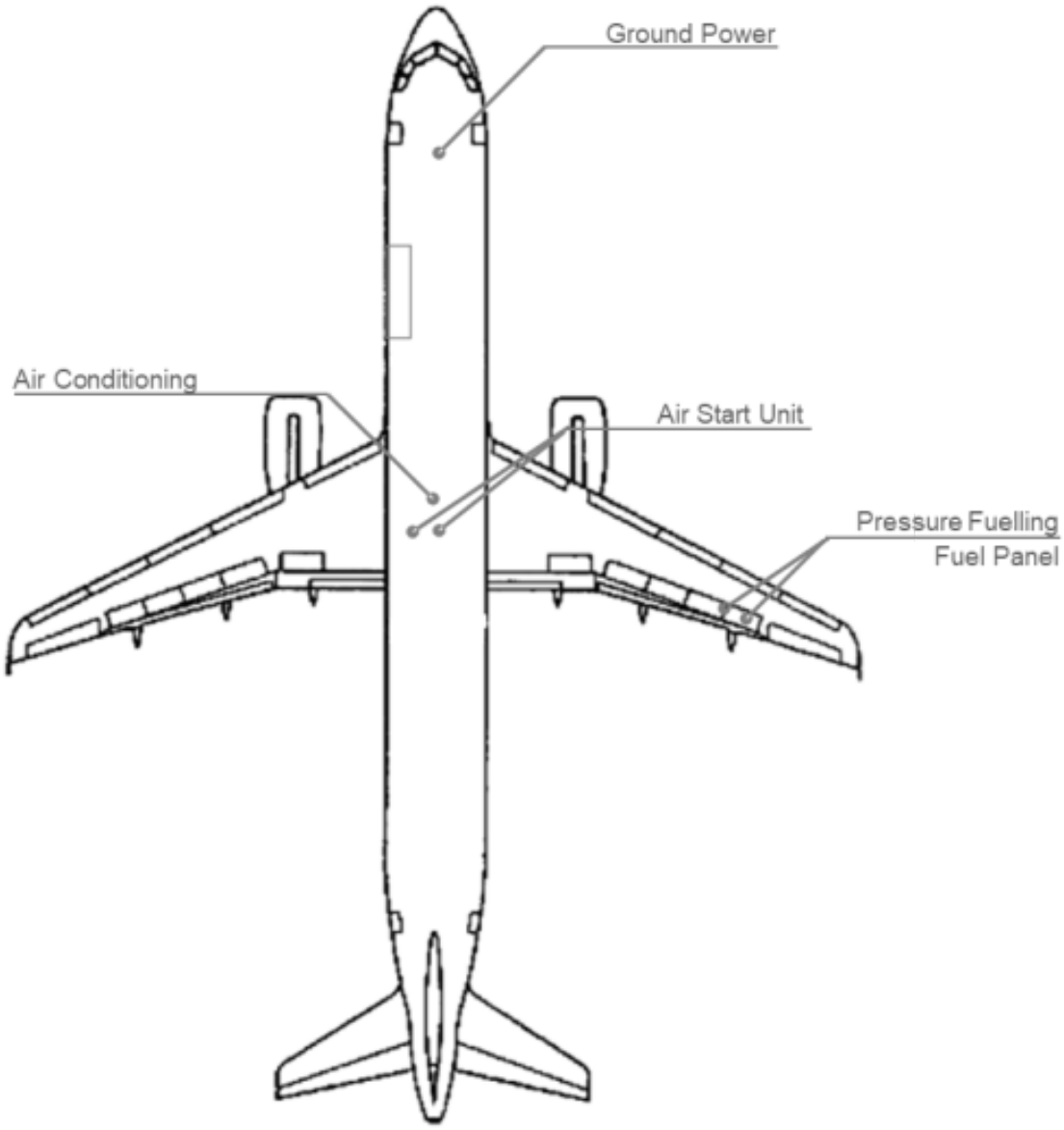

3.2 Servicing Specifications

System	Requirements	Notes
Ground Power	115/200V AC / 90 kVA / 400 Hz	1 GPU connection available
Fuel	Jet A1	Fuel control panel on **RH wing only**
Air Condition Unit	Maximum Flow Rate 150 ppm	1 ACU inlet available
Air Start Unit	Minimum Capacity 226 ppm Max. / Min. pressure 60 / 40 psi	2 ASU inlets available. 2 ASUs may be required, depending on flow rate and ambient air temperature.

UNCONTROLLED DOCUMENT (23 SEPTEMBER 2024 13:59:57)

4. Ground Support Equipment

4.1 Positioning of GSE

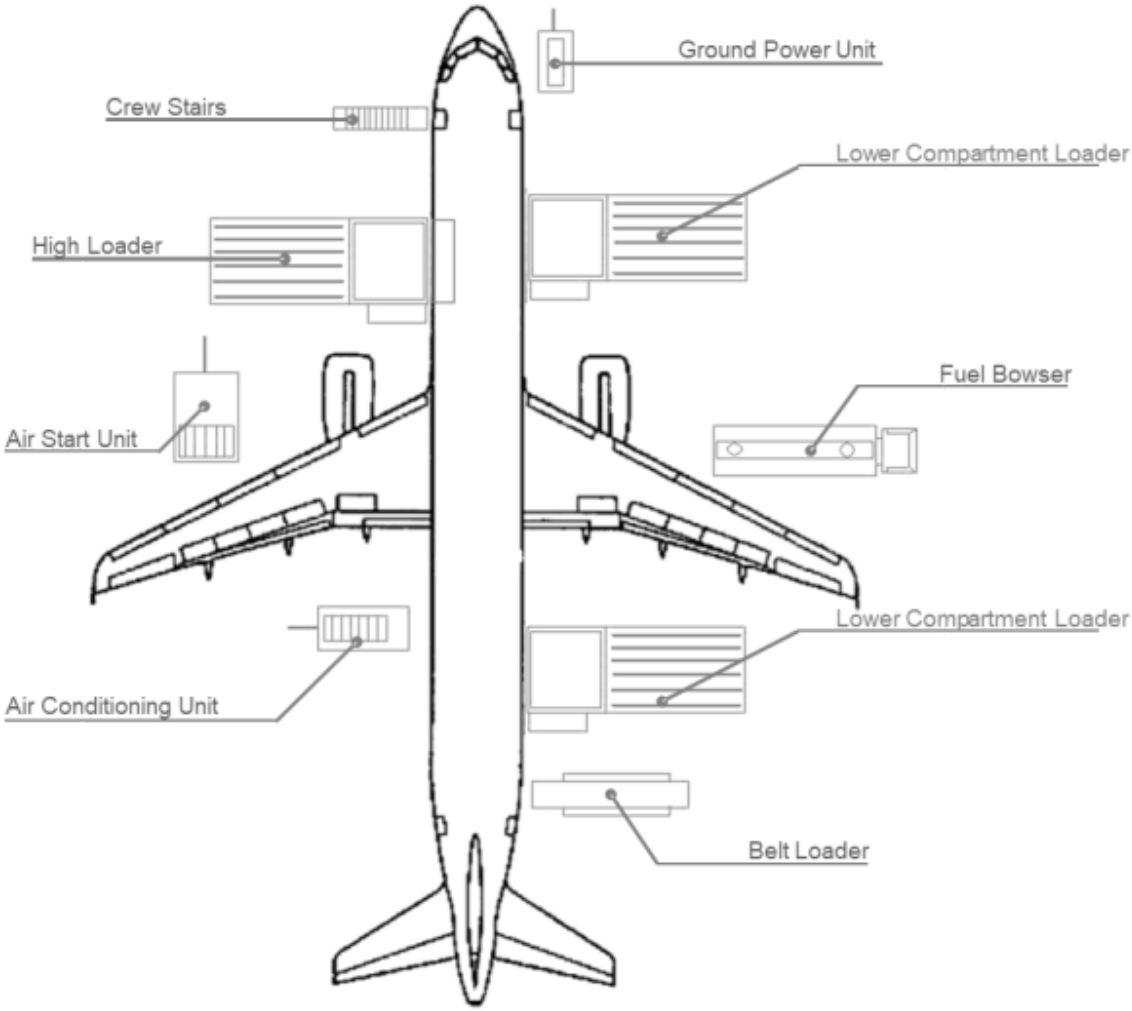

4.2 GSE Requirements

GSE	Type	Quantity
High Loader	Cargo Loader for Main-deck	1
High Loader	Cargo Loader for Lower-deck	2
Ground Power Unit	Diesel, Electric or Fixed	1
Crew Stairs	Platform height 149 – 158 inches	1
Belt Loader	Standard (30 ft recommended)	2
Tractor	Diesel or Electric	3
Dolly wagons	125”/ 88” capable 60.4”/61.5” capable	Up to 14 Up to 10
Belly Container / Wagon	As required	According to load

UNCONTROLLED DOCUMENT
UNCONTROLLED DOCUMENT

UNCONTROLLED DOCUMENT (23 SEPTEMBER 2024 13:59:57)

UNCONTROLLED DOCUMENT

5. Standard Turnaround Times

Turn-around time for a transit stop:	00:40 hour (partial off- and on-load)
Turn-around time for an end stop:	00:55 hour (full off- and on-load)

Note: Standard turn-around times are suggested for planning purposes. Actual times will vary depending on actual load and staffing.

UNCONTROLLED DOCUMENT

UNCONTROLLED DOCUMENT

UNCONTROLLED DOCUMENT (23 SEPTEMBER 2024 13:59:57)

UNCONTROLLED DOCUMENT

6. Safety Areas

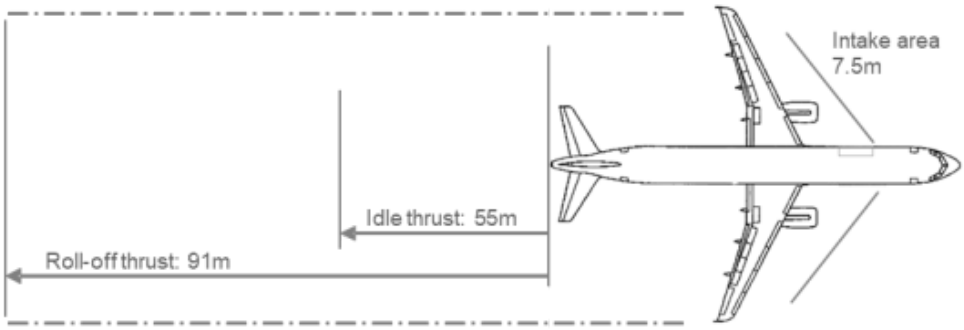

UNCONTROLLED DOCUMENT

UNCONTROLLED DOCUMENT

UNCONTROLLED DOCUMENT (23 SEPTEMBER 2024 13:59:57)

UNCONTROLLED DOCUMENT

7. Strong Wind Conditions

If the wind conditions on the ramp reach the following speeds, the corresponding actions shall be taken.

Wind Speed	Action
Up to 40 knots	Normal operation for all doors .
More than 40 knots	Lower deck Cargo doors must not be opened.
Up to 65 knots	Crew Entry Door can be opened, Main deck Cargo door may be opened or closed.
More than 65 knots	Do not operate any doors, all doors must be closed before wind speed exceeds 65 knots.

Note: The cargo door shall be in the closed and locked position for towing, taxiing and jacking of the aircraft. Do not open or operate the door if the actual or anticipated wind velocity or gust exceeds the prescribed limits. Severe structural damage to the door and/or the aircraft may result.

UNCONTROLLED DOCUMENT

UNCONTROLLED DOCUMENT

UNCONTROLLED DOCUMENT (23 SEPTEMBER 2024 13:59:57)

UNCONTROLLED DOCUMENT

8. Aircraft Door Dimensions

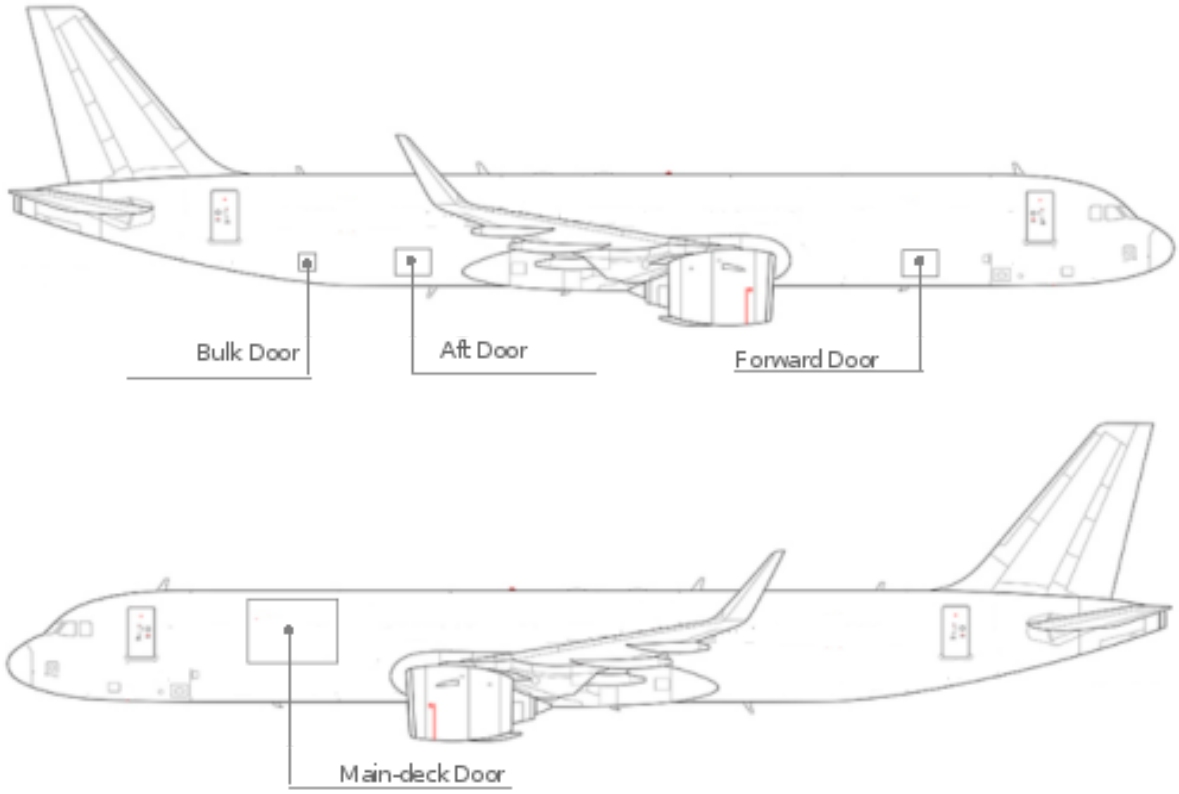

Door width, height, and sill height are defined as follows.

(This drawing is for illustration purposes only and may not be an exact representation of this aircraft type)

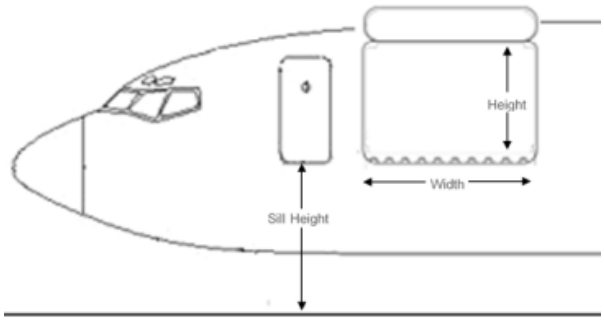

All dimensions are in centimetres (cm).

Door	Door Width	Door Height	Door Sill Heights
Crew	-	-	360
Main-Deck	364	213	335
Lower Deck Door Forward	181	119	210
Lower Deck Door Aft	181	119	220
Bulk Door	95	70	233

UNCONTROLLED DOCUMENT (23 SEPTEMBER 2024 13:59:57)

UNCONTROLLED DOCUMENT

9. Compartment Classification and Air-Conditioning

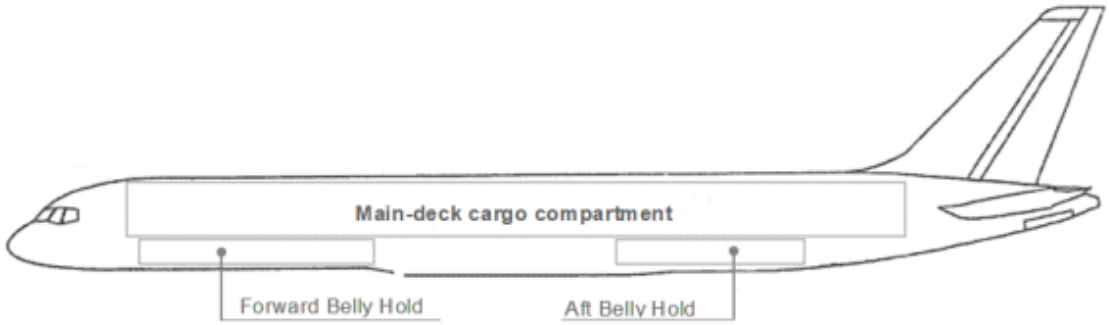

9.1 Compartment Classification

Compartment		Features
Main-deck	Position 1 loaded with 88" ULD **with** access isle	- Classification **E**
		- Pressurisation
		- Smoke Detection
		- **Accessible** during flight
	Position 1 loaded with 88" ULD **without** access isle	- Classification **E**
		- Pressurisation
		- Smoke Detection
		- **In-accessible** during flight
Belly All compartments		- Classification **C**
		- Pressurisation
		- Smoke Detection
		- **In-accessible** during flight

9.2 Air-Conditioning

	Main-deck	FWD Hold	AFT Hold
Temperature	18C-30C	10C to 21C	5C-26C
Heating	YES	NO	YES
Heat Adjust	YES	NO	YES
Cooling	YES	NO	YES
Ventilation	YES	YES	YES

Note: The cargo compartment temperature may vary, depending on external factors (flight duration, outside temperature...)

The actual bulk cargo compartment temperature may be 10 degrees C lower than the selected temperature.

UNCONTROLLED DOCUMENT (23 SEPTEMBER 2024 13:59:57)

UNCONTROLLED DOCUMENT

10. Aircraft Cabin Contour Dimensions

The aircraft has one contour zone: CI, as illustrated in the diagrams below.

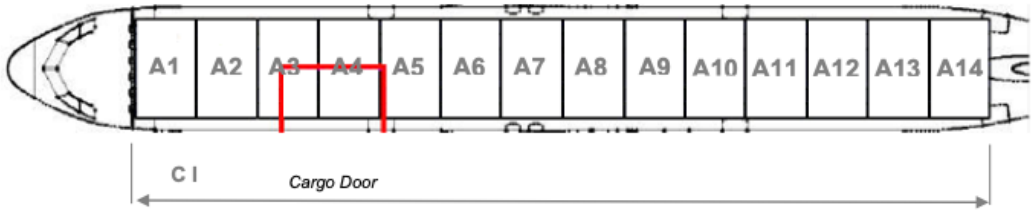

10.1 Contour CI

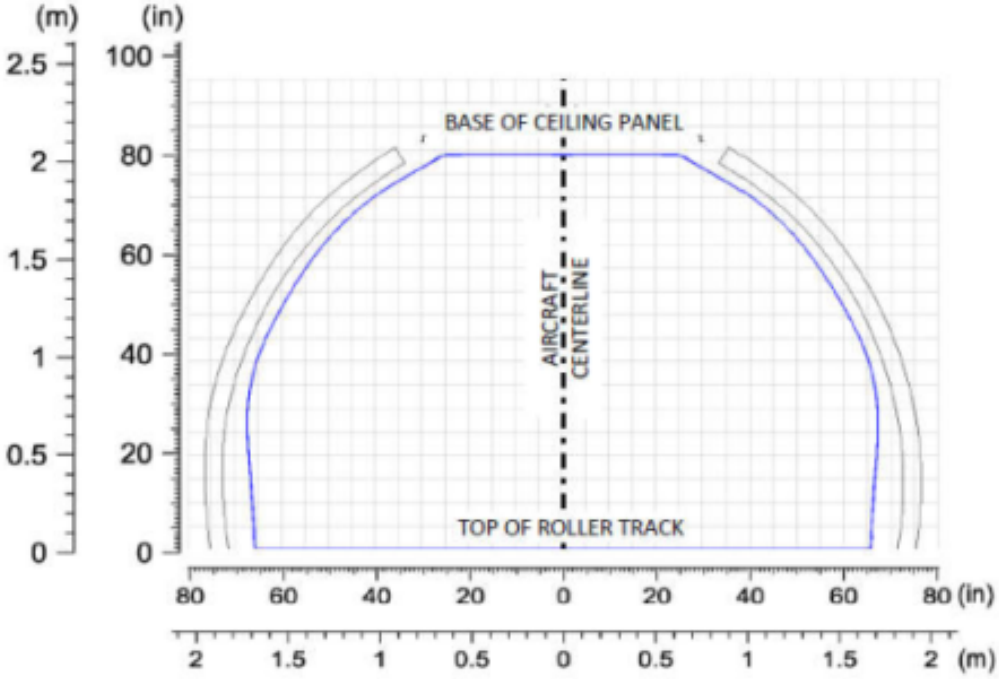

The maximum build-up dimensions must not be greater than:

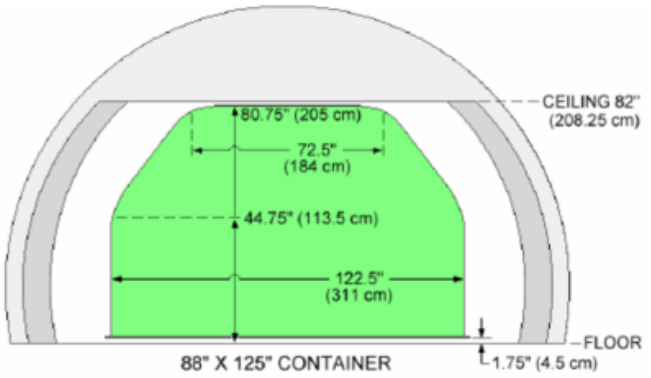

Note: The sloped contour on the side must face forward.

UNCONTROLLED DOCUMENT (23 SEPTEMBER 2024 13:59:57)

UNCONTROLLED DOCUMENT

11. Maximum Position Weights

11.1 Maximum Main-deck ULD Weights in Kilograms

	ULD Position													
ULD Size	A1	A2	A3	A4	A5	A6	A7	A8	A9	A10	A11	A12	A13	A14
125"/ 88"	1513	2018					2523				2018			

Note: The limits defined do not reflect cumulative running load limits of the main deck and do not reflect limits in conjunction with combined main & lower deck loading.

11.2 Maximum Lower-deck Compartment Weights in Kilograms

	FWD LD					AFT LD					
POS.	11P	12P	21P	22P	23P	31P	32P	33P	41P	42P	5
Max (kg)	1134					1134					1497
Compt. Max (kg)	2268		3402			3402			2268		
Hold Max (kg)	5670					5670					

Note: The limits defined do not reflect cumulative running load limits of the main deck and do not reflect limits in conjunction with combined main & lower deck loading.

11.3 Maximum Bulk Compartment Weights in Kilograms

	Bulk / Compartment 5		
Compt.	51	52	53
Bay / Section	374	353	702
Hold Max (kg)	1497		

11.4 Combined / Pyramidal Load Limitations

Further combined load limitations are applicable for all registrations in this document.

The limitations in this section are not applicable:

- If total payload is less than 17000 kg, or
- If only the main-deck or only the lower-deck is loaded (regardless of payload weight), or
- If only the main-deck and bulk compartment are loaded (regardless of payload weight).

To ensure no combined pyramidal loading, perform the following ZFW (zero fuel weight) CG checks:

- If combined payload is more than 17000 kg and loaded on both (main and lower) decks, the following minimum weight constraints are applicable:

UNCONTROLLED DOCUMENT (23 SEPTEMBER 2024 13:59:57)

UNCONTROLLED DOCUMENT

Total Payload (kg)	ZFW CG (%MAC)	Minimum Total Weight on A1 (B1), A2 (B2), 11, 12 (kg)
>17000	18.5 or below	3000
	38.0	0
>20000	18.5 or below	3000
	38.0	0
>27000	18.5 or below	3500
	38.0	0

Exact minimum weight required shall be determined by linear interpolation based on actual aircraft ZFW CG and total payload.

UNCONTROLLED DOCUMENT

UNCONTROLLED DOCUMENT

UNCONTROLLED DOCUMENT (23 SEPTEMBER 2024 13:59:57)

UNCONTROLLED DOCUMENT

12. Aircraft ULD Compatibility

The loading combinations shown here are examples only. More combinations are possible. Full information covering possible loading combinations, and how they interact, can be found in the Sable system.

12.1 Main Deck Configurations

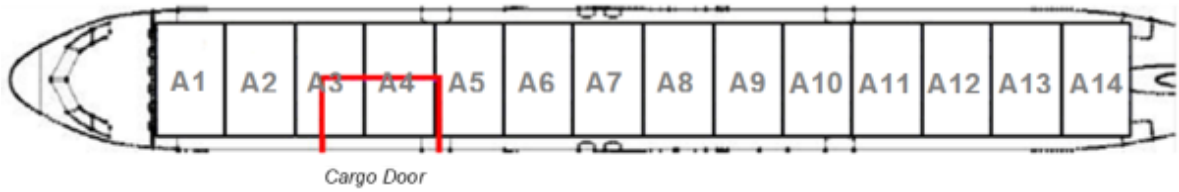

Configuration 1: 14 Lateral 125”/88’ ULD positions

Standard Main deck Container Configuration:

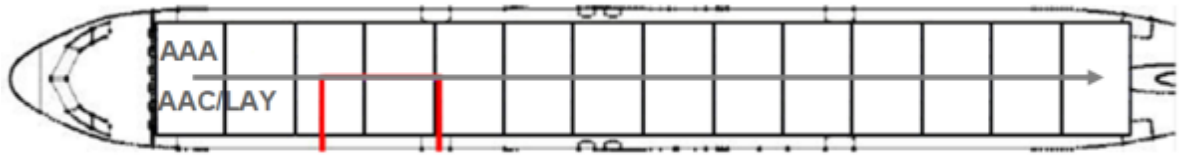

UNCONTROLLED DOCUMENT

UNCONTROLLED DOCUMENT

UNCONTROLLED DOCUMENT (23 SEPTEMBER 2024 13:59:57)

UNCONTROLLED DOCUMENT

12.2 Main Deck ULD Compatibility

The following ULD type loading restrictions apply. The ULD type can be loaded on positions marked with a 'Y'. The ULD type cannot be loaded on positions marked with a 'N'.

		ULD Type			
	Pos	AAA	AAC/LAY	AAJ/LAK	PAG/PAJ
Configuration 1	A1	Y1	Y2	Y	Y
	A2	Y1	Y2	Y	Y
	A3	Y1	Y2	Y	Y
	A4	Y1	Y2	Y	Y
	A5	Y1	Y2	Y	Y
	A6	Y1	Y2	Y	Y
	A7	Y1	Y2	Y	Y
	A8	Y1	Y2	Y	Y
	A9	Y1	Y2	Y	Y
	A10	Y1	Y2	Y	Y
	A11	Y1	Y2	Y	Y
	A12	Y1	Y2	Y	Y
	A13	Y1	Y2	Y	Y
	A14	Y1	Y2	Y	Y3

Y1:AAA5974 – 8274 only, allowed.
Y2: All LAY serial range and AAC serial range 9021-9995 allowed.
Y3: Pallet stacks not allowed.

Notes:

- All pallets must be to contour
- Position A1: Where a ULD has a sloped contour on the lateral side (front/back), the sloped side shall face forward.
- Position A14: Where a ULD has a sloped contour on the lateral side (front/back), the sloped side shall face aft.

UNCONTROLLED DOCUMENT

UNCONTROLLED DOCUMENT

UNCONTROLLED DOCUMENT (23 SEPTEMBER 2024 13:59:57)

12.3 Lower Deck Configurations

12.3.1 Forward and Aft Holds

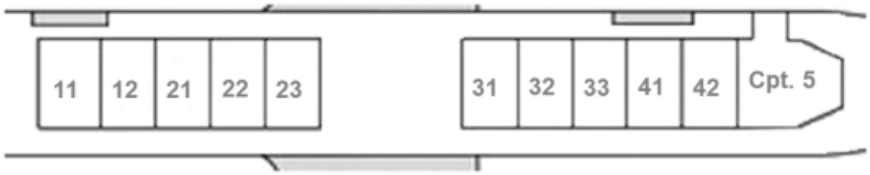

12.3.2 Lower Deck ULD Compatibility

The following ULD type loading restrictions apply. The ULD type can be loaded on positions marked with a 'Y'. The ULD type cannot be loaded on positions marked with a 'N'.

		ULD Type	
	Pos	AKH	PKC
FWD	11	Y	Y
	12	Y	Y
	21	Y	Y
	22	Y	Y
	23	Y	Y
AFT	31	Y	Y
	32	Y	Y
	33	Y	Y
	41	Y	Y
	42	Y	Y

UNCONTROLLED DOCUMENT
UNCONTROLLED DOCUMENT

UNCONTROLLED DOCUMENT (23 SEPTEMBER 2024 13:59:57)

13. Loading and Un-Loading

RISK OF TAIL-TIPPING

13.1 Un-Loading Sequence

Observe the following rules to prevent tail-tipping

Step 1: Un-load the aft lower deck.

Step 2: Un-load the ULDs on the main deck in the following numbered sequence and respect standard step un-loading method:



Step 3: Un-load the forward lower deck. The Forward Lower-deck can be un-loaded simultaneously with the main deck as long as the aft Lower-deck is un-loaded first.

13.2 Loading Sequence

Observe the following rules to prevent tail-tipping

Step 1: Load the forward lower deck.

Step 2: Load the ULDs on the main deck in the following numbered sequence and respect standard step un-loading method:

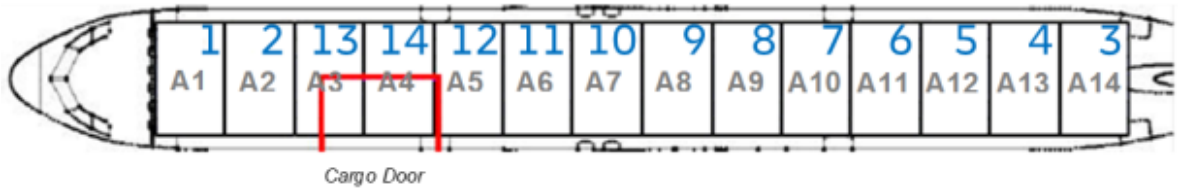

Step 3: Load the aft lower deck. The Aft Lower-deck can be loaded simultaneously with the main deck as long as the forward Lower-deck is loaded first.

UNCONTROLLED DOCUMENT
UNCONTROLLED DOCUMENT

UNCONTROLLED DOCUMENT (23 SEPTEMBER 2024 13:59:57)

UNCONTROLLED DOCUMENT

13.3 Loading Notes

13.3.1 Commencing Loading

Prior to loading of the aircraft, Flight Crew will conduct a security search of the aircraft. Loading of the aircraft shall not commence until approval has been given by the Flight Crew.

13.3.2 Counter Ballast

The A321 P2F is a very stable aircraft and quite nose heavy due to the forward MCD, and it is possible to load and / or un-load the Main Deck independently from the Lower Deck loading/unloading.

Plan positions A1 and A2 with a minimum total weight of 2,000kgs or greater, or, if the Main Deck total weight is equal to or fewer than 8,000kgs then plan positions A1 and A2 with at least 10% of the total Main Deck weight.

13.3.3 Parallel dolly-train Un-load

Parallel dolly-train un-load is **not allowed.**

13.3.4 Simultaneous Loading and Un-loading of Lower deck Holds

Due to the inherent stability of this aircraft, simultaneous loading and/or un-loading of all lower-deck holds, using up to 2 high-loaders, at the same time as or independent of the main-deck, is allowed.

13.3.5 Turning ULDs on Ball mat

Do not “spin”, rotate or turn ULDs on ball mat.

13.3.6 Lower Deck Cargo Loading System

If the aft lower deck CLS becomes inoperative, the following restrictions apply:

- Position 42 shall remain void to allow for ULD maneuverability and reduce risk of personal injury
- The maximum gross weight limit for ULDs in the aft lower deck shall be restricted to **400 Kg**

UNCONTROLLED DOCUMENT

UNCONTROLLED DOCUMENT

UNCONTROLLED DOCUMENT (23 SEPTEMBER 2024 13:59:57)

14. Rigid, Oversized and Special Loads

For guidance on the handling of special loads, please refer to the Special Loads Regional Contact Instructions outlined in Chapter 6 **6.12.22.3 - Determining Loadability of Special Loads**. Where direct operator approval is required, the Regional Airside Team will liaise with Global Airside as needed.

14.1 Floating / Heavy Pallets

Loading of floating ULDs, or ULDs exceeding the maximum allowed position weight, is not allowed.

14.2 Crushable Cargo Requirements

Where Rigid Cargo has been identified, the first loaded position on the aircraft shall be loaded with Crushable Cargo ULDs suitable for protecting the barrier wall against unrestrained Rigid Cargo.

14.3 Aircraft Engines

Specific authorization must be obtained prior to loading aircraft engines.

14.4 Live Animals

14.4.1 Horses

Horses are **not allowed** to be loaded without prior approval of Titan Airways.

14.4.2 Other Live Animals

Loading of AVI requires approval from Titan Airways, please contact your Special Loads Regional Contact to request approval.

Note: AVI loading only permitted on Main-Deck and Lower AFT hold.

UNCONTROLLED DOCUMENT
UNCONTROLLED DOCUMENT

UNCONTROLLED DOCUMENT (23 SEPTEMBER 2024 13:59:57)

UNCONTROLLED DOCUMENT

15.1 Radioactive (RRY), Magnetised (MAG) and Cargo Aircraft Only (CAO)

The following Dangerous Good type loading restrictions apply. The Dangerous Good type can be loaded on positions marked with a 'Y'. The Dangerous Good type cannot be loaded on positions marked with a 'N'.

	Position																
DG Type	A1	A2	A3	A4	A5	A6	A7	A8	A9	A10	A11	A12	A13	A14	FWD LD	AFT LD	Bulk
MAG	N	N	N	N	N	Y	Y	Y	Y	Y	Y	Y	Y	Y	N	Y	Y
CAO	N	N	N	N	N	N	N	N	N	N	N	N	N	N	Y	Y	Y
RRY (max. 50 TI combined)	N	N	N	N	N	N	N	Y	Y	Y	Y	Y	Y	Y	N	Y	Y
RRY (max. 200 TI combined)	N	N	N	N	N	N	N	Y	Y	Y	Y	Y	Y	Y	N	Y	Y

Note: CAO exemptions that may be loaded on the Main Deck (Main Deck hold is inaccessible).

All Operations (CAO 9.3.4)		
Goods labelled "Cargo Aircraft Only" cannot be carried on the main deck, other than the following exemptions:		
	**Hazadous Materials Class 3**: Flammable Liquids	Class 3 (flammable liquids), Packing Group III (unless labelled corrosive)
	**Hazadous Materials Class 6.1**: Poison	Division 6.1 (toxic) (unless labelled for any hazard class or division except Flammable Liquid)
	**Hazadous Materials Class 6.2**: Biohazard	Division 6.2 (infectious substances)
	**Hazadous Materials Class 7**: Radioactive	Class 7 (radioactive) that does not meet the definition of another hazard class
	**Hazadous Materials Class 9**: Miscellaneous	(Class 9 (miscellaneous)
Articles of **UN3528** or **UN3529**		
All other "Cargo Aircraft Only" DG must travel on the LOWER deck		

Uncontrolled if Printed

UNCONTROLLED DOCUMENT (23 SEPTEMBER 2024 13:59:57)

15.2 Dry Ice

Please see the Global Supplementary Operational Document **Dry Ice Consolidation table** for the current maximum allowed Dry Ice limits.

15.2.1 Dry Ice (ICE) and Live Animals (AVI)

Live animals (AVI) should not be transported on the Main Deck with Dry Ice loads greater than or equal to 635 kilograms.

AVI should not be transported in the lower cargo compartments with any quantity of dry ice in the same compartment.

15.3 Lithium Batteries

Please see the Global Supplementary Operational Document **Lithium Battery Loadability Consolidation Table** for the current UN3480 Section IA/IB (RBI), UN3090 Section IA/IB (RBM), UN3481 Section I (RLI), UN3091 Section I (RLM) load ability limits.

UNCONTROLLED DOCUMENT
UNCONTROLLED DOCUMENT

UNCONTROLLED DOCUMENT (23 SEPTEMBER 2024 13:59:57)

16. Messaging and Reporting

16.1 Messaging

Standard messaging rules apply.

16.2 Reporting

Standard reporting rules apply.

UNCONTROLLED DOCUMENT
UNCONTROLLED DOCUMENT

UNCONTROLLED DOCUMENT (23 SEPTEMBER 2024 13:59:57)

UNCONTROLLED DOCUMENT

17. Load Control Data

17.1 Standard Mass Additions

17.1.1 Additional Crew Members (ACM)

Maximum Number of ACMs:	2
Mass of ACM:	85 kg

17.1.2 Fly Away Kit (FAK) and Ballast

Fly Away Kit (FAK):	Not applicable.
Ballast:	-

17.2 Minimum Fuel and Standard Taxi Fuel

Minimum Fuel:	-
Standard Taxi Fuel:	225 kg

17.3 LMC Restrictions

Not applicable.

UNCONTROLLED DOCUMENT

UNCONTROLLED DOCUMENT

UNCONTROLLED DOCUMENT (23 SEPTEMBER 2024 13:59:58)

18. Maximum Package Dimensions

18.1 Main Deck

The maximum dimensions of packages which will pass through the Main Deck Cargo Compartment hold door opening and which can be placed within the hold are shown in the table below.

Package height[1]		MAX package length	
(in)	(m)	(in)	(m)
45	1.14	125	3.18
51	1.30	116	2.94
57	1.45	106	2.70
63	1.60	97	2.47
69	1.74	88	2.25
75	1.91	70	1.77
82	2.08	49	1.23
MAX package width[2] = 134.85 in (3.425 m)			

(1) *The height is measured from the top of the rollers of the CLS.*

(2) *The maximum package width shown is the limitation imposed by the distance between the cargo door entrance guides. The actual pallet width that can be accommodated by the cargo loading system at each position, is 88 in (2.235m).*

EXAMPLE	A package with a 60 in height, 88 in width and 90 in length can be straight loaded, because the table shows that for a height up to 63 in, the MAX length is 97in. A package with a 50 in height, 88 in width and 120 in length cannot be straight loaded, because the table shows that for a height up to 51 in, the MAX length is 116 in.

UNCONTROLLED DOCUMENT
UNCONTROLLED DOCUMENT

UNCONTROLLED DOCUMENT (23 SEPTEMBER 2024 13:59:58)