UNCONTROLLED DOCUMENT



SWN B738BCF
West Atlantic Sweden B737-800BCF

Revision: 3
Date: 21 November 2024

1 West Atlantic Sweden Boeing 737-800BCF Registrations
2 Aircraft Dimensions
3 Aircraft Servicing Points and Specifications
4 Ground Support Equipment
5 Standard Turnaround Times
6 Safety Areas
7 Strong Wind Conditions
8 Aircraft Door Dimensions
9 Compartment Classification and Air-Conditioning
10 Aircraft Cabin Contour Dimensions
11 Maximum Position Weights
12 Aircraft ULD Compatibility
13 Loading and Un-Loading
14 Rigid, Oversized and Special Loads
15 Restricted Commodities Loading
16 Messaging and Reporting
17 Load Control Data
18 Maximum Package Dimensions

UNCONTROLLED DOCUMENT

UNCONTROLLED DOCUMENT

UNCONTROLLED DOCUMENT

Page	Date	Comment
14	21 November 2024	ULD types no longer available in the network removed. *(Minor)*
16	21 November 2024	Guidance on the handling of special loads information added. *(Minor)*
17	21 November 2024	Global Airside replaced with, Special Loads Regional Contact. *(Minor)*

UNCONTROLLED DOCUMENT

UNCONTROLLED DOCUMENT

UNCONTROLLED DOCUMENT (21 NOVEMBER 2024 16:31:38)

1. West Atlantic Sweden Boeing 737-800BCF Registrations

IATA Designator: -

ICAO Designator: **SWN**

Valid for: **SERLJ**

UNCONTROLLED DOCUMENT
UNCONTROLLED DOCUMENT

2. Aircraft Dimensions

All dimensions in meters

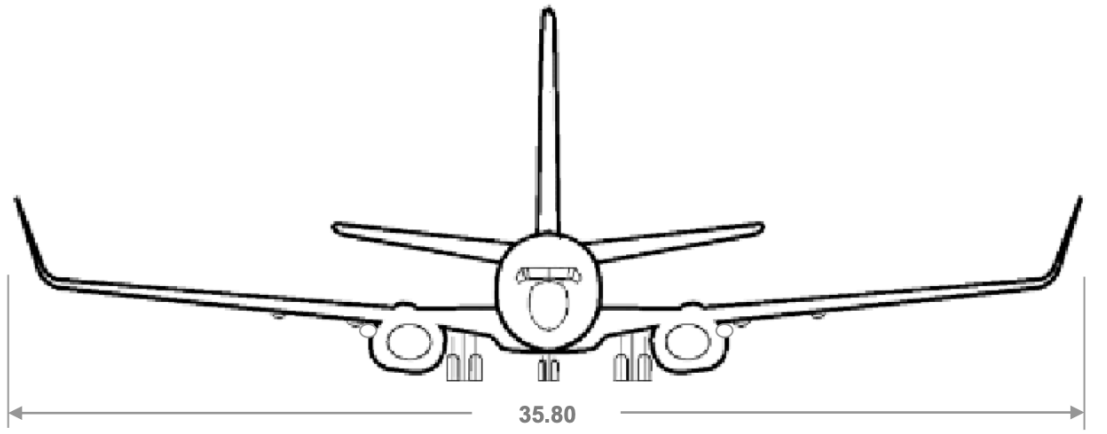

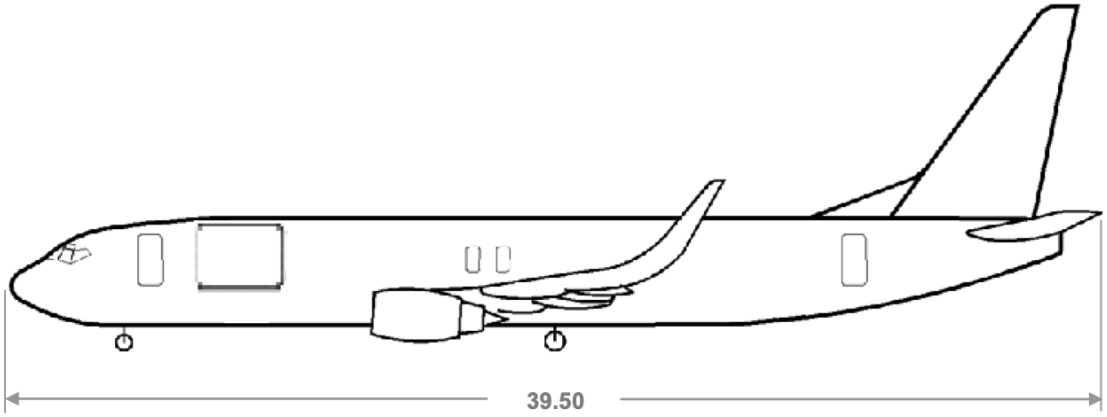

UNCONTROLLED DOCUMENT
UNCONTROLLED DOCUMENT

UNCONTROLLED DOCUMENT (21 NOVEMBER 2024 16:31:38)

UNCONTROLLED DOCUMENT

3. Aircraft Servicing Points and Specifications

3.1 Servicing Points

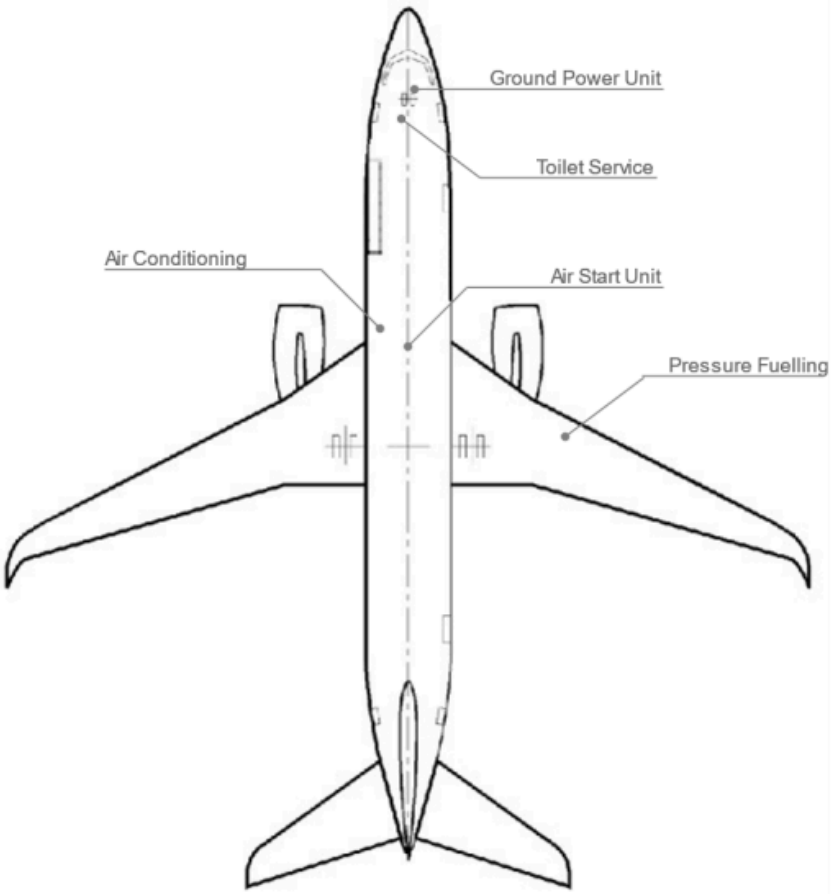

3.2 Servicing Specifications

System	Requirements	Notes
Ground Power Unit	115/200V AC / 60 kVA / 400 Hz	
Fuel	Jet A1	Fuel Control Panel **on RH wing only**
Air Condition Unit	Maximum Flow Rate 210 ppm	1 ACU inlet available
Air Start Unit	Minimum Capacity 120-145 ppm Max. / Min. pressure 45 / 30 psi	1 ASU inlet available.

UNCONTROLLED DOCUMENT (21 NOVEMBER 2024 16:31:38)

UNCONTROLLED DOCUMENT

4. Ground Support Equipment

4.1 Positioning of GSE

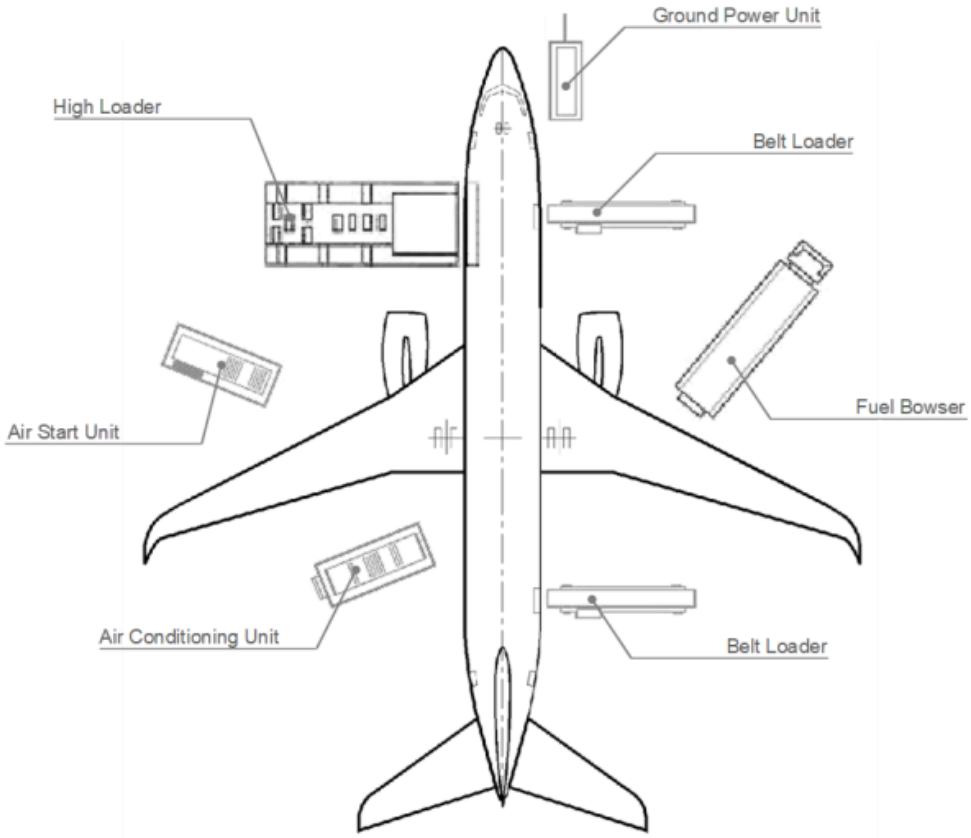

4.2 GSE Requirements

GSE	Type	Quantity
High Loader	Standard	1
Crew stairs	Platform height 2.62 – 2.77 meters	1
Ground Power Unit	Diesel, Electric or Ground-Power	1
Air Start Unit	Standard	1
Belt Loader	Standard	1 or 2
Tractor	N/A	4
Dolly Wagon Main-deck	125”/88” & 60.5”/61.4” capable	Up to 11
Belly Container / Wagon	As required	According to load

UNCONTROLLED DOCUMENT

UNCONTROLLED DOCUMENT (21 NOVEMBER 2024 16:31:38)

5. Standard Turnaround Times

5.1 Non-TMP Stations

Turn-around time for a transit stop:	00:35 hour (partial off- and on-load)
Turn-around time for an end stop:	00:50 hour (full off- and on-load)

5.2 TMP Stations

Un-load:	00:20 hour
Load:	00:25 hour
Full turn-around:	00:35 hour

Note:

Based on Max. 600 kg inbound and/or 400 kg outbound loose-load without assigning additional loading resources.

UNCONTROLLED DOCUMENT
UNCONTROLLED DOCUMENT

6. Safety Areas

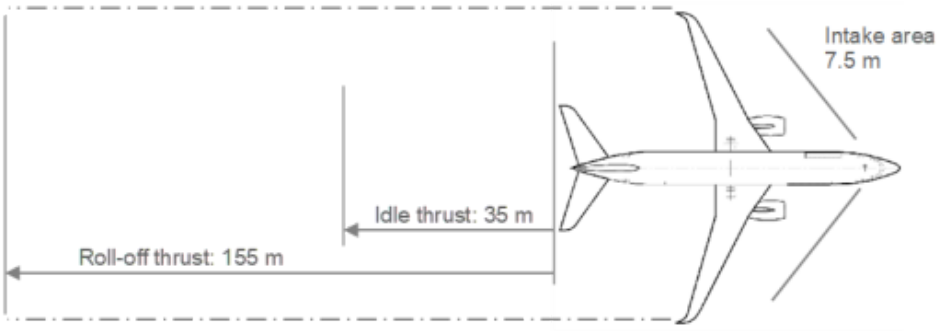

UNCONTROLLED DOCUMENT
UNCONTROLLED DOCUMENT

UNCONTROLLED DOCUMENT (21 NOVEMBER 2024 16:31:38)

UNCONTROLLED DOCUMENT

7. Strong Wind Conditions

If the wind conditions on the ramp reach the following speeds, the corresponding actions shall be taken.

Wind Speed	Action
Up to 40 knots	Normal Operations: All doors can be opened and left open
More than 40 knots	Do not open additional doors
More than 60 knots	All open doors shall be closed immediately

UNCONTROLLED DOCUMENT

UNCONTROLLED DOCUMENT

UNCONTROLLED DOCUMENT (21 NOVEMBER 2024 16:31:38)

8. Aircraft Door Dimensions

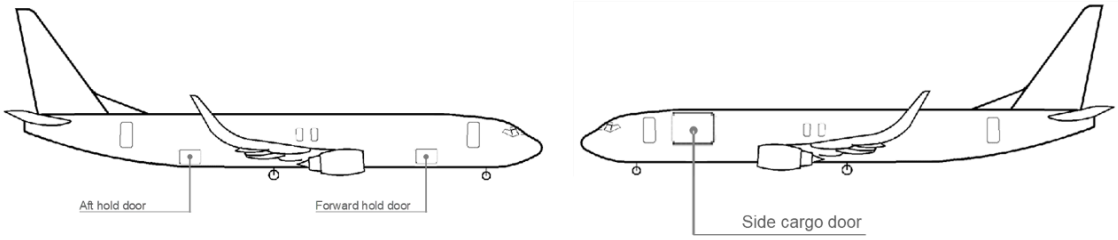

Door width, height, and sill height are defined as follows.

(This drawing is for illustration purposes only and may not be an exact representation of this aircraft type)

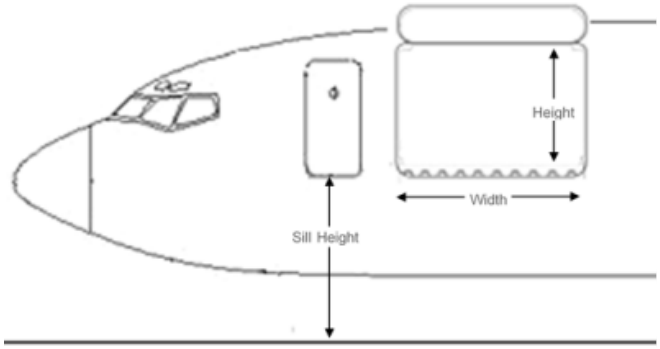

All dimensions are in Centimetres (cm).

Door	Door Width	Door Height	Min. Door Sill Height	Max. Door Sill Height
Crew Door	-	-	262	277
Main Deck	358	218	265	280
Forward Hold	121	89	127	140
Aft Hold	121	79	137	137

UNCONTROLLED DOCUMENT
UNCONTROLLED DOCUMENT

UNCONTROLLED DOCUMENT (21 NOVEMBER 2024 16:31:38)

UNCONTROLLED DOCUMENT

9. Compartment Classification and Air-Conditioning

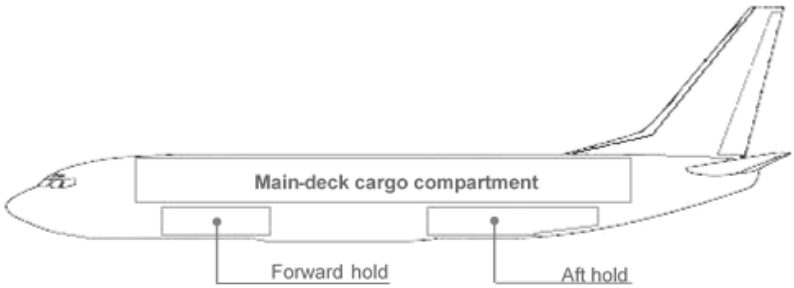

9.1 Compartment Classification

Compartment		Features
Main-deck	Position A loaded with 88" ULD **without** 50 cm (18") isle	- Classification **E**
		- Pressurisation
		- Smoke Detection
		- **In-accessible** during flight
	Position A loaded with 88" ULD **with** 50 cm (18") aisle	- Classification **B**
		- Pressurisation
		- Smoke Detection
		- **Accessible** during flight
Lower-deck All Compartments		- Classification **C**
		- Pressurisation
		- Smoke Detection
		- Fire Suppression
		- **In-accessible** during flight

9.2 Air-Conditioning

	Main-deck	Forward Hold	Aft Hold
Temperature	1C to 22C	Max 3C*	Max 3C*
Heating	Yes	No	
Heat adjust			
Cooling			
Ventilation		Yes	

* Temperature in FWD and AFT holds depend on Main-deck heating but will never be more than 3C. No separate heating of the lower-deck.

UNCONTROLLED DOCUMENT (21 NOVEMBER 2024 16:31:38)

UNCONTROLLED DOCUMENT

10. Aircraft Cabin Contour Dimensions

10.1 Aircraft Layout

The aircraft is divided into three contour zones: CI, CII and CIII.

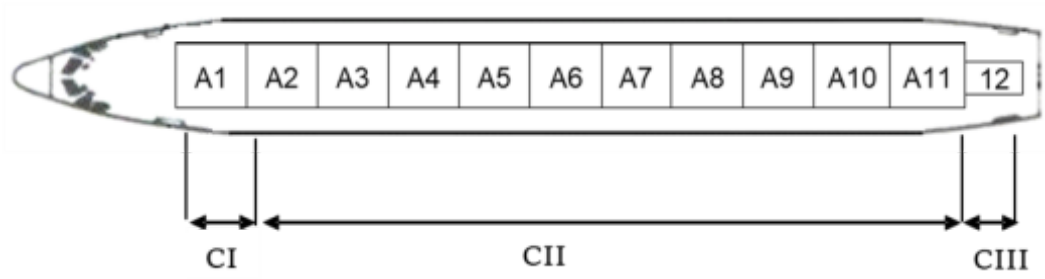

10.1.1 Contour CI

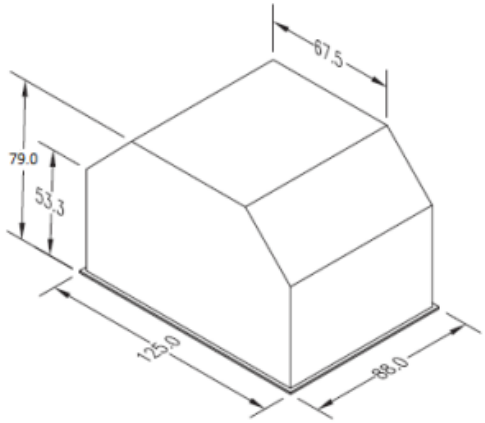

10.1.2 Contour CII

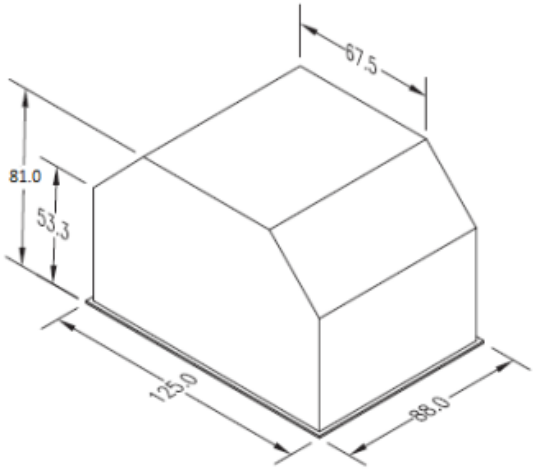

UNCONTROLLED DOCUMENT

UNCONTROLLED DOCUMENT (21 NOVEMBER 2024 16:31:38)

UNCONTROLLED DOCUMENT

10.1.3 Contour CIII

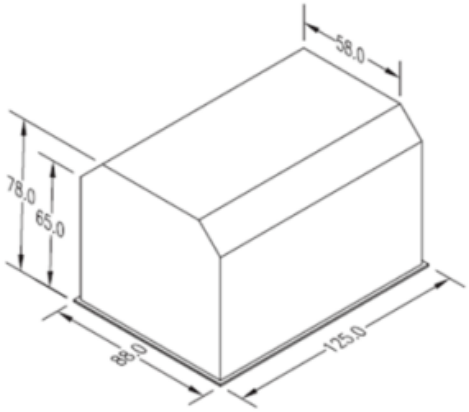

UNCONTROLLED DOCUMENT

UNCONTROLLED DOCUMENT

UNCONTROLLED DOCUMENT (21 NOVEMBER 2024 16:31:38)

UNCONTROLLED DOCUMENT

11. Maximum Position Weights

11.1 Maximum Main-deck ULD Weights in Kilograms

	ULD Position											
ULD Size	A1	A2	A3	A4	A5	A6	A7	A8	A9	A10	A11	P12
125"/ 88"	1814	2948			3628		2948				1814	
61.5"/60.4												1133

11.2 Maximum Total Main-deck Load

9G Barrier Limit: 24,494 Kg

11.3 Maximum Lower-deck Compartment Weights in Kilograms

	Aft hold			
Compartment	1	2	3	4
Max. Weight	814	2440	3777	667
Max. Volume (m3)	4.39	14.64	20.75	3.85

UNCONTROLLED DOCUMENT

UNCONTROLLED DOCUMENT

UNCONTROLLED DOCUMENT (21 NOVEMBER 2024 16:31:38)

UNCONTROLLED DOCUMENT

12. Aircraft ULD Compatibility

12.1 Aircraft Configurations

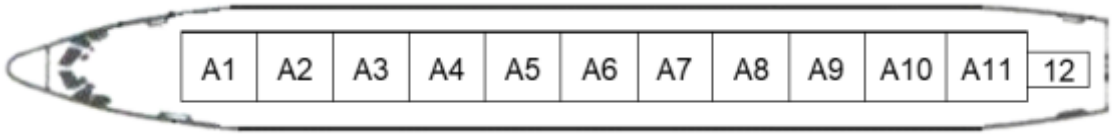

Configuration1: 11 x Lateral 125”/88” and 1 x 60.4”/61.5”

12.2 ULD Compatibility Table

The following ULD type loading restrictions apply. The ULD type can be loaded on positions marked with a ‘Y’. The ULD type cannot be loaded on positions marked with a ‘N’.

		ULD Type												
	Pos	AAA	AAC	AAJ	AEH	AEP	AKE	LAK	LAY	PAG	PEA	PEB	RKN	RKE
Configuration 1	A1	Y	Y1	Y	N	N	N	Y	Y	Y	N	N	N	N
	A2	Y	Y1	Y	N	N	N	Y	Y	Y	N	N	N	N
	A3	Y	Y1	Y	N	N	N	Y	Y	Y	N	N	N	N
	A4	Y	Y1	Y	N	N	N	Y	Y	Y	N	N	N	N
	A5	Y	Y1	Y	N	N	N	Y	Y	Y	N	N	N	N
	A6	Y	Y1	Y	N	N	N	Y	Y	Y	N	N	N	N
	A7	Y	Y1	Y	N	N	N	Y	Y	Y	N	N	N	N
	A8	Y	Y1	Y	N	N	N	Y	Y	Y	N	N	N	N
	A9	Y	Y1	Y	N	N	N	Y	Y	Y	N	N	N	N
	A10	Y	Y1	Y	N	N	N	Y	Y	Y	N	N	N	N
	A11	Y	Y1	Y	N	N	N	Y	Y	Y	N	N	N	N
	P12	N	N	N	Y	Y	Y	N	N	N	Y	Y	Y	Y

Y1: Only AAC DHL serial range 9021 and above allowed

Note: Pallet Stacks not allowed on position A11.

UNCONTROLLED DOCUMENT (21 NOVEMBER 2024 16:31:38)

UNCONTROLLED DOCUMENT

13. Loading and Un-Loading

13.1 Un-Loading Sequence

Step 1: Un-load the aft lower deck.

Step 2: Un-load the ULDs on the main deck in the following numbered sequence, **and respect standard stage un-loading method**.

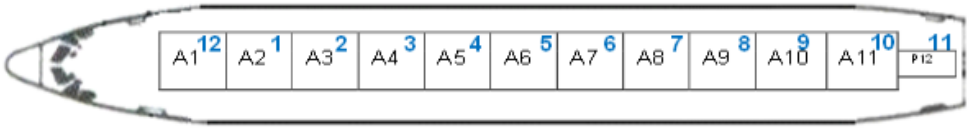

Step 3: Un-load the forward lower deck.

13.2 Loading Sequence

Step 1: Load the forward lower deck.

Step 2: Load the ULDs on the main deck in the following numbered sequence, **and respect standard stage loading method**.

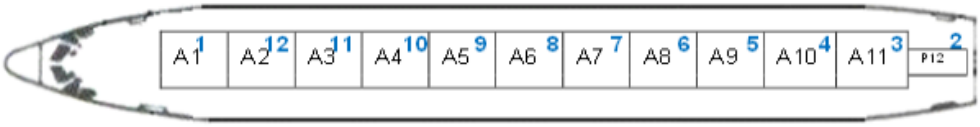

Step 3: Load the aft lower deck.

13.3 Loading Notes

13.3.1 Tail-Tipping

The B737-800BCF is not susceptible to tail-tipping. Due care, however, must be taken whilst un-loading and loading the aircraft to prevent the Centre of Gravity moving to a position that would result in tail-tipping. Following the prescribed un-loading and loading sequence is therefore of paramount importance. Furthermore, care must be taken whilst loading the ULDs on the main-deck, moving them at a moderate pace up and down the aircraft to prevent a sudden CoG shift, which may result in a tail-tip situation.

13.3.2 Tail Post

The use of a tail-post is not permitted on this aircraft.

13.3.3 ULD Clearance

There is very limited clearance between some ULDs and the inner roof lining on this aircraft. ULDs, AAA and AAC/LAY especially, which are even slightly out of contour will impact the roof lining and cause damage. Due care must therefore be exercised when un-loading and loading this aircraft.

13.3.4 Ballast ULD

If a ballast ULD is loaded on the aircraft, this shall not be removed by any member of staff unless the staff member has received specific written instruction to do so from West Atlantic Sweden.

UNCONTROLLED DOCUMENT (21 NOVEMBER 2024 16:31:38)

14. Rigid, Oversized and Special Loads

For guidance on the handling of special loads, please refer to the Special Loads Regional Contact Instructions outlined in Chapter 6 **6.12.22.3 - Determining Loadability of Special Loads**. Where direct operator approval is required, the Regional Airside Team will liaise with Global Airside as needed.

14.1 Floating / Heavy Pallets

ULDs which are heavier than the standard allowed maximum gross weight may be loaded on the main deck on a floating position.

Permission must be sought from Network Airside Europe before accepting any ULDs which require loading on a floating position.

The permission, including a special loading instruction, will be granted only after all details concerning the load and the loading have been checked and clarified.

14.2 Crushable Cargo Requirements

Where Rigid Cargo has been identified, the first loaded position on the aircraft shall be loaded with Crushable Cargo ULDs suitable for protecting the barrier wall against unrestrained Rigid Cargo.

14.3 Piercing Cargo

Piercing cargo may not be loaded on the first and last loaded position on the aircraft.

14.4 Aircraft Engines

Aircraft engines shall be loaded in positions A2-A11 only.

The ability to load aircraft engines depends on actual size and weight. Biggest loadable engine type allowed onboard this aircraft is the CFM56-3.

Permission must be sought from your Special Loads Regional Contact before accepting aircraft engines of any type.

UNCONTROLLED DOCUMENT
UNCONTROLLED DOCUMENT

UNCONTROLLED DOCUMENT (21 NOVEMBER 2024 16:31:38)

UNCONTROLLED DOCUMENT

14.5 Live Animals

14.5.1 Horses

Not applicable

14.5.2 Other Live Animals

The following table provides a list of commonly transported animals. If there is a requirement to transport animals not listed below, contact your Special Loads Regional Contact.

<table>
<tr><th></th><th>Main-Deck</th><th>FWD Hold</th><th>AFT Hold</th></tr>
<tr><td>Horses*</td><td>No</td><td colspan="2" rowspan="3">No</td></tr>
<tr><td>Day-old chickens</td><td>X</td></tr>
<tr><td>Monkeys</td><td rowspan="12">X</td></tr>
<tr><td>Pigs</td><td rowspan="12">X</td></tr>
<tr><td>Cattle</td></tr>
<tr><td>Sheep or Goats</td><td rowspan="11">X</td></tr>
<tr><td>Dogs or Cats</td></tr>
<tr><td>Small mammals or Birds</td></tr>
<tr><td>Tropical Fish</td></tr>
<tr><td>Reptiles or Amphibians</td></tr>
<tr><td>Eels</td></tr>
<tr><td>Crustaceans or Molluscs</td></tr>
<tr><td>Bees</td></tr>
<tr><td>Hatching eggs</td></tr>
</table>

X: Depends on accessibility, air conditioning and flight duration. Contact your Special Loads Regional Contact for more details.

UNCONTROLLED DOCUMENT (21 NOVEMBER 2024 16:31:38)

15. Restricted Commodities Loading

15.1 Radioactive (RRY), Magnetised (MAG) and Cargo Aircraft Only (CAO)

The following Dangerous Good type loading restrictions apply. The Dangerous Good type can be loaded on positions marked with a 'Y'. The Dangerous Good type cannot be loaded on positions marked with a 'N'.

	Position													
DG Type	A1	A2	A3	A4	A5	A6	A7	A8	A9	A10	A11	P12	FWD	AFT
MAG	N	N	N	N	N	N	N	N	N	N	Y	N	N	N
CAO	Y	Y	Y	Y	Y	Y	Y	Y	Y	Y	Y	N	Y	Y
RRY (max. 50 TI combined)	N	N	Y	Y	Y	Y	Y	Y	Y	Y	Y	Y	N	N
RRY (max. 200 TI combined)	N	N	N	N	Y	Y	Y	Y	Y	Y	Y	Y	N	N

Note: Cargo Aircraft Only (CAO) can be loaded on any Main Deck position to A11 provided they are loaded accessible. Accessible means that:

- The CAO is loaded on a pallet
- All positions forward of the CAO are loaded with 88" pallets with aisle

15.2 Dry Ice

Please see the Global Supplementary Operational Document **Dry Ice Consolidation table** for the current maximum allowed Dry Ice limits.

Dry Ice (ICE) and Live Animals (AVI)

There is no weight limit for the loading of Dry Ice (ICE) together with Live Animals (AVI) on the Main-deck.

15.3 Lithium Batteries

Please see the Global Supplementary Operational Document **Lithium Battery Loadability Consolidation Table** for the current UN3480 Section IA/IB (RBI), UN3090 Section IA/IB (RBM), UN3481 Section I (RLI), UN3091 Section I (RLM) load ability limits.

UNCONTROLLED DOCUMENT
UNCONTROLLED DOCUMENT

UNCONTROLLED DOCUMENT (21 NOVEMBER 2024 16:31:38)

UNCONTROLLED DOCUMENT

16. Messaging and Reporting

16.1 Messaging

Standard messaging rules apply.

16.2 Reporting

Standard reporting rules apply.

UNCONTROLLED DOCUMENT

UNCONTROLLED DOCUMENT

UNCONTROLLED DOCUMENT (21 NOVEMBER 2024 16:31:38)

17. Load Control Data

17.1 Standard Mass Additions

17.1.1 Additional Crew Members (ACM)

Maximum Number of ACMs:	5
Mass of ACM:	75 kg

17.1.2 Fly Away Kit (FAK) and Ballast

Fly Away Kit (FAK): To be confirmed by Operating Crew.

Ballast: To be confirmed by Operating Crew.

17.1.3 Minimum Fuel and Standard Taxi Fuel

Minimum Fuel:	Not Applicable
Standard Taxi Fuel:	200 kg

17.2 LMC Restrictions

Computer Load sheet Maximum LMC:	+/- 200 kg
Manual Load sheet Maximum LMC:	+/- 500 kg

17.3 Minimum Flight Weight

Minimum flight weight:	39,508 kg

For ferry flights, the following ballast payload shall be required:

- 500 Kg on position P12

UNCONTROLLED DOCUMENT
UNCONTROLLED DOCUMENT

UNCONTROLLED DOCUMENT (21 NOVEMBER 2024 16:31:38)

UNCONTROLLED DOCUMENT

18. Maximum Package Dimensions

18.1 Main Cargo Door

FORWARD PALLET UPRIGHT LOADING THROUGH MAIN CARGO DOOR

	WIDTH (IN.)												
	5	15	25	35	45	55	65	75	85	95	105	115	125
HEIGHT (IN.)	LENGTH (IN.)												
83	190	190	190	190	181	164	151						
80	190	190	190	190	190	181	165	152					
76	190	190	190	190	190	190	181	166	153				
72	190	190	190	190	190	190	190	178	164	152			
68	190	190	190	190	190	190	190	188	172	158			
64	190	190	190	190	190	190	190	190	180	165	153		
60	190	190	190	190	190	190	190	190	187	171	158	147	
56	190	190	190	190	190	190	190	190	190	176	162	151	
52	190	190	190	190	190	190	190	190	190	180	165	153	137
48	190	190	190	190	190	190	190	190	190	180	165	153	137
44	190	190	190	190	190	190	190	190	190	180	165	153	137
40	190	190	190	190	190	190	190	190	190	180	165	153	137
36	190	190	190	190	190	190	190	190	190	180	165	153	137
32	190	190	190	190	190	190	190	190	190	180	165	153	137
28	190	190	190	190	190	190	190	190	190	180	165	153	137
24	190	190	190	190	190	190	190	190	190	180	165	153	137
20	190	190	190	190	190	190	190	190	190	180	165	153	137
16	190	190	190	190	190	190	190	190	190	180	165	153	137
12	190	190	190	190	190	190	190	190	190	180	165	153	137
8	190	190	190	190	190	190	190	190	190	180	165	153	137
4	190	190	190	190	190	190	190	190	190	180	165	153	137
2	190	190	190	190	190	190	190	190	190	180	165	153	137

NOTE: Subtract roller height and pallet thickness if applicable.

UNCONTROLLED DOCUMENT

UNCONTROLLED DOCUMENT (21 NOVEMBER 2024 16:31:38)

UNCONTROLLED DOCUMENT

UNCONTROLLED DOCUMENT

AFT PALLET UPRIGHT LOADING THROUGH MAIN CARGO DOOR

	WIDTH (IN.)												
	5	15	25	35	45	55	65	75	85	95	105	115	125
HEIGHT (IN.)	LENGTH (IN.)												
83	321	267	230	202	181	164	151						
80	383	311	263	228	202	181	165	152					
76	468	367	303	258	226	201	181	166	153				
72	565	426	343	288	249	219	197	178	164	152			
68	654	478	377	312	267	234	208	188	172	158			
64	772	540	417	340	287	249	221	198	180	165	153		
60	880	594	449	362	303	262	230	206	187	171	158	147	
56	905	657	486	386	321	275	241	214	193	176	162	151	
52	905	701	511	402	332	283	247	219	197	180	165	153	143
48	905	701	511	402	332	283	247	219	197	180	165	153	143
44	905	701	511	402	332	283	247	219	197	180	165	153	143
40	905	701	511	402	332	283	247	219	197	180	165	153	143
36	905	701	511	402	332	283	247	219	197	180	165	153	143
32	905	701	511	402	332	283	247	219	197	180	165	153	143
28	905	701	511	402	332	283	247	219	197	180	165	153	143
24	905	701	511	402	332	283	247	219	197	180	165	153	143
20	905	701	511	402	332	283	247	219	197	180	165	153	143
16	905	701	511	402	332	283	247	219	197	180	165	153	143
12	905	701	511	402	332	283	247	219	197	180	165	153	143
8	905	701	511	402	332	283	247	219	197	180	165	153	143
4	905	701	511	402	332	283	247	219	197	180	165	153	143
2	905	701	511	402	332	283	247	219	197	180	165	153	143

NOTE: Subtract roller height and pallet thickness if applicable.

UNCONTROLLED DOCUMENT

UNCONTROLLED DOCUMENT (21 NOVEMBER 2024 16:31:38)