UNCONTROLLED DOCUMENT

UNCONTROLLED DOCUMENT

NPT ATR72F
West Atlantic UK ATR-72F

Revision: 6
Date: 08 October 2024

1 West Atlantic UK ATR-72F Registrations
2 Aircraft Dimensions
3 Aircraft Servicing Points and Specifications
4 Ground Support Equipment
5 Cone Positioning
6 Standard Turnaround Times
7 Safety Areas
8 Strong Wind Conditions
9 Aircraft Door Dimensions
10 Compartment Classification and Air-Conditioning
11 Aircraft Cabin Contour Dimensions
12 Maximum Position Weights
13 Aircraft ULD Compatibility
14 Loading and Un-Loading
15 Aircraft Departure
16 Rigid, Oversized and Special Loads
17 Restricted Commodities Loading
18 Messaging and Reporting
19 Load Control Data
20 Maximum Package Dimensions

UNCONTROLLED DOCUMENT (08 OCTOBER 2024 15:01:07)

Page	Date	Comment
16	08 October 2024	Load/un-load sequence images updated to match text instruction. *(Minor)*
20	08 October 2024	Guidance on the handling of special loads information added. *(Minor)*

UNCONTROLLED DOCUMENT

UNCONTROLLED DOCUMENT

UNCONTROLLED DOCUMENT

1. West Atlantic UK ATR-72F Registrations

IATA Designator:	-
ICAO Designator:	NPT
Valid for:	**GCLNK (Containerized)** **GNPTF, GCLXT (Loose Loaded)**

UNCONTROLLED DOCUMENT

UNCONTROLLED DOCUMENT

UNCONTROLLED DOCUMENT (08 OCTOBER 2024 15:01:08)

UNCONTROLLED DOCUMENT

2. Aircraft Dimensions

All dimensions in meters.

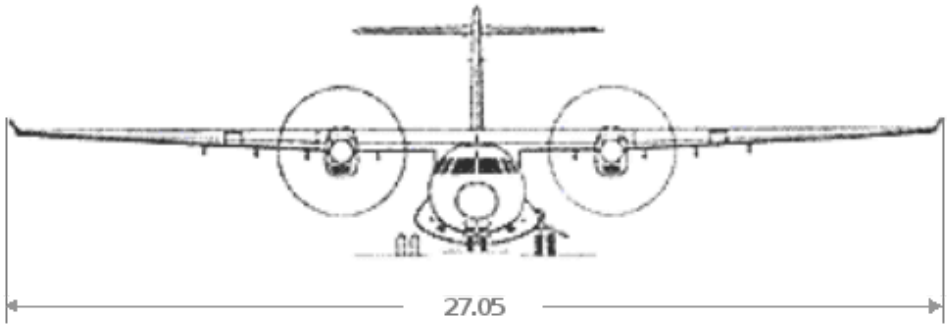

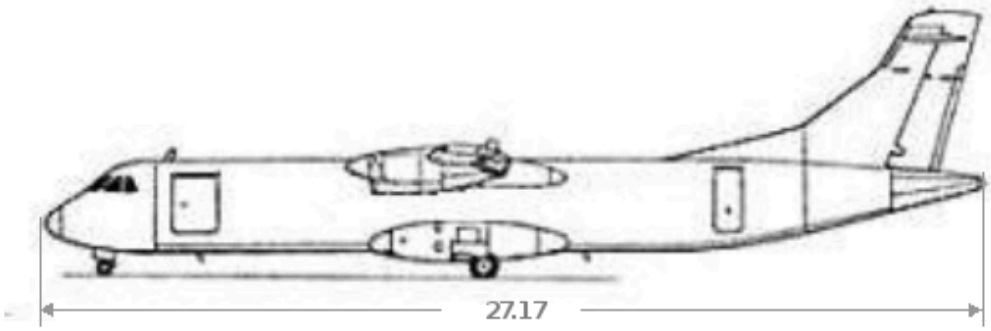

UNCONTROLLED DOCUMENT

UNCONTROLLED DOCUMENT

UNCONTROLLED DOCUMENT (08 OCTOBER 2024 15:01:08)

3. Aircraft Servicing Points and Specifications

3.1 Servicing Points

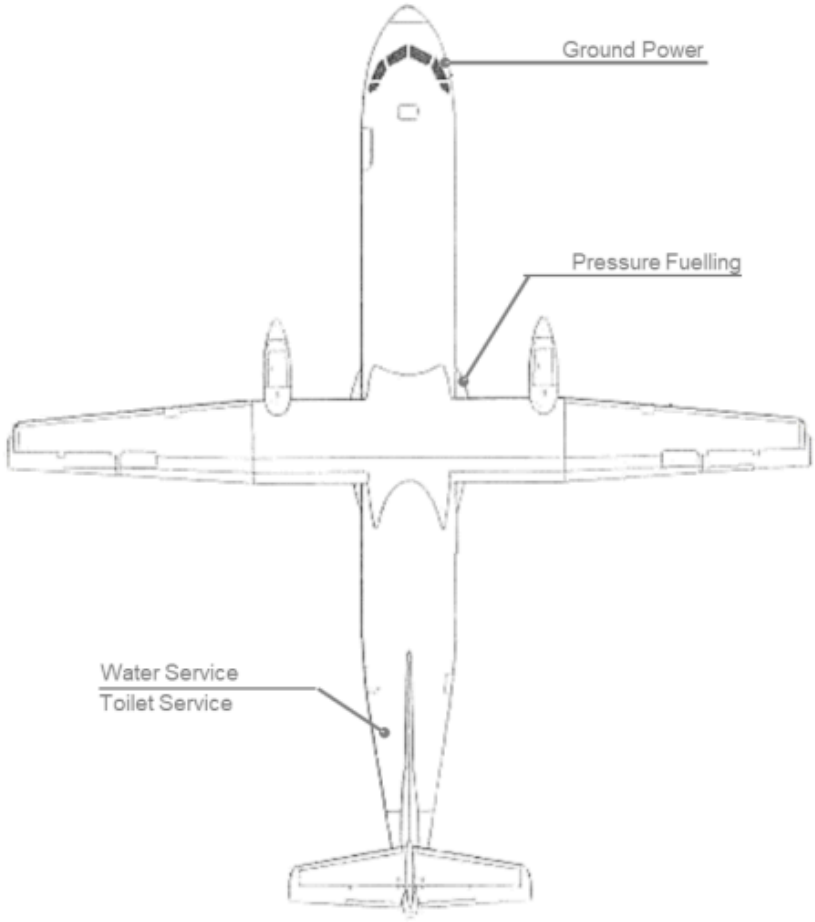

3.2 Servicing Specifications

System	Requirements	Notes
Ground Power Unit	28V DC	
Fuel	Jet A1	

UNCONTROLLED DOCUMENT
UNCONTROLLED DOCUMENT

UNCONTROLLED DOCUMENT (08 OCTOBER 2024 15:01:08)

UNCONTROLLED DOCUMENT

4. Ground Support Equipment

4.1 Positioning of GSE

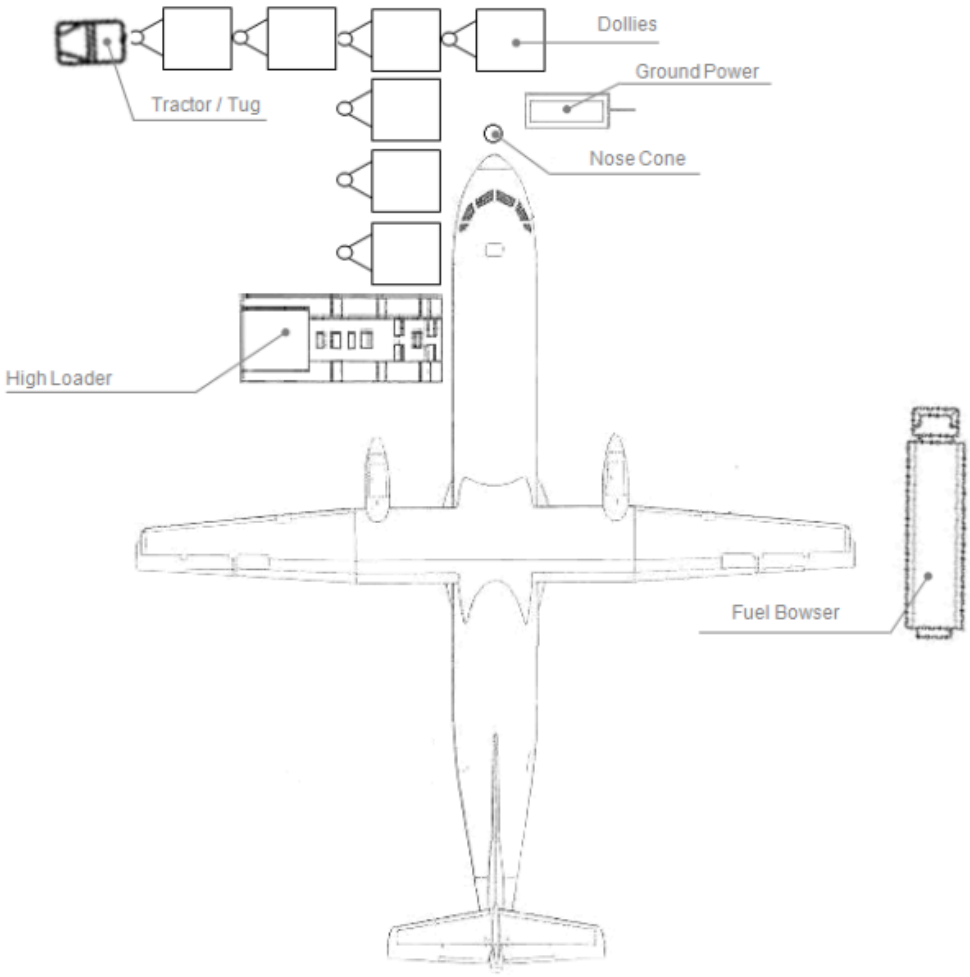

4.2 GSE Requirements

GSE	Type	Quantity
High Loader	Standard **Must** be fitted with “truck-height” option	1
Ground Power Unit	Diesel, Electric or Ground-Power	1
Tractor	N/A	2
Dolly Wagon Main-deck	108”/88” capable	Up to 5
Belly Container / Wagon	As required	According to load

UNCONTROLLED DOCUMENT (08 OCTOBER 2024 15:01:08)

5. Cone Positioning

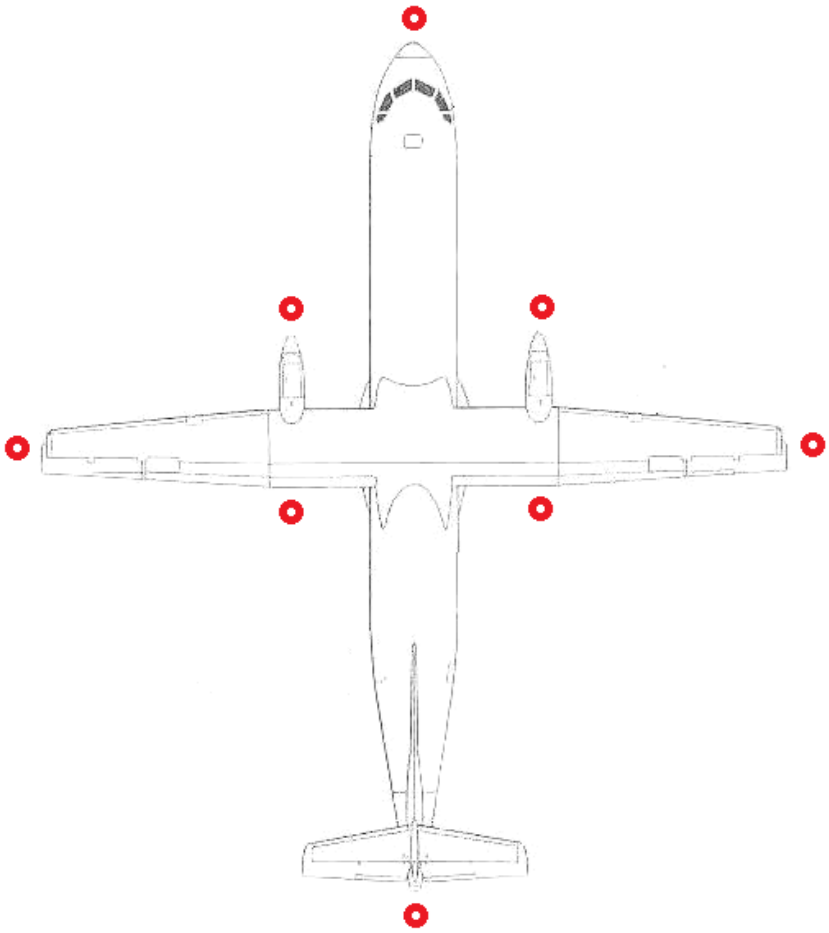

Cones shall be placed a maximum of 1m from the aircraft in the positions indicated in the diagram above.

UNCONTROLLED DOCUMENT
UNCONTROLLED DOCUMENT

6. Standard Turnaround Times

Turn-around time for a transit stop: 00:25 hour (partial off- and on-load)
Turn-around time for an end stop: 00:35 hour (full off- and on-load)

UNCONTROLLED DOCUMENT
UNCONTROLLED DOCUMENT

7. Safety Areas

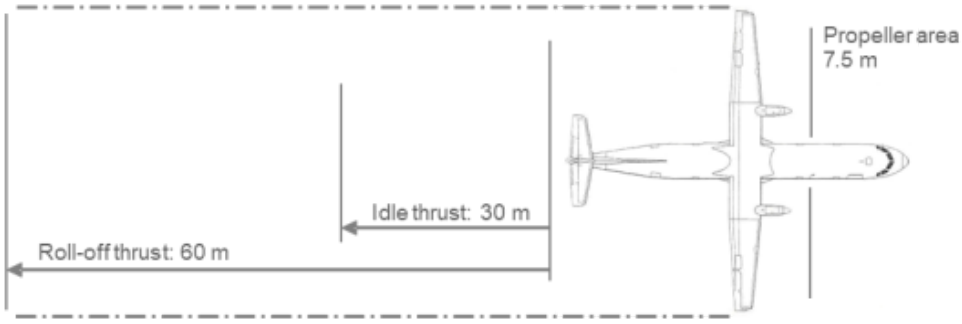

UNCONTROLLED DOCUMENT
UNCONTROLLED DOCUMENT

UNCONTROLLED DOCUMENT (08 OCTOBER 2024 15:01:08)

UNCONTROLLED DOCUMENT

8. Strong Wind Conditions

If the wind conditions on the ramp reach the following speeds, the corresponding actions shall be taken.



Wind Speed	Action
Up to 35 knots	Normal Operations: All doors can be opened and left open
More than 35 knots	All open doors shall be closed immediately
More than 35 knots	If the direction of the wind is not into (perpendicular to) the door, the door may be opened and remain open only with the explicit permission from the flight crew.

UNCONTROLLED DOCUMENT

UNCONTROLLED DOCUMENT

UNCONTROLLED DOCUMENT (08 OCTOBER 2024 15:01:08)

9. Aircraft Door Dimensions

West Atlantic UK operate ATR72 in both containerized (GCLNK) or loose-loaded (GNPTF, GCLXT) freighter configuration. The containerized variant has a Large Cargo Door on the port side towards the front of the aircraft, while the loose-loaded variant has a Main Cargo Door.

Door width, height, and sill height are defined as follows.

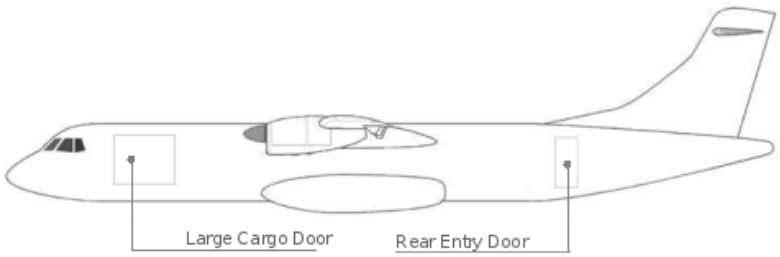

(This drawing is for illustration purposes only and may not be an exact representation of this aircraft type)

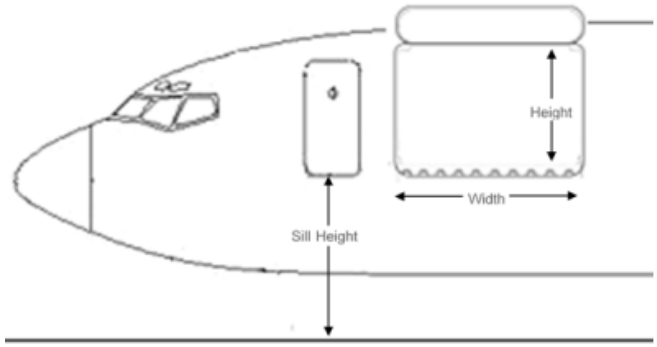

All dimensions are in centimetres (cm).

Door	Door Width	Door Height	Min. Door Sill Height	Max. Door Sill Height
Large Cargo Door	303	204	100	110
Main Cargo Door	129	153	100	110
Rear Entry Door	78	180	100	110

9.1 Door Sill Guards



This aircraft is equipped with removable sill guards, to protect the sill during loading and unloading of ULDs. The removable sill guard shall be correctly stowed when not in use.

Prior to loading/un-loading, the sill guard shall be removed from the protector bag attached to the bulkhead (see image), and fixed into position on the sill. On completion of loading/un-loading and prior to closing the Large Cargo Door, the sill guard shall be placed inside the protector bag and re-attached to the bulkhead.

UNCONTROLLED DOCUMENT
UNCONTROLLED DOCUMENT

UNCONTROLLED DOCUMENT (08 OCTOBER 2024 15:01:08)

9.2 Cargo Door Strut

These aircraft are fitted with a large cargo door strut used to provide stability for the open cargo door. The strut must be used for loading/un-loading operations. The strut is located inside the large cargo door as pictured below.



After opening the cargo door, remove the strut lower end rod security pin to free the strut, position the strut to reach the established location to engage the lower end rod to pin located on surround and install the security pin.



UNCONTROLLED DOCUMENT
UNCONTROLLED DOCUMENT

UNCONTROLLED DOCUMENT (08 OCTOBER 2024 15:01:08)

UNCONTROLLED DOCUMENT

10. Compartment Classification and Air-Conditioning



10.1 Compartment Classification

Compartment		Features
All ULD Positions (C1 thru C5)	Position C1 loaded with 108”/88” ULD **with** aisle	- Classification **E**
		- Pressurisation
		- Smoke detection
		- Position **A only** is **Accessible** during flight
	Position C1 loaded with 108”/88” ULD **without** aisle	- Classification **E**
		- Pressurisation
		- Smoke detection
		- **Entire compartment** is **In-accessible** during flight
Bulk Compartment	Loose loaded compartment	- Classification **E**
		- Pressurisation
		- Smoke detection
		- **In-accessible** during flight

10.2 Air-Conditioning

	Main-deck
Temperature	15C-32C
Heating	Yes
Heat Adjust	Yes
Cooling	Yes
Ventilation	Yes

UNCONTROLLED DOCUMENT (08 OCTOBER 2024 15:01:08)

UNCONTROLLED DOCUMENT

11. Aircraft Cabin Contour Dimensions

11.1 Aircraft Contour Zones

The aircraft has only one contour zones: CI



11.1.1 Contour CI

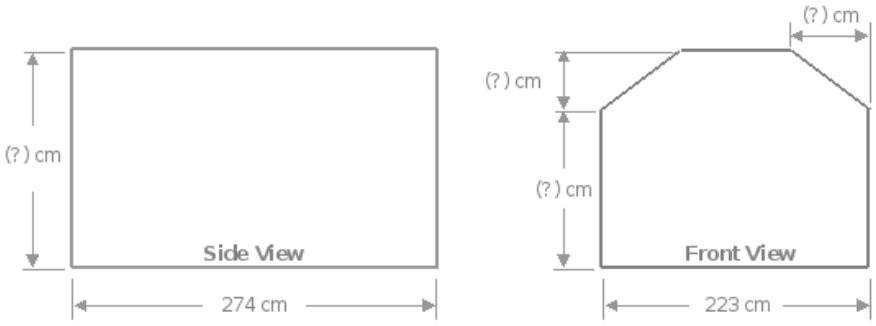

11.1.2 Cargo Compartment Dimensions



UNCONTROLLED DOCUMENT

UNCONTROLLED DOCUMENT

UNCONTROLLED DOCUMENT (08 OCTOBER 2024 15:01:08)

UNCONTROLLED DOCUMENT

12. Maximum Position Weights

12.1 Maximum Main-deck ULD Weights in Kilograms

Valid for registration GCLNK:

	ULD Position					
ULD Size	C1	C2	C3	C4	C5	BULK
108”/88”	1586	1637	1635	1638	1634	
BULK						750
Max floor load (Kg/m2)	400					

Valid for registration GNPTF, GCLXT:

	ULD Position					
ULD Size	C1	C2	C3	C4	C5	C6
BULK	1600	1600	1600	1600	1600	750
Max floor load (Kg/m2)	400					

UNCONTROLLED DOCUMENT

UNCONTROLLED DOCUMENT (08 OCTOBER 2024 15:01:08)

13. Aircraft ULD Compatibility

13.1 Main Deck Configuration



Configuration 1: 5 Longitudinal 108”/88” ULDs

13.2 Standard Main Deck Container Configuration

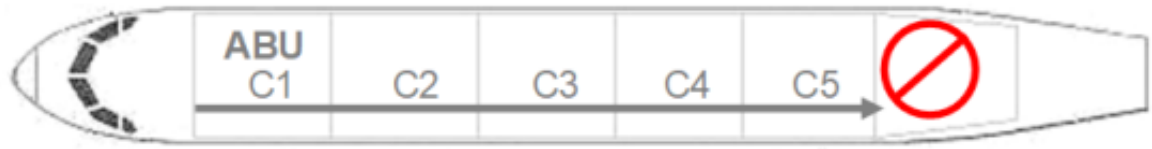

13.3 Main Deck ULD Compatibility

The following ULD type loading restrictions apply. The ULD type can be loaded on positions marked with a ‘Y’. The ULD type cannot be loaded on positions marked with a ‘N’.

		ULD Type	
	Pos	ABU	PBJ
Configuration 1.	C1	Y	Y
	C2	Y	Y
	C3	Y	Y
	C4	Y	Y
	C5	Y	Y

UNCONTROLLED DOCUMENT
UNCONTROLLED DOCUMENT

UNCONTROLLED DOCUMENT (08 OCTOBER 2024 15:01:08)

14. Loading and Un-Loading

14.1 Containerized Variant (GCLNK)

14.1.1 Un-Loading Sequence

Step 1: Un-load the Bulk Compartment

Step 2: Un-load the ULDs on the main deck in the following numbered sequence, **and respect standard stage un-loading method**.



14.1.2 Loading Sequence

Step 1: Load the ULDs on the main deck in the following numbered sequence, **and respect standard stage loading method**.



Step 2: Load the Bulk Compartment.

14.2 Loose-Loaded Variant (GNPTF, GCLXT)

14.2.1 Un-Loading Sequence

Compartments 5 and 6 shall be un-loaded through the Rear Entry Door while the remaining comparments shall be un-loaded through the Main Cargo Door. The aircraft shall be un-loaded in the following sequence:



When the aircraft is full, compartments 5 and 6 may be un-loaded simultaneously with compartments 1, 2 and 3.

14.2.2 Loading Sequence

Compartments 5 and 6 shall be loaded through the Rear Entry Door while the remaining comparments shall be loaded through the Main Cargo Door. The aircraft shall be loaded in the following sequence:



UNCONTROLLED DOCUMENT
UNCONTROLLED DOCUMENT

UNCONTROLLED DOCUMENT (08 OCTOBER 2024 15:01:08)

14.3 Loading Notes

14.3.1 Tail Post

Prior to un-loading/loading ensure the tail post has been installed (see image below). When not installed underneith the aircraft, the tail post is located at the stowage area on the bulk head. The Tail Post must be removed and stowed before departure.



14.3.2 Tail-Tipping

To avoid tail-tipping the aircraft, extreme caution must be exercised. **No more than two people are allowed in Compartment F at the same time.**

14.3.3 Removing the 9G Crash Net

The 9G crash net shall be removed prior to commencing offload, and shall be refitted to the aircraft after loading has been completed.

14.3.4 Usage of High Loader

The containerised ATR72 may be offloaded and loaded by using a standard High-Loader. The High-Loader must be positioned perpendicular to the fuselage and the rear platform of the High-Loader must be used to transfer ULDs to the dollies.

One or multiple dollies may be positioned manually in a dolly train next to the High-Loader. This dolly train can be approached by a tractor with dollies to collect or deposit ULDs. Sufficient clearance must be kept between the aircraft and the tractor with dollies at all times.

See Positioning of GSE for the diagram of the correct GSE positioning.

To ensure correct positioning and prevent possible damage to the aircraft, extreme caution must be exercised at all times and the following safety precautions must be followed:

- When positioning and de-positioning the High-Loader, two marshallers will be used to ensure clearance to the fuselage, engine and any other part of the aircraft
- A marshaller should be positioned to monitor the raising and lowering of the High-Loader rear platform throughout the operation. This is to ensure the High-Loader platform remains clear of the fuselage at all times.

When positioned at the aircraft, the hi-loader shall not be used to move ULDs from the rear platform of the hi-loader (positioned next to the aircraft) to the front platform of the hi-loader. This action requires raising the rear platform above the cargo door sill height and presents a significant damage risk to the aircraft.

14.3.5 Parallel Dolly Train Operation

Due to the limited clearance between ground and engine propellers, parallel dolly-train un-load is not allowed on this aircraft type.

UNCONTROLLED DOCUMENT (08 OCTOBER 2024 15:01:08)

UNCONTROLLED DOCUMENT

14.3.6 Loading Heavy items or Dangerous Goods in the Loose-Loaded variant

Heavy and bulky items must be secured to the aircraft floor using straps. Load items exceeding 150Kg shall only be carried in compartments 1 through to 4.

Dangerous Goods must be secured to the aircraft floor.

See **4.5.7 - Securing of Load** for more guidance on restraining loads in bulk holds.

UNCONTROLLED DOCUMENT

UNCONTROLLED DOCUMENT

UNCONTROLLED DOCUMENT (08 OCTOBER 2024 15:01:08)

UNCONTROLLED DOCUMENT

15. Aircraft Departure

During departure proceedings of the aircraft, communications between ground crew and flight crew shall be conducted using a headset, as per standard aircraft departure procedures in **4.6 - Aircraft Departure**.

UNCONTROLLED DOCUMENT

UNCONTROLLED DOCUMENT

UNCONTROLLED DOCUMENT (08 OCTOBER 2024 15:01:08)

16 Rigid, Oversized and Special Loads

For guidance on the handling of special loads, please refer to the Special Loads Regional Contact Instructions outlined in Chapter 6 **6.12.22.3 - Determining Loadability of Special Loads**. Where direct operator approval is required, the Regional Airside Team will liaise with Global Airside as needed.

16.1 Floating / Heavy Pallets

ULDs which are heavier than the standard allowed maximum gross weight must not be carried on this aircraft.

16.2 Piercing Cargo

Piercing cargo may not be loaded on the first and/or last loaded position on the aircraft.

16.3 Aircraft Engines

This aircraft type does not support the carriage of aircraft engines.

16.4 Live Animals

16.4.1 Horses

This aircraft type does not support the carriage of horses.

16.4.2 Other Live Animals

The following table provides a list of commonly transported animals. If there is a requirement to transport animals not listed below, contact your Special Loads Regional contact for more information.

	Main-Deck
Day-old chickens	Yes
Dogs or Cats	
Small Mammals or Birds	
Tropical Fish	
Reptiles or Amphibians	
Eels	
Crustaceans or Molluscs	
Insects	
Hatching eggs	

UNCONTROLLED DOCUMENT
UNCONTROLLED DOCUMENT

UNCONTROLLED DOCUMENT (08 OCTOBER 2024 15:01:08)

17 Restricted Commodities Loading

17.1 Radioactive (RRY), Magnetised (MAG) and Cargo Aircraft Only (CAO)

The following Dangerous Good type loading restrictions apply. The Dangerous Good type can be loaded on positions marked with a 'Y'. The Dangerous Good type cannot be loaded on positions marked with a 'N'.

	Position					
DG Type	1	2	3	4	5	Bulk
MAG	N	N	N	Y	Y	Y
CAO	Y	N	N	N	N	N
RRY (Class 7)	N	N	N	N	Y	N

Note: Cargo Aircraft Only (CAO) can be loaded on Main Deck position C1 provided it is loaded accessible. Accessible means that:

- The CAO is loaded on a pallet with aisle.

17.2 Dry Ice

Please see the Global Supplementary Operational Document **Dry Ice Consolidation table** for the current maximum allowed Dry Ice limits.

17.3 Dry Ice (ICE) and Live Animals (AVI)

There is no additional weight limit for the loading of Dry Ice (ICE) together with Live Animals (AVI) on the Main-deck.

When loading AVI and ICE together in the main-deck, **keep a minimum distance of one loading position, and load AVI forward of ICE.**

Load the AVI higher than the ICE.

17.4 Lithium Batteries

Please see the Global Supplementary Operational Document **Lithium Battery Loadability Consolidation Table** for the current UN3480 Section IA/IB (RBI), UN3090 Section IA/IB (RBM), UN3481 Section I (RLI), UN3091 Section I (RLM) load ability limits.

UNCONTROLLED DOCUMENT
UNCONTROLLED DOCUMENT

18. Messaging and Reporting

18.1 Messaging

Standard messaging rules apply.

18.2 Reporting

Standard reporting rules apply.

UNCONTROLLED DOCUMENT
UNCONTROLLED DOCUMENT

UNCONTROLLED DOCUMENT

19. Load Control Data

19.1 Standard Mass Additions

19.1.1 Additional Crew Members (ACM)

Maximum Number of ACMs:	1
Mass of ACM:	85 kg

19.1.2 Fly Away Kit (FAK) and Ballast

Fly Away Kit (FAK):	Not carried as standard.
Ballast:	Not carried as standard

19.2 Minimum Fuel and Standard Taxi Fuel

Minimum Fuel:	N/A
Standard Taxi Fuel:	30 kg

19.3 LMC Restrictions

Computer Load sheet Maximum LMC:	+/- 215 kg
Manual Load sheet Maximum LMC:	+/- 215 kg

UNCONTROLLED DOCUMENT

UNCONTROLLED DOCUMENT

UNCONTROLLED DOCUMENT (08 OCTOBER 2024 15:01:08)

UNCONTROLLED DOCUMENT

20. Maximum Package Dimensions

No diagram or table has been made available. Please contact operator for information.

UNCONTROLLED DOCUMENT

UNCONTROLLED DOCUMENT

UNCONTROLLED DOCUMENT (08 OCTOBER 2024 15:01:08)