UNCONTROLLED DOCUMENT

UNCONTROLLED DOCUMENT

NPT B733SF
West Atlantic UK B737-300SF

Revision: 3
Date: 21 November 2024

1 West Atlantic UK Boeing 737-300SF Registrations
2 Aircraft Dimensions
3 Aircraft Servicing Points and Specifications
4 Ground Support Equipment
5 Chocking during Push-back
6 Standard Turnaround Times
7 Safety Areas
8 Strong Wind Conditions
9 Aircraft Door Dimensions
10 Compartment Classification and Air-Conditioning
11 Aircraft Cabin Contour Dimensions
12 Maximum Position Weights
13 Aircraft ULD Compatibility
14 Loading and Un-Loading
15 Rigid, Oversized and Special Loads
16 Restricted Commodities Loading
17 Messaging and Reporting
18 Load Control Data
19 Maximum Package Dimensions

UNCONTROLLED DOCUMENT (21 NOVEMBER 2024 16:37:15)

Page	Date	Comment
15	21 November 2024	ULD types no longer available in the network removed. *(Minor)*
18	21 November 2024	Guidance on the handling of special loads information added. *(Minor)*
19	21 November 2024	Global Airside replaced with, Special Loads Regional Contact. *(Minor)*

UNCONTROLLED DOCUMENT

UNCONTROLLED DOCUMENT

1. West Atlantic UK Boeing 737-300SF Registrations

IATA Designator:	-
ICAO Designator:	NPT
Valid for:	**GJMCL, GJMCM, GJMCO, GJMCP, GJMCT, GJMCU.**

UNCONTROLLED DOCUMENT
UNCONTROLLED DOCUMENT

2. Aircraft Dimensions

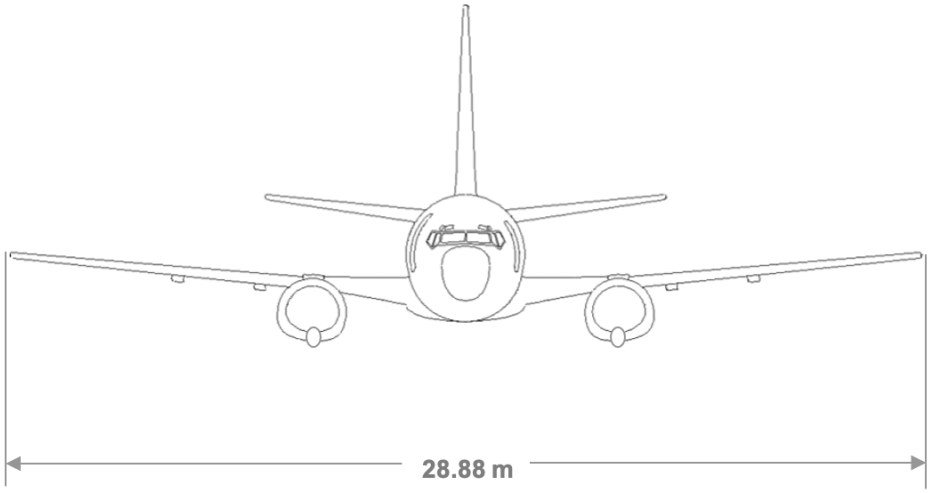

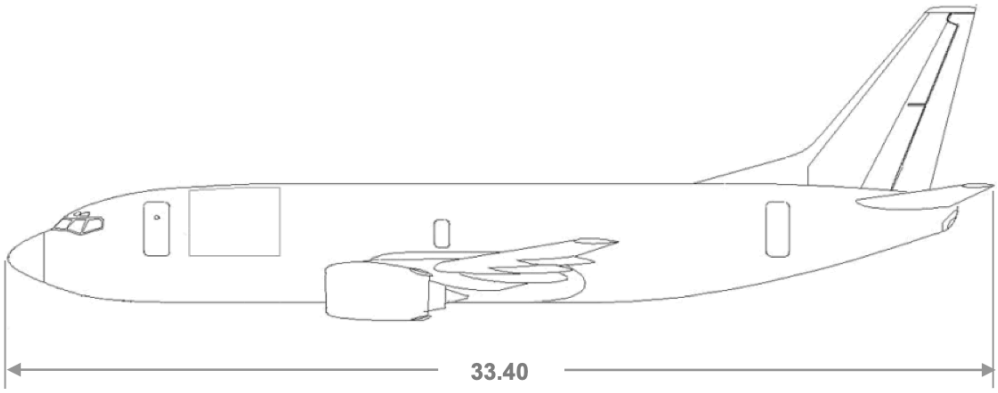

UNCONTROLLED DOCUMENT
UNCONTROLLED DOCUMENT

UNCONTROLLED DOCUMENT (21 NOVEMBER 2024 16:37:15)

UNCONTROLLED DOCUMENT

UNCONTROLLED DOCUMENT

UNCONTROLLED DOCUMENT

3. Aircraft Servicing Points and Specifications

3.1 Servicing Points

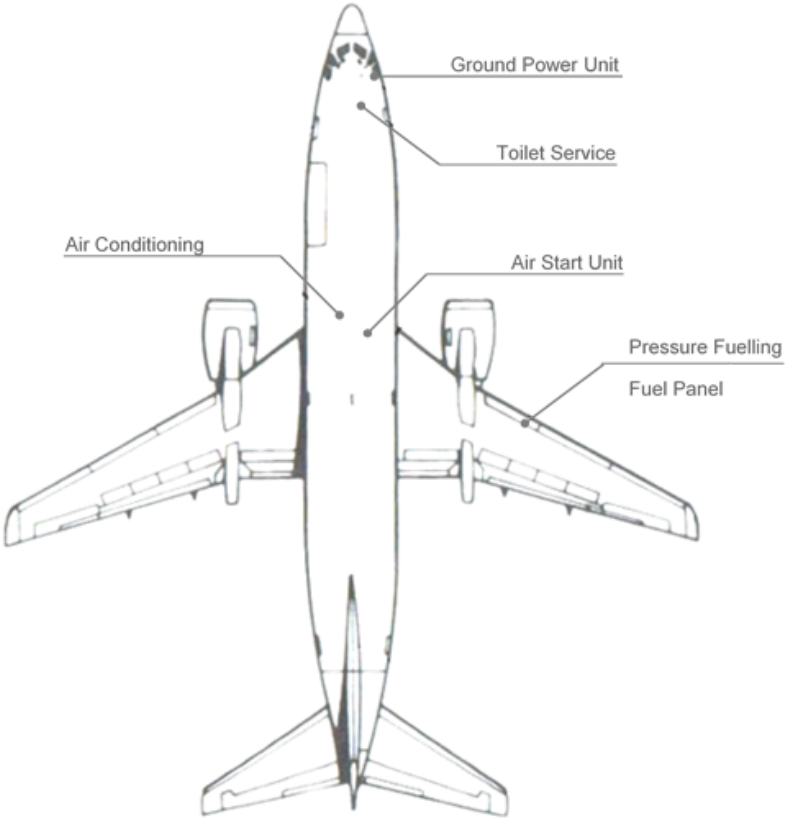

3.2 Servicing Specifications

System	Requirements	Notes
Ground Power Unit	115/200V AC / 60 kVA / 400 Hz	
Fuel	Jet A1	Fuel Control Panel **on RH wing only**
Air Condition Unit	Maximum Flow Rate 210 ppm	1 ACU inlet available
Air Start Unit	Minimum Capacity 120-145 ppm Max. / Min. pressure 45 / 30 psi	1 ASU inlet available.

UNCONTROLLED DOCUMENT (21 NOVEMBER 2024 16:37:15)

4. Ground Support Equipment

4.1 Positioning of GSE

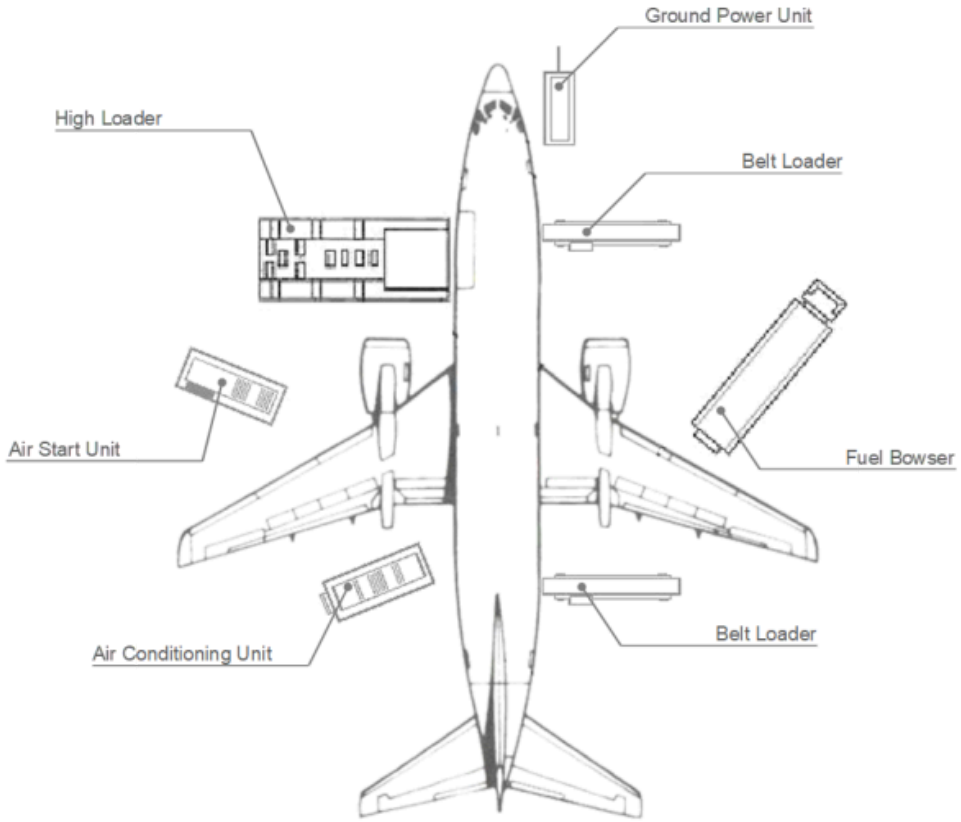

4.2 GSE Requirements

GSE	Type	Quantity
High Loader	Standard	1
Crew stairs*	Platform height 2.62 – 2.77 meters	1
Ground Power Unit	Diesel, Electric or Ground-Power	1
Air Start Unit	Standard	1
Belt Loader	Standard	1 or 2
Tractor	N/A	4
Dolly Wagon Main-deck	125”/88” & 108”/88” capable	Up to 8
Belly Container / Wagon	As required	According to load

UNCONTROLLED DOCUMENT
UNCONTROLLED DOCUMENT

UNCONTROLLED DOCUMENT (21 NOVEMBER 2024 16:37:15)

5. Chocking during Push-back

Push-back with Tow Bar

On completion of push-back and once the aircraft crew has confirmed the parking brakes are set, chocks shall be placed in front of the nose gear wheel. The chocks shall be removed only when the tow bar has been disconnected from the aircraft and the steering bypass pin removed.

Push-back with Tow Bar-less

On completion of push-back using a Tow Bar-less tractor, the aircraft crew shall confirm that the parking brakes are set, after which the tractor shall pull away in front of the aircraft. Once the tractor has pulled away, chocks shall be placed in front of the nose gear wheel. The chocks shall be removed only when the steering bypass pin has been removed.

UNCONTROLLED DOCUMENT
UNCONTROLLED DOCUMENT

UNCONTROLLED DOCUMENT

6. Standard Turnaround Times

Turn-around time for a transit stop:	00:35 hour (partial off- and on-load)
Turn-around time for an end stop:	00:50 hour (full off- and on-load)

UNCONTROLLED DOCUMENT

UNCONTROLLED DOCUMENT

UNCONTROLLED DOCUMENT (21 NOVEMBER 2024 16:37:15)

7. Safety Areas

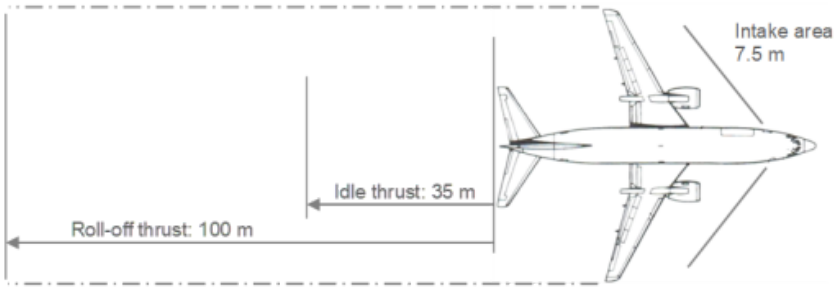

UNCONTROLLED DOCUMENT
UNCONTROLLED DOCUMENT

UNCONTROLLED DOCUMENT (21 NOVEMBER 2024 16:37:15)

UNCONTROLLED DOCUMENT

8. Strong Wind Conditions

If the wind conditions on the ramp reach the following speeds, the corresponding actions shall be taken.

Wind Speed	Action
Up to 40 knots	Normal Operations: All doors can be opened and left open
More than 40 knots	Do not open additional doors
More than 40 knots	All open doors shall be closed immediately

UNCONTROLLED DOCUMENT

UNCONTROLLED DOCUMENT

UNCONTROLLED DOCUMENT (21 NOVEMBER 2024 16:37:15)

9. Aircraft Door Dimensions

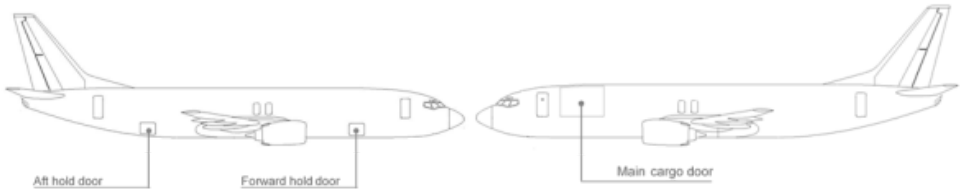

Door width, height, and sill height are defined as follows.

(This drawing is for illustration purposes only and may not be an exact representation of this aircraft type)

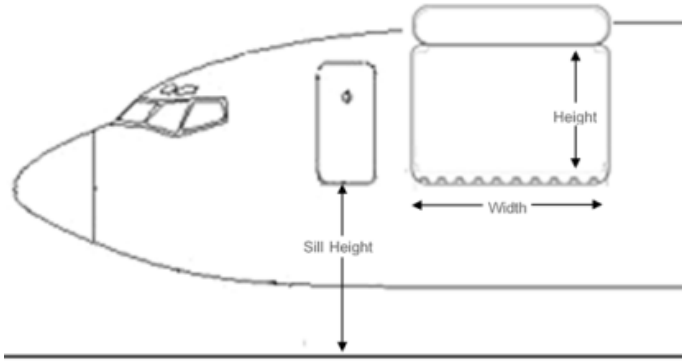

All dimensions are in centimetres (cm).

Valid for registrations: **GJMCL, GJMCM, GJMCO, GJMCP, GJMCT.**

Door	Door Width	Door Height	Min. Door Sill Height	Max. Door Sill Height
Crew Door	-	-	-	-
Main Deck	355	219	265	280
Forward Hold	121	89	127	140
Aft Hold	122	89	137	137

Valid for registration: **GJMCU**

Door	Door Width	Door Height	Min. Door Sill Height	Max. Door Sill Height
Crew Door	-	-	-	-
Main Deck	341	219	265	280
Forward Hold	121	89	127	140
Aft Hold	122	84	137	137

Note: For registration **GJMCU**, the flight crew will operate the main cargo door.

UNCONTROLLED DOCUMENT (21 NOVEMBER 2024 16:37:15)

UNCONTROLLED DOCUMENT

10. Compartment Classification and Air-Conditioning

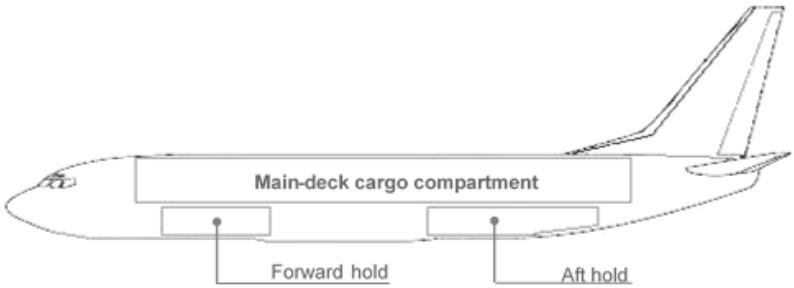

10.1 Compartment Classification

Compartment		Features
Main-deck	Position A loaded with 88" ULD **with** 50 cm (18") isle **or** Position B loaded with 108/88' ULD	- Classification **B**
		- Pressurisation
		- Smoke Detection
		- **Accessible** during flight
	Position A loaded with 88" ULD **without** 50 cm (18") aisle	- Classification **E**
		- Pressurisation
		- Smoke Detection
		- **In-accessible** during flight
Lower-deck All Compartments		- Classification **C**
		- Pressurisation
		- Smoke Detection
		- Fire Suppression
		- **In-accessible** during flight

10.2 Air-Conditioning

	Main-deck	Forward Hold	Aft Hold
Temperature	1C to 22C	Max 3C*	Max 3C*
Heating	Yes	No	
Heat adjust			
Cooling			
Ventilation		Yes	

*Temperature in the Forward and Aft Holds depend on the Main-deck heating but will never be more than 3C. No separate heating of the lower-deck.

UNCONTROLLED DOCUMENT (21 NOVEMBER 2024 16:37:15)

UNCONTROLLED DOCUMENT

11. Aircraft Cabin Contour Dimensions

11.1 Aircraft Layout Type 1

The aircraft is divided into three contour zones: CI, CII and CIII.



11.1.1 Contour CI

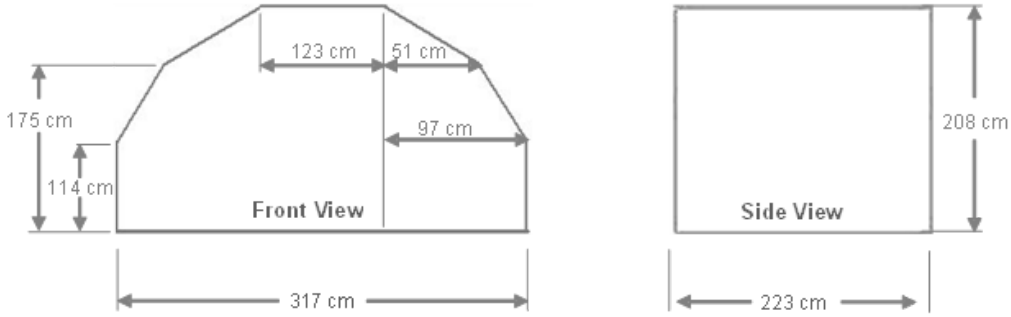

11.1.2 Contour CII

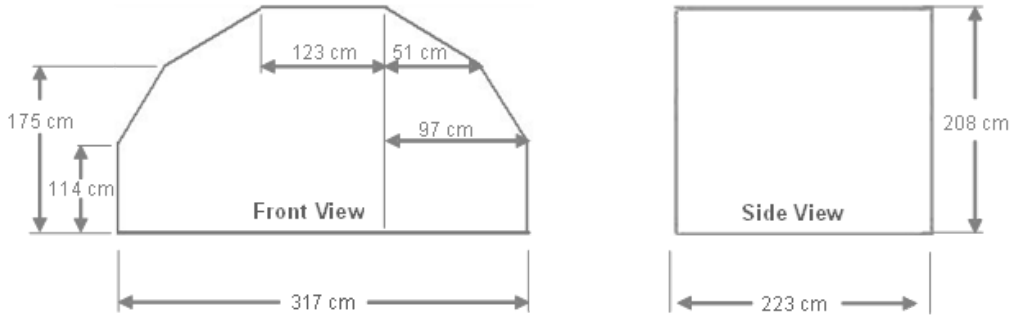

UNCONTROLLED DOCUMENT

UNCONTROLLED DOCUMENT

UNCONTROLLED DOCUMENT (21 NOVEMBER 2024 16:37:15)

UNCONTROLLED DOCUMENT

11.1.3 Contour CIII

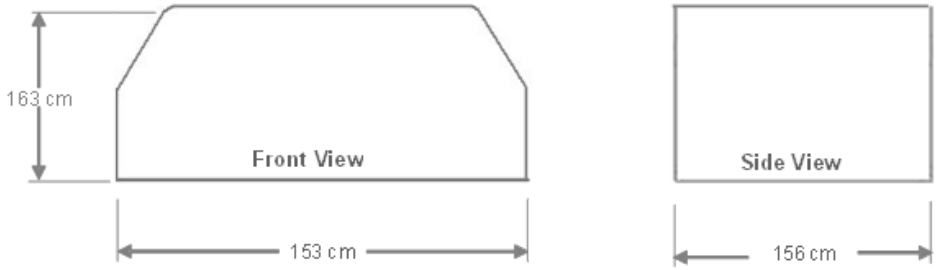

UNCONTROLLED DOCUMENT

UNCONTROLLED DOCUMENT

UNCONTROLLED DOCUMENT (21 NOVEMBER 2024 16:37:15)

UNCONTROLLED DOCUMENT

12. Maximum Position Weights

12.1 Maximum Main-deck ULD Weights in Kilograms

Valid for registrations: **GJMCL, GJMCM, GJMCO, GJMCP, GJMCT.**

	ULD Position								
ULD Size	A	B	C	D	E	F	G	H	J*
108”/88”	2585			4173		2286			
125”/ 88”	2585			4173		2286			1587
53"/88"									
61.5”/60.4" **									

* Pos. J is not useable for cargo in GJMCL as this position contains a fixed seat pallet.

**May require engineering lock adjustment to accommodate 60.4”/61.5” ULD’s.

Valid for registration: **GJMCU.**

	ULD Position								
ULD Size	A	B	C	D	E	F	G	H	J
108”/88”	2540			4042	3288	2268		2132	
125”/ 88”	2540			4042	3288	2268		2132	907
53"/88"									
61.5”/60.4" **									

**May require engineering lock adjustment to accommodate 60.4”/61.5” ULD’s.

12.2 Maximum Total Main-deck Load

9G Barrier Limit: 20,412 Kg

12.3 Maximum Lower-deck Compartment Weights in Kilograms

Valid for all registrations:

	Forward hold		Aft hold	
Compartment	1	2	3	4
Max. weight (kg)	1151	1118	2337	1132
Max. hold weight (kg)	2269		3469	
Total LD hold weight (kg)	5738			

Note: The maximum floor loading capacity in the hold is 733 kg/m or 150 lbs/sq. foot.

UNCONTROLLED DOCUMENT (21 NOVEMBER 2024 16:37:15)

UNCONTROLLED DOCUMENT

13. Aircraft ULD Compatibility

The following ULD type loading restrictions apply. The ULD type can be loaded on positions marked with a 'Y'. The ULD type cannot be loaded on positions marked with a 'N'.



Configuration 1: 8 Lateral 125"/88" or 108"/88" and 1 Lateral 88"/53" positions.

		ULD Type											
	Pos	AAA	AAC	AAJ	AEH	AEP	AKE	AYY	LAK	LAY	PAG	PEA	PEB
Configuration 1.	A	Y	Y1	Y	N	N	N	N	Y	Y	Y	N	N
	B	Y	Y1	Y	N	N	N	N	Y	Y	Y	N	N
	C	Y	Y1	Y	N	N	N	N	Y	Y	Y	N	N
	D	Y	Y1	Y	N	N	N	N	Y	Y	Y	N	N
	E	Y	Y1	Y	N	N	N	N	Y	Y	Y	N	N
	F	Y	Y1	Y	N	N	N	N	Y	Y	Y	N	N
	G	Y	Y1	Y	N	N	N	N	Y	Y	Y	N	N
	H	Y	Y1	Y	N	N	N	N	Y	Y	Y	N	N
	J	N	N	N	Y	Y	Y2	Y	N	N	N	Y	Y

Y1: Only AAC DHL serial range 9021 or higher allowed

Y2: 60.4"/61.5" ULD's may be possible after engineering lock adjustment.

Notes: Position J not usable on GJMCL due to fixed seat pallet.

UNCONTROLLED DOCUMENT (21 NOVEMBER 2024 16:37:15)

14. Loading and Un-Loading

14.1 Un-Loading Sequence

Step 1: Un-load the aft lower deck.

Step 2: Un-load the ULDs on the main deck in the following numbered sequence, **and respect standard stage un-loading method**.

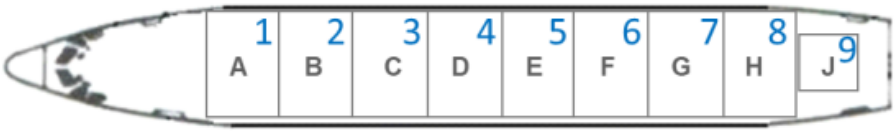

14.2 Loading Sequence

Step 1: Load the forward lower deck.

Step 2: Load the ULDs on the main deck in the following numbered sequence, **and respect standard stage loading method**.

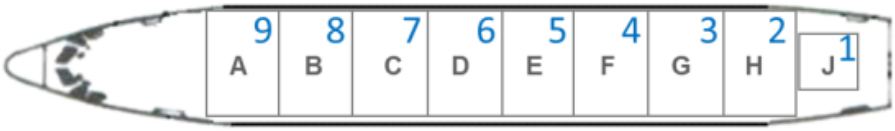

14.3 Loading Notes

14.3.1 Tail-Tipping

The B737-300SF is not susceptible to tail-tipping. Due care, however, must be taken whilst un-loading and loading the aircraft to prevent the Centre of Gravity moving to a position that would result in tail-tipping. Following the prescribed un-loading and loading sequence is therefore of paramount importance. Furthermore, care must be taken whilst loading the ULDs on the main-deck, moving them at a moderate pace up and down the aircraft to prevent a sudden CoG shift, which may result in a tail-tip situation.

14.3.2 Tail Post

Tail-post is not applicable for this aircraft type.

14.3.3 Parallel Dolly-train Un-load

Due to the limited clearance under the wing, parallel dolly-train un-load is not allowed on this aircraft type.

14.3.4 ULD Clearance

There is very limited clearance between some ULDs and the inner roof lining on this aircraft. ULDs, AAA and AAC/LAY especially, which are even slightly out of contour will impact the roof lining and cause damage. Due care must therefore be exercised when un-loading and loading this aircraft.

UNCONTROLLED DOCUMENT
UNCONTROLLED DOCUMENT

UNCONTROLLED DOCUMENT (21 NOVEMBER 2024 16:37:15)

14.3.5 Ballast ULD

If a ballast ULD is loaded on the aircraft, this shall not be removed by any member of staff unless they have received specific written instruction to do so from West Atlantic UK.

14.3.6 Opening the Main Cargo Door

Prior to opening the door on PEMCO converted B737's (G-JMCM / CO / CP / CT), the vent handle must first be activated by the ramp staff. The handle can be found towards the bottom left hand corner of the Main Cargo Door.

The vent handle shall only be accessed using a high loader positioned at the main cargo door (in accordance with GAPS C105.4.5) or by using crew stairs positioned at the L1 door (in accordance with GAPS C105.4.3).

SB01-18-02 (Global Safety – 3) for full details.

UNCONTROLLED DOCUMENT
UNCONTROLLED DOCUMENT

UNCONTROLLED DOCUMENT (21 NOVEMBER 2024 16:37:15)

15. Rigid, Oversized and Special Loads

For guidance on the handling of special loads, please refer to the Special Loads Regional Contact Instructions outlined in Chapter 6 **6.12.22.3 - Determining Loadability of Special Loads**. Where direct operator approval is required, the Regional Airside Team will liaise with Global Airside as needed.

15.1 Floating / Heavy Pallets

ULDs which are heavier than the standard allowed maximum gross weight may be loaded on the main deck on a floating position.

Permission must be sought from West Atlantic UK before accepting any ULDs which require loading on a floating position.

The permission, including a special loading instruction, will be granted only after all details concerning the load and the loading have been checked and clarified.

15.2 Crushable Cargo Requirements

Where Rigid Cargo has been identified, the first loaded position on the aircraft shall be loaded with Crushable Cargo ULDs suitable for protecting the barrier wall against unrestrained Rigid Cargo.

15.3 Piercing Cargo

Piercing cargo may not be loaded on the first and/or last loaded position on the aircraft.

15.4 Aircraft Engines

Aircraft engines should be loaded in Contour Zone II (Pos. B – H).

Loading of aircraft engines depends on size and weight. Biggest loadable engine type allowed onboard is the CFM56-3.

15.5 Live Animals

15.5.1 Horses

Max. Number of Horses per Aircraft	Total number of horses allowed is limited due to air conditioning restrictions. Maximum number of horses allowed is 15.
Max. Number of Horses per Box	-
Max. number of Horses per Groom	-
Approved Horse Transport ULDs	Horses must be transported using approved transport pallets.
Approved Loading Configurations	Config. 1

Notes: When horses are carried, a flight manager must be present to ensure flight safety.

UNCONTROLLED DOCUMENT (21 NOVEMBER 2024 16:37:15)

15.5.2 Other Live Animals

The following table provides a list of commonly transported animals. If there is a requirement to transport animals not listed below, contact your Special Loads Regional Contact.

	Main-Deck	FWD Hold	AFT Hold
Horses	Max 15*	No	
Day-old chickens	X		
Monkeys	X		
Pigs			
Cattle			
Sheep or Goats		X	
Dogs or Cats			
Small mammals or Birds			
Tropical Fish			
Reptiles or Amphibians			
Eels			
Crustaceans or Molluscs			
Bees			
Hatching eggs			

* Limited due to air conditioning and accessibility. Only the first container can be accessible, therefore carrying the maximum of 15 horses is only possible if horse container(s) can be walked through.

X: Depends on accessibility, air conditioning and flight duration. Contact your Special Loads Regional Contact. for more details.

UNCONTROLLED DOCUMENT
UNCONTROLLED DOCUMENT

UNCONTROLLED DOCUMENT (21 NOVEMBER 2024 16:37:15)

16. Restricted Commodities Loading

16.1 Radioactive (RRY), Magnetised (MAG) and Cargo Aircraft Only (CAO)

The following Dangerous Good type loading restrictions apply. The Dangerous Good type can be loaded on positions marked with a 'Y'. The Dangerous Good type cannot be loaded on positions marked with a 'N'.

	Position										
DG Type	A	B	C	D	E	F	G	H	J	FWD	AFT
MAG	N	N	N	N	N	N	N	Y	N	N	N
CAO	Y	Y	Y	Y	Y	Y	Y	Y	N	Y	Y
RRY (max. 40 TI combined)	N	N	N	N	N	Y	Y	Y	Y	N	N
RRY (max. 50 TI combined)	N	N	N	N	N	N	Y	Y	Y	N	N
RRY (max. 100 TI combined)	N	N	N	N	N	N	Y	Y	Y	N	N

Notes: Cargo Aircraft Only (CAO) can be loaded on any Main Deck position A to H provided they are loaded accessible. Accessible means that:

- The CAO is loaded on a pallet
- All positions forward of the CAO are loaded with 88" pallets with aisle

When loading Radioactive material (RRY), loading priority is position H and forward.

- Loading of 100TI must be spread evenly over Positions H and J (Max. 50 TI on each position)

16.2 Dry Ice

Please see the Global Supplementary Operational Document **Dry Ice Consolidation table** for the current maximum allowed Dry Ice limits.

Dry Ice (ICE) and Live Animals (AVI)

There is no weight limit for the loading of Dry Ice (ICE) together with Live Animals (AVI) on the Main-deck.

When loading AVI and ICE together in the main-deck, keep a minimum distance of one loading position, and load AVI forward of ICE.

Load the AVI higher than the ICE.

16.3 Lithium Batteries

Please see the Global Supplementary Operational Document **Lithium Battery Loadability Consolidation Table** for the current UN3480 Section IA/IB (RBI), UN3090 Section IA/IB (RBM), UN3481 Section I (RLI), UN3091 Section I (RLM) load ability limits.

UNCONTROLLED DOCUMENT (21 NOVEMBER 2024 16:37:15)

17. Messaging and Reporting

17.1 Messaging

Standard messaging rules apply.

17.2 Reporting

Standard reporting rules apply.

UNCONTROLLED DOCUMENT
UNCONTROLLED DOCUMENT

UNCONTROLLED DOCUMENT (21 NOVEMBER 2024 16:37:15)

18. Load Control Data

18.1 Standard Mass Additions

18.1.1 Additional Crew Members (ACM)

Maximum Number of ACMs:	3
Mass of ACM:	85 kg

18.1.2 Fly Away Kit (FAK) and Ballast

Fly Away Kit (FAK): Not as standard, see also note below.

Note: Only engine covers are loaded in hold 1 (included in DOW).

If operator (or maintenance provider) adds parts resulting in weight adjustments to the FAK, the overall responsibility shall be to the operator and their OCC to inform the respective station by email notification.

However, it is the responsibility of the ramp supervisor to verify on every flight and report major visible discrepancies to NCG.

Ballast: Not standard, but often required for ferry flights and then to be planned as additional weight as not included in the DOW/DOI.

18.2 Minimum Fuel and Standard Taxi Fuel

Minimum Fuel:	Not Applicable
Standard Taxi Fuel:	200 kg

18.3 LMC Restrictions

Computer Load sheet Maximum LMC:	+/- 200 kg
Manual Load sheet Maximum LMC:	+/- 500 kg

UNCONTROLLED DOCUMENT
UNCONTROLLED DOCUMENT

UNCONTROLLED DOCUMENT (21 NOVEMBER 2024 16:37:15)

19. Maximum Package Dimensions

19.1 Main Cargo Door

HEIGHT INCH	WIDTH (INCH) 5	10	20	30	40	50	60	70	80	88	100	108	125
	LENGTH (INCH)												
5	650	650	650	500	390	320	270	240	210	200	180	125	125
10	650	650	650	500	390	320	270	240	210	200	180	125	125
20	650	650	650	480	380	310	260	230	200	190	170	125	125
30	650	650	650	480	380	310	260	230	200	190	170	125	125
40	650	650	560	430	350	290	250	220	190	180	160	125	125
50	650	650	560	430	350	290	250	220	190	180	160	125	125
60	650	650	460	360	300	250	220	200	170	160	140	125	125
70	650	650	370	300	250	220	190	170	*	*	*	*	*
80	650	650	290	240	200	180	160	*	*	*	*	*	*

19.2 Forward Lower-deck hold

LIGHT PACKAGES HAND MANEUVERED[a]									
HEIGHT IN.	WIDTH IN. 5	10	15	20	25	30	35	40	45
	LENGTH IN.								
5	175	143	121	106	95	84	74	65	58
10	155	132	116	105	95	84	74	65	58
12	150	130	116	105	95	84	74	65	58
14	147	129	115	105	95	84	74	65	58
16	144	127	115	105	95	84	74	65	58
18	142	126	115	105	95	84	74	65	58
20	140	126	115	105	95	84	74	65	58
22	139	125	115	105	95	84	74	65	58
24	138	125	115	105	95	84	74	65	58
26	137	125	115	105	95	84	74	65	58
28	137	125	115	105	95	84	74	65	58
30	136	125	115	105	95	84	74	65	58
32	136	125	115	105	95	84	74	65	58
34	136	125	115	105	95	84	74	65	58

[a] Package length is limited to a maximum of 85 inches when transverse cargo nets are installed.

UNCONTROLLED DOCUMENT
UNCONTROLLED DOCUMENT

UNCONTROLLED DOCUMENT (21 NOVEMBER 2024 16:37:15)

19.3 Aft lower-deck hold

LIGHT PACKAGES HAND MANEUVERED[a]									
HEIGHT IN.	WIDTH IN.								
	5	10	15	20	25	30	35	40	45
	LENGTH IN.								
5	247	184	147	123	106	93	83	73	65
10	192	157	133	116	104	93	83	73	65
12	182	151	130	115	104	93	83	73	65
14	174	147	128	114	104	93	83	73	65
16	168	144	127	114	104	93	83	73	65
18	164	142	126	114	104	93	83	73	65
20	160	140	125	114	104	93	83	73	65
22	157	138	124	114	104	93	83	73	65
24	155	137	124	114	104	93	83	73	65
26	153	137	124	114	104	93	83	73	65
28	152	136	124	114	104	93	83	73	65
30	151	135	124	114	104	93	83	73	65
32	150	135	124	114					
34	149	135	124	114					

[a] Package length is limited to a maximum of 161 inches when transverse cargo nets are installed.

Note:

Multiply numbers by 2.54 to get centimetres

UNCONTROLLED DOCUMENT

UNCONTROLLED DOCUMENT

UNCONTROLLED DOCUMENT (21 NOVEMBER 2024 16:37:15)