UNCONTROLLED DOCUMENT

UNCONTROLLED DOCUMENT

NPT B734SF
West Atlantic UK B737-400SF

Revision: 4
Date: 07 October 2024

1 West Atlantic Boeing 737-400SF Registrations
2 Aircraft Dimensions
3 Aircraft Servicing Points and Specifications
4 Ground Support Equipment
5 Standard Turnaround Times
6 Safety Areas
7 Strong Wind Conditions
8 Aircraft Door Dimensions
9 Compartment Classification and Air-Conditioning
10 Aircraft Cabin Contour Dimensions
11 Maximum Position Weights
12 Aircraft ULD Compatibility
13 Loading and Un-Loading
14 Rigid, Oversized and Special Loads
15 Restricted Commodities Loading
16 Messaging and Reporting
17 Load Control Data
18 Maximum Package Dimensions

UNCONTROLLED DOCUMENT (07 OCTOBER 2024 10:45:46)

Page	Date	Comment
2	07 October 2024	Registration GJMCV removed. *(Minor)*
16	07 October 2024	ULD types no longer available in the DHL network removed. *(Minor)*
19	07 October 2024	Guidance on the handling of special loads information added. *(Minor)*

UNCONTROLLED DOCUMENT

UNCONTROLLED DOCUMENT

1. West Atlantic Boeing 737-400SF Registrations

IATA Designator: -

ICAO Designator: NPT

Valid for: **GCKUZ, GJMCY, GJMCJ, GJMCH, GJMCS, GJMCX, GNPTY, GNPTZ, GNPTX.**

Note: Aircraft contained within this entry have been converted by different companies and may have different characteristics. Where differences occur, the applicable aircraft registrations will be displayed at the top of the sub-chapter header.

UNCONTROLLED DOCUMENT
UNCONTROLLED DOCUMENT

UNCONTROLLED DOCUMENT

2. Aircraft Dimension

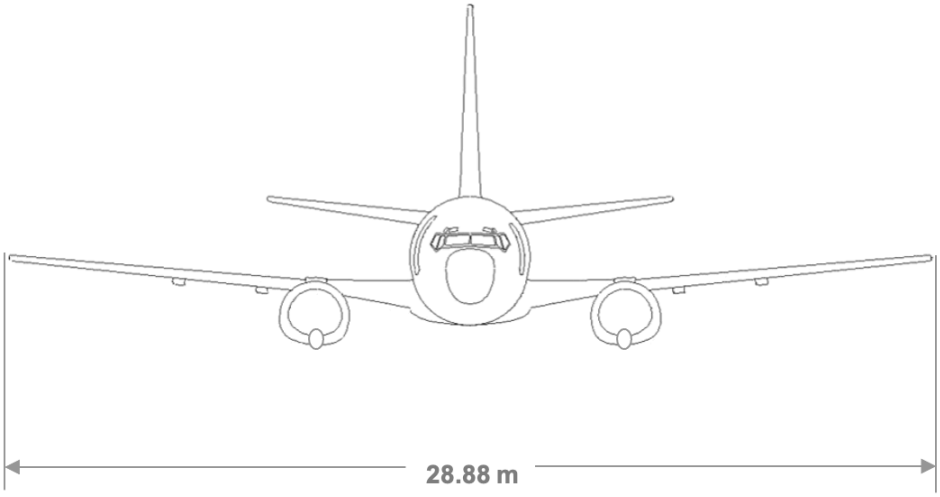

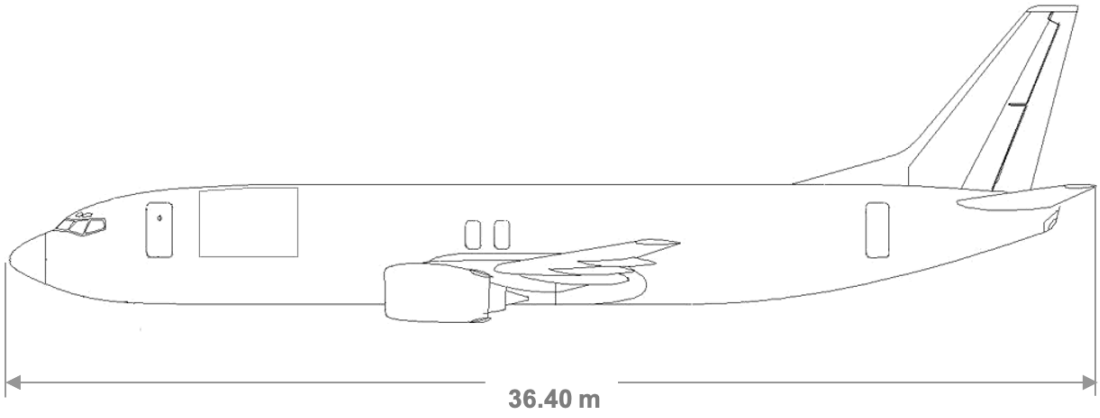

UNCONTROLLED DOCUMENT

UNCONTROLLED DOCUMENT

UNCONTROLLED DOCUMENT (07 OCTOBER 2024 10:45:46)

UNCONTROLLED DOCUMENT

UNCONTROLLED DOCUMENT

UNCONTROLLED DOCUMENT

3. Aircraft Servicing Points and Specifications

3.1 Servicing Points

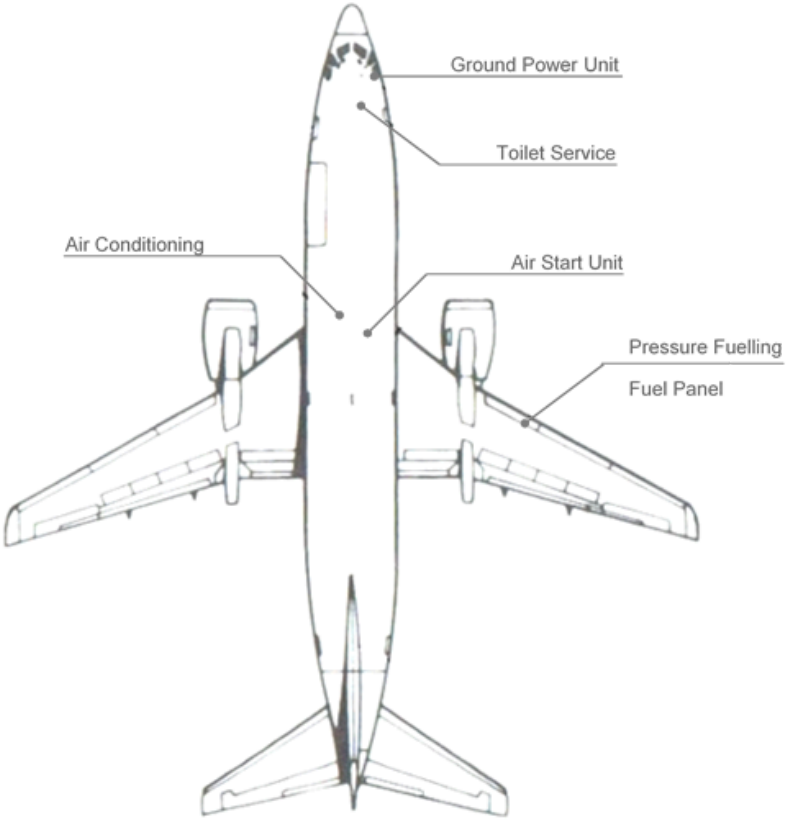

3.2 Servicing Specifications

System	Requirements	Notes
Ground Power Unit	115/200V AC / 60 kVA / 400 Hz	
Fuel	Jet A1	Fuel Control Panel **on RH wing only**
Air Condition Unit	Maximum Flow Rate 210 ppm	1 ACU inlet available
Air Start Unit	Minimum Capacity 120-145 ppm Max. / Min. pressure 45 / 30 psi	1 ASU inlet available.

UNCONTROLLED DOCUMENT (07 OCTOBER 2024 10:45:46)

4. Ground Support Equipment

4.1 Positioning of GSE

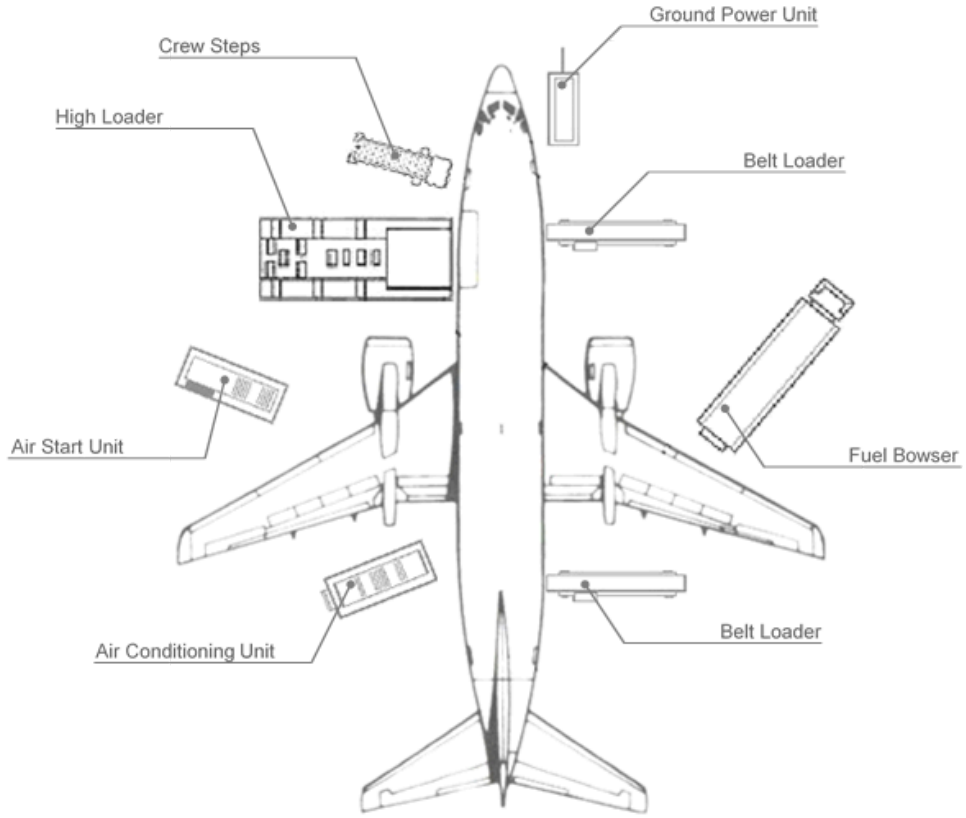

4.2 GSE Requirements

GSE	Type	Quantity
High Loader	Standard	1
Crew stairs	Platform height 2.62 – 2.77 meters	1
Ground Power Unit	Diesel, Electric or Ground-Power	1
Air Start Unit	Standard	1
Belt Loader	Standard	1 or 2
Tractor	N/A	4
Dolly Wagon Main-deck	125”/88” & 60.5”/61.4” capable	Up to 11
Belly Container / Wagon	As required	According to load

UNCONTROLLED DOCUMENT
UNCONTROLLED DOCUMENT

UNCONTROLLED DOCUMENT (07 OCTOBER 2024 10:45:46)

UNCONTROLLED DOCUMENT

4.3 Chocking during Push-back

Push-back with Tow Bar

On completion of push-back and once the aircraft crew has confirmed the parking brakes are set, chocks shall be placed in front of the nose gear wheel. The chocks shall be removed only when the tow bar has been disconnected from the aircraft and the steering bypass pin removed.

Push-back with Tow Bar-less

On completion of push-back using a Tow Bar-less tractor, the aircraft crew shall confirm that the parking brakes are set, after which the tractor shall pull away in front of the aircraft. Once the tractor has pulled away, chocks shall be placed in front of the nose gear wheel. The chocks shall be removed only when the steering bypass pin has been removed.

UNCONTROLLED DOCUMENT

UNCONTROLLED DOCUMENT

UNCONTROLLED DOCUMENT (07 OCTOBER 2024 10:45:46)

5. Standard Turnaround Times

Turn-around time for a transit stop:	00:35 hour (partial off- and on-load)
Turn-around time for an end stop:	00:50 hour (full off- and on-load)

UNCONTROLLED DOCUMENT
UNCONTROLLED DOCUMENT

UNCONTROLLED DOCUMENT

6. Safety Areas

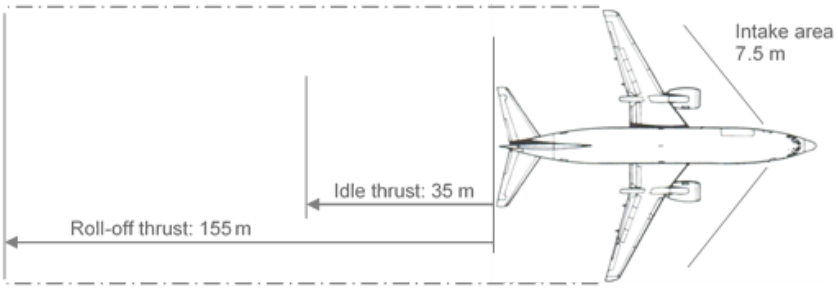

UNCONTROLLED DOCUMENT

UNCONTROLLED DOCUMENT

UNCONTROLLED DOCUMENT (07 OCTOBER 2024 10:45:46)

UNCONTROLLED DOCUMENT

7. Strong Wind Conditions

If the wind conditions on the ramp reach the following speeds, the corresponding actions shall be taken.

Wind Speed	Action
Up to 45 knots	Normal Operations: All doors can be opened and left open
More than 45 knots	Do not open additional doors
More than 45 knots	All open doors shall be closed immediately

UNCONTROLLED DOCUMENT

UNCONTROLLED DOCUMENT

UNCONTROLLED DOCUMENT (07 OCTOBER 2024 10:45:46)

UNCONTROLLED DOCUMENT

8. Aircraft Door Dimensions

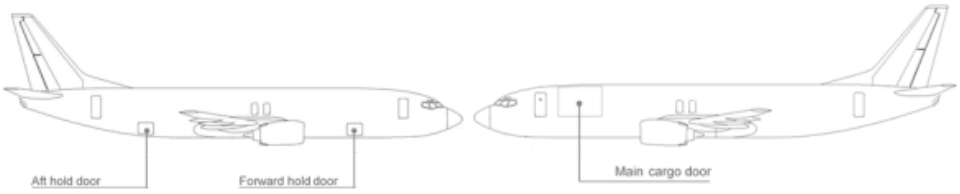

Door width, height, and sill height are defined as follows.

(This drawing is for illustration purposes only and may not be an exact representation of this aircraft type)

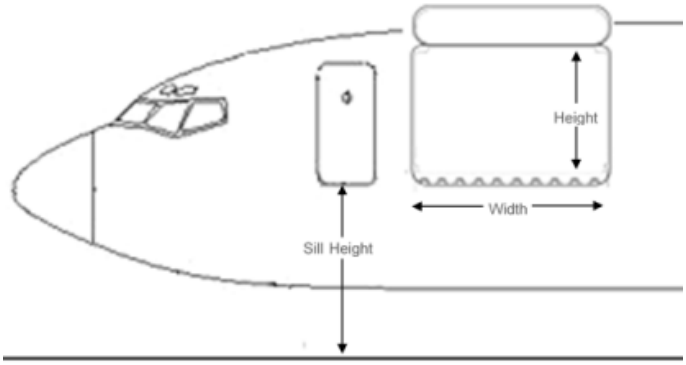

All dimensions are in centimetres (cm).

Valid for registrations: **GCKUZ, GJMCY, GJMCJ, GJMCH, GJMCS, GJMCX, GNPTX**

Door	Door Width	Door Height	Min. Door Sill Height	Max. Door Sill Height
Crew Door	-	-	262	277
Main Deck	348	216	265	280
Forward Hold	121	89	127	140
Aft Hold	121	79	137	137

Valid for registrations: **GNPTY, GNPTZ**

Door	Door Width	Door Height	Min. Door Sill Height	Max. Door Sill Height
Crew Door	-	-	262	277
Main Deck	348	205	265	280
Forward Hold	121	89	127	140
Aft Hold	121	79	137	137

Note: The Main Deck door on GNPTY and GNPTZ is located further forward on the fuselage compared to the other aircraft registrations. As a result, the door is angled, and the forward side is lower. The above height measurement is at the lower forward side.

UNCONTROLLED DOCUMENT (07 OCTOBER 2024 10:45:46)

UNCONTROLLED DOCUMENT

9. Compartment Classification and Air-Conditioning

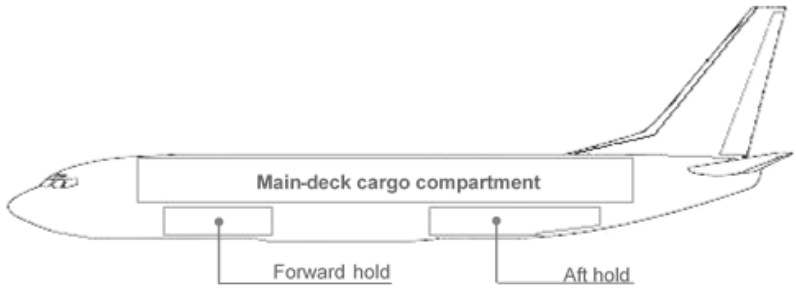

9.1 Compartment Classification

Compartment		Features
Main-deck	Position A loaded with 88" ULD **with** 50 cm (18") aisle	- Classification B
		- Pressurisation
		- Smoke Detection
		- Accessible during flight
	Position A loaded with 88" ULD **without** 50 cm (18") aisle	- Classification E
		- Pressurisation
		- Smoke Detection
		- In-accessible during flight
Lower-deck All Compartments		- Classification C
		- Pressurisation
		- Smoke Detection
		- Fire Suppression
		- In-accessible during flight

9.2 Air-Conditioning

	Main-deck	Forward Hold	Aft Hold
Temperature	1C to 22C	Max 3C*	Max 3C*
Heating	Yes	No	
Heat adjust			
Cooling			
Ventilation		Yes	

*Temperature in the Forward and Aft Holds depend on the Main-deck heating but will never be more than 3C.

UNCONTROLLED DOCUMENT (07 OCTOBER 2024 10:45:46)

10. Aircraft Cabin Contour Dimensions

10.1 Aircraft Layout Type 1

Valid for registrations: **GCKUZ, GJMCY, GJMCJ, GJMCH, GJMCS, GJMCX, GNPTX**

The aircraft is divided into two contour zones: CI & C2.

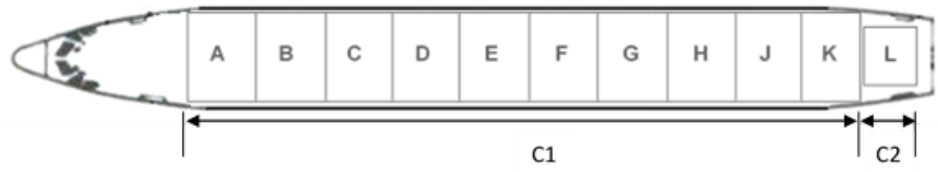

10.1.1 Contour C1

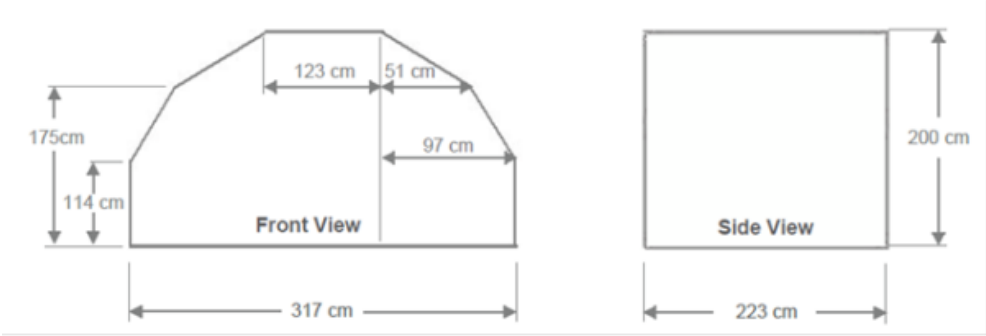

10.1.2 Contour C2



10.2 Aircraft Layout Type 2

Valid for registrations: **GNPTY, GNPTZ**

The aircraft is divided into four contour zones: I, II, III, IV.

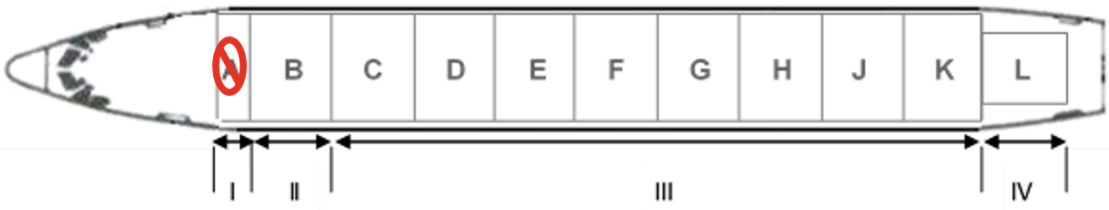

UNCONTROLLED DOCUMENT (07 OCTOBER 2024 10:45:46)

UNCONTROLLED DOCUMENT

UNCONTROLLED DOCUMENT

UNCONTROLLED DOCUMENT

10.2.1 Contour I

Position A is unused on these aircraft.

10.2.2 Contour II

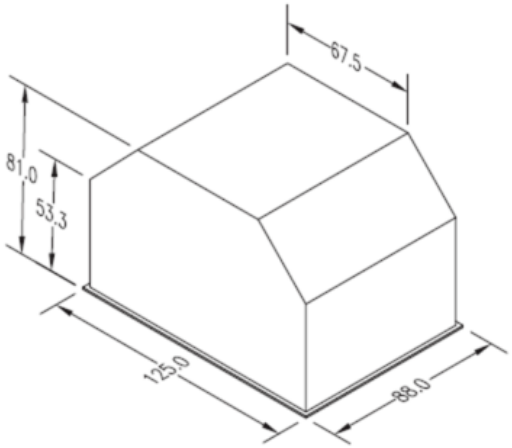

10.2.3 Contour III

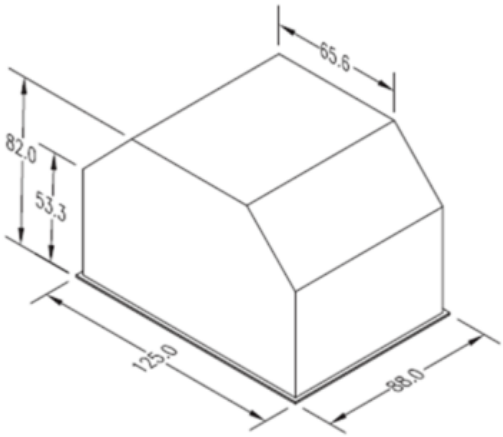

10.2.4 Contour IV

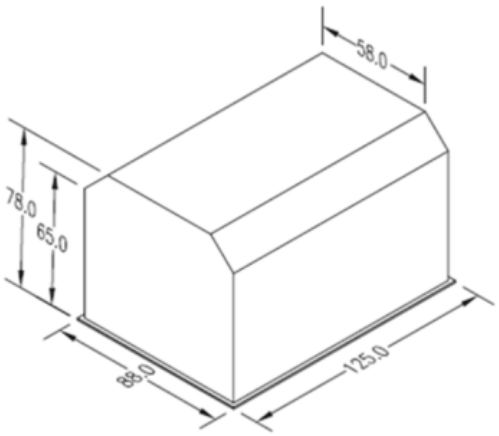

UNCONTROLLED DOCUMENT (07 OCTOBER 2024 10:45:46)

UNCONTROLLED DOCUMENT

11. Maximum Position Weights

11.1 Maximum Main-deck ULD Weights in Kilograms

Valid for registrations: **GCKUZ, GJMCY, GJMCJ, GJMCH, GJMCS, GJMCX, GNPTX**

	ULD Position										
ULD Size	A	B	C	D	E	F	G	H	J	K	L
125”/ 88”	1814	2948			3628		2948			1700	
108”/88”	1542	2041			2494		2041			1700	
61.5”/60.4											1020

Valid for registrations: **GNPTY, GNPTZ**

	ULD Position										
ULD Size	A	B	C	D	E	F	G	H	J	K	L
125”/ 88”		2721			4173		2721				2268
108”/27”	453										

Position A is unused on these aircraft.

11.2 Maximum Total Main-deck Load

9G Barrier Limit: 20.865 Kg

11.3 Maximum Lower-deck Compartment Weights in Kilograms

	Forward hold		Aft hold	
Compartment	1	2	3	4
Max. Weight per section	1245	2059	3062	1125
Max. Weight per Hold	3304		4187	
Volume (m3)	6.2	11	17.4	4.3
Volume (m3) per Hold	17.2		21.7	
Max. floor Loading	733 kg/m2 (150 lbs/sq ft)			

UNCONTROLLED DOCUMENT (07 OCTOBER 2024 10:45:46)

UNCONTROLLED DOCUMENT

12. Aircraft ULD Compatibility

12.1 Aircraft Layout

Valid for Registrations: **GCKUZ, GJMCY, GJMCJ, GJMCH, GJMCS, GJMCX, GNPTX**



Configuration 1: 10 x Lateral 125”/88” and 1 x 60.4”/61.5” or 88”/53"

Valid for registrations: **GNPTY, GNPTZ**



Configuration 1: 9 x Lateral 125”/88” and 1 X Longitudinal 125"" /88"

UNCONTROLLED DOCUMENT

UNCONTROLLED DOCUMENT

UNCONTROLLED DOCUMENT (07 OCTOBER 2024 10:45:46)

12.2 ULD Compatibility Table

The following ULD type loading restrictions apply. The ULD type can be loaded on positions marked with a 'Y'. The ULD type cannot be loaded on positions marked with a 'N'.

		ULD Type												
	Pos	AAA	AAC	AAJ	AEH	AEP	AKE	LAK	LAY	PAG	PEA	PEB	RKN	RKE
Configuration 1: GJMCY, GJMCJ, GJMCH, GJMCS, GJMCX, GNPTX	A	Y	Y1	Y	N	N	N	Y	Y	Y	N	N	N	N
	B	Y	Y1	Y	N	N	N	Y	Y	Y	N	N	N	N
	C	Y	Y1	Y	N	N	N	Y	Y	Y	N	N	N	N
	D	Y	Y1	Y	N	N	N	Y	Y	Y	N	N	N	N
	E	Y	Y1	Y	N	N	N	Y	Y	Y	N	N	N	N
	F	Y	Y1	Y	N	N	N	Y	Y	Y	N	N	N	N
	G	Y	Y1	Y	N	N	N	Y	Y	Y	N	N	N	N
	H	Y	Y1	Y	N	N	N	Y	Y	Y	N	N	N	N
	J	Y	Y1	Y	N	N	N	Y	Y	Y	N	N	N	N
	K	Y	Y1	Y	N	N	N	Y	Y	Y	N	N	N	N
	L	N	N	N	Y	Y	Y	N	N	N	Y	Y	Y	Y
Configuration 1: GNPTY, GNPTZ	B	Y	Y1	Y	N	N	N	Y	Y	Y	N	N	N	N
	C	Y	Y1	Y	N	N	N	Y	Y	Y	N	N	N	N
	D	Y	Y1	Y	N	N	N	Y	Y	Y	N	N	N	N
	E	Y	Y1	Y	N	N	N	Y	Y	Y	N	N	N	N
	F	Y	Y1	Y	N	N	N	Y	Y	Y	N	N	N	N
	G	Y	Y1	Y	N	N	N	Y	Y	Y	N	N	N	N
	H	Y	Y1	Y	N	N	N	Y	Y	Y	N	N	N	N
	J	Y	Y1	Y	N	N	N	Y	Y	Y	N	N	N	N
	K	Y	Y1	Y	N	N	N	Y	Y	Y	N	N	N	N
	L	N	N	Y	N	N	N	Y	N	Y	N	N	N	N

Y1: Only AAC serial range 9021 & higher allowed

UNCONTROLLED DOCUMENT
UNCONTROLLED DOCUMENT

UNCONTROLLED DOCUMENT (07 OCTOBER 2024 10:45:46)

13. Loading and Un-Loading

13.1 Un-Loading Sequence

Step 1: Un-load the aft lower deck.

Step 2: Un-load the ULDs on the main deck in the following numbered sequence, **and respect standard stage un-loading method**.

Valid for Registrations: **GCKUZ, GJMCY, GJMCJ, GJMCH, GJMCS, GJMCX, GNPTX**



Valid for registrations: **GNPTY, GNPTZ**



Step 3: Un-load the forward lower deck.

13.2 Loading Sequence

Step 1: Load the forward lower deck.

Step 2: Load the ULDs on the main deck in the following numbered sequence, **and respect standard stage loading method**.

Valid for Registrations: **GJMCY, GJMCJ, GJMCH, GJMCS, GJMCX, GNPTX**



Valid for registrations: **GNPTY, GNPTZ**



Step 3: Load the aft lower deck.

UNCONTROLLED DOCUMENT
UNCONTROLLED DOCUMENT

UNCONTROLLED DOCUMENT (07 OCTOBER 2024 10:45:46)

UNCONTROLLED DOCUMENT

13.3 Loading Notes

13.3.1 Tail-Tipping

This aircraft type is susceptible to tail-tipping. To prevent tail-tipping due to a sudden CoG shift, the prescribed un-loading and loading sequences must be strictly adhered to and ULDs must be moved on the aircraft at a slow pace.

13.3.2 Tail Post

This aircraft type is not fitted for or does not require a tail post.

13.3.3 Parallel Dolly-train Un-load

Parallel dolly-train un-load is not permitted.

13.3.4 ULD Clearance



There is very limited clearance between some ULDs and the inner roof lining on this aircraft. ULDs, AAA and AAC/LAY especially, which are even slightly out of contour will impact the roof lining and cause damage. Due care must therefore be exercised when un-loading and loading this aircraft.

13.3.5 Ballast ULD

If a ballast ULD is loaded on the aircraft, this shall not be removed by any member of staff without specific documented instruction to do so from the operator.

13.3.6 Accessing the Main Cargo Door Vent Handle

The vent handle on PEMCO converted B737 aircraft shall only be accessed using a high loader positioned at the main cargo door or by using crew stairs positioned at the L1 door.

UNCONTROLLED DOCUMENT

UNCONTROLLED DOCUMENT

UNCONTROLLED DOCUMENT (07 OCTOBER 2024 10:45:46)

UNCONTROLLED DOCUMENT

14. Rigid, Oversized and Special Loads

For guidance on the handling of special loads, please refer to the Special Loads Regional Contact Instructions outlined in Chapter 6 **6.12.22.3 - Determining Loadability of Special Loads**. Where direct operator approval is required, the Regional Airside Team will liaise with Global Airside as needed.

14.1 Floating / Heavy Pallets

ULDs which are heavier than the standard allowed maximum gross weight may be loaded on the main deck on a floating position.

Permission must be sought from your Special Loads Regional contact before accepting any loads which require loading on a floating position.

14.2 Crushable Cargo Requirements

If Rigid cargo is loaded on the aircraft, the first loaded position on the aircraft must be occupied with a Crushable Cargo loaded ULD suitable for protecting the barrier wall against unrestrained Rigid Cargo.

14.3 Piercing Cargo

Piercing cargo may not be loaded on the first and last loaded position on the aircraft.

14.4 Aircraft Engines

Aircraft engines shall be loaded in positions B-K only.

The ability to load aircraft engines depends on actual size and weight. The biggest engine which can be loaded on this aircraft is the CFM56-3.

Permission must be sought from your Special Loads Regional contact before accepting aircraft engines of any type.

UNCONTROLLED DOCUMENT

UNCONTROLLED DOCUMENT

UNCONTROLLED DOCUMENT (07 OCTOBER 2024 10:45:46)

UNCONTROLLED DOCUMENT

14.5 Live Animals

14.5.1 Horses

Horses shall not be loaded on this aircraft.

14.5.2 Other Live Animals

The following table provides a list of commonly transported animals. If there is a requirement to transport animals not listed below, contact your Special Loads Regional contact.

<table>
<tr><th></th><th>Main-Deck</th><th>FWD Hold</th><th>AFT Hold</th></tr>
<tr><td>Horses</td><td>No</td><td rowspan="4" colspan="2">No</td></tr>
<tr><td>Day-old chickens</td><td>X</td></tr>
<tr><td>Monkeys</td><td rowspan="12">X</td></tr>
<tr><td>Pigs</td></tr>
<tr><td>Cattle</td><td rowspan="12" colspan="2">X</td></tr>
<tr><td>Sheep or Goats</td></tr>
<tr><td>Dogs or Cats</td></tr>
<tr><td>Small mammals or Birds</td></tr>
<tr><td>Tropical Fish</td></tr>
<tr><td>Reptiles or Amphibians</td></tr>
<tr><td>Eels</td></tr>
<tr><td>Crustaceans or Molluscs</td></tr>
<tr><td>Bees</td></tr>
<tr><td>Hatching eggs</td></tr>
</table>

X: Depends on accessibility, air conditioning and flight duration. Contact your Special Loads Regional contact for more details.

UNCONTROLLED DOCUMENT

UNCONTROLLED DOCUMENT (07 OCTOBER 2024 10:45:46)

15. Restricted Commodities Loading

15.1 Radioactive (RRY), Magnetised (MAG) and Cargo Aircraft Only (CAO)

The following Dangerous Good type loading restrictions apply. The Dangerous Good type can be loaded on positions marked with a 'Y'. The Dangerous Good type cannot be loaded on positions marked with a 'N'.

	Position												
DG Type	A	B	C	D	E	F	G	H	J	K	L	FWD	AFT
MAG	N	N	N	N	N	N	N	N	N	Y	Y	N	N
CAO	Y	Y	Y	Y	Y	Y	Y	Y	Y	Y	N	Y	Y
RRY (max. 50 TI combined)	N	N	Y	Y	Y	Y	Y	Y	Y	Y	Y	N	N
RRY (max. 200 TI combined)	N	N	N	N	Y	Y	Y	Y	Y	Y	Y	N	N

Note: Cargo Aircraft Only (CAO) can be loaded on any Main Deck position A to K provided they are loaded accessible. Accessible means that:

- The CAO is loaded on a pallet
- All positions forward of the CAO are loaded with 88" pallets with aisle

15.2 Dry Ice

Please see the Global Supplementary Operational Document **Dry Ice Consolidation table** for the current maximum allowed Dry Ice limits.

Dry Ice (ICE) and Live Animals (AVI)

There is no weight limit for the loading of Dry Ice (ICE) together with Live Animals (AVI) on the Main-deck.

15.3 Lithium Batteries

Please see the Global Supplementary Operational Document **Lithium Battery Loadability Consolidation Table** for the current UN3480 Section IA/IB (RBI), UN3090 Section IA/IB (RBM), UN3481 Section I (RLI), UN3091 Section I (RLM) load ability limits.

UNCONTROLLED DOCUMENT
UNCONTROLLED DOCUMENT

UNCONTROLLED DOCUMENT (07 OCTOBER 2024 10:45:46)

UNCONTROLLED DOCUMENT

16. Messaging and Reporting

16.1 Messaging

Standard messaging rules apply.

16.2 Reporting

Standard reporting rules apply.

UNCONTROLLED DOCUMENT

UNCONTROLLED DOCUMENT

UNCONTROLLED DOCUMENT (07 OCTOBER 2024 10:45:46)

UNCONTROLLED DOCUMENT

17. Load Control Data

17.1 Standard Mass Additions

17.1.1 Additional Crew Members (ACM)

Maximum Number of ACMs:	6
Mass of ACM:	85 kg

17.1.2 Fly Away Kit (FAK) and Ballast

Fly Away Kit (FAK): Not as standard, see also note below.

Note: Only engine covers are loaded in hold 1 (included in DOW).

If operator (or maintenance provider) adds parts resulting in weight adjustments to the FAK, the overall responsibility shall be to the operator and their OCC to inform the respective station by email notification.

However, it is the responsibility of the ramp supervisor to verify on every flight and report major visible discrepancies to NCG.

Ballast: Not as standard, but often required for ferry flights and then to be planned as additional weight as not included in the DOW/DOI.

17.2 Minimum Fuel and Standard Taxi Fuel

Minimum Fuel:	Not Applicable
Standard Taxi Fuel:	200 kg

17.3 LMC Restrictions

Computer Load sheet Maximum LMC:	+/- 200 kg
Manual Load sheet Maximum LMC:	+/- 500 kg

17.4 Minimum Flight Weight

Minimum flight weight: 35318 kg

For ferry flights, the following ballast payload shall be required:

- 2200 Kg on position J (For registrations GJMCZ, GJMCY, GJMCJ, GJMCB, GJMCH, GJMCS, GJMCX, GNPTX)
- 1800 Kg on position L (For registrations GNPTY and GNPTZ)

UNCONTROLLED DOCUMENT (07 OCTOBER 2024 10:45:46)

18. Maximum Package Dimensions

18.1 Main Cargo Door

AFT PALLET UPRIGHT LOADING THROUGH MAIN CARGO DOOR

	WIDTH (IN.)												
	5	15	25	35	45	55	65	75	85	95	105	115	125
HEIGHT (IN.)	LENGTH (IN.)												
83	321	267	230	202	181	164	151						
80	383	311	263	228	202	181	165	152					
76	468	367	303	258	226	201	181	166	153				
72	565	426	343	288	249	219	197	178	164	152			
68	654	478	377	312	267	234	208	188	172	158			
64	772	540	417	340	287	249	221	198	180	165	153		
60	880	594	449	362	303	262	230	206	187	171	158	147	
56	905	657	486	386	321	275	241	214	193	176	162	151	
52	905	701	511	402	332	283	247	219	197	180	165	153	143
48	905	701	511	402	332	283	247	219	197	180	165	153	143
44	905	701	511	402	332	283	247	219	197	180	165	153	143
40	905	701	511	402	332	283	247	219	197	180	165	153	143
36	905	701	511	402	332	283	247	219	197	180	165	153	143
32	905	701	511	402	332	283	247	219	197	180	165	153	143
28	905	701	511	402	332	283	247	219	197	180	165	153	143
24	905	701	511	402	332	283	247	219	197	180	165	153	143
20	905	701	511	402	332	283	247	219	197	180	165	153	143
16	905	701	511	402	332	283	247	219	197	180	165	153	143
12	905	701	511	402	332	283	247	219	197	180	165	153	143
8	905	701	511	402	332	283	247	219	197	180	165	153	143
4	905	701	511	402	332	283	247	219	197	180	165	153	143
2	905	701	511	402	332	283	247	219	197	180	165	153	143

NOTE: Subtract roller height and pallet thickness if applicable.

UNCONTROLLED DOCUMENT
UNCONTROLLED DOCUMENT

UNCONTROLLED DOCUMENT (07 OCTOBER 2024 10:45:46)